FED. ROAD DIST. NO.	STATE	FED. AID PROJ. NO.	FISCAL YEAR	SHEET NO.	TOTAL SHEETS
HAWAII	HAW.				

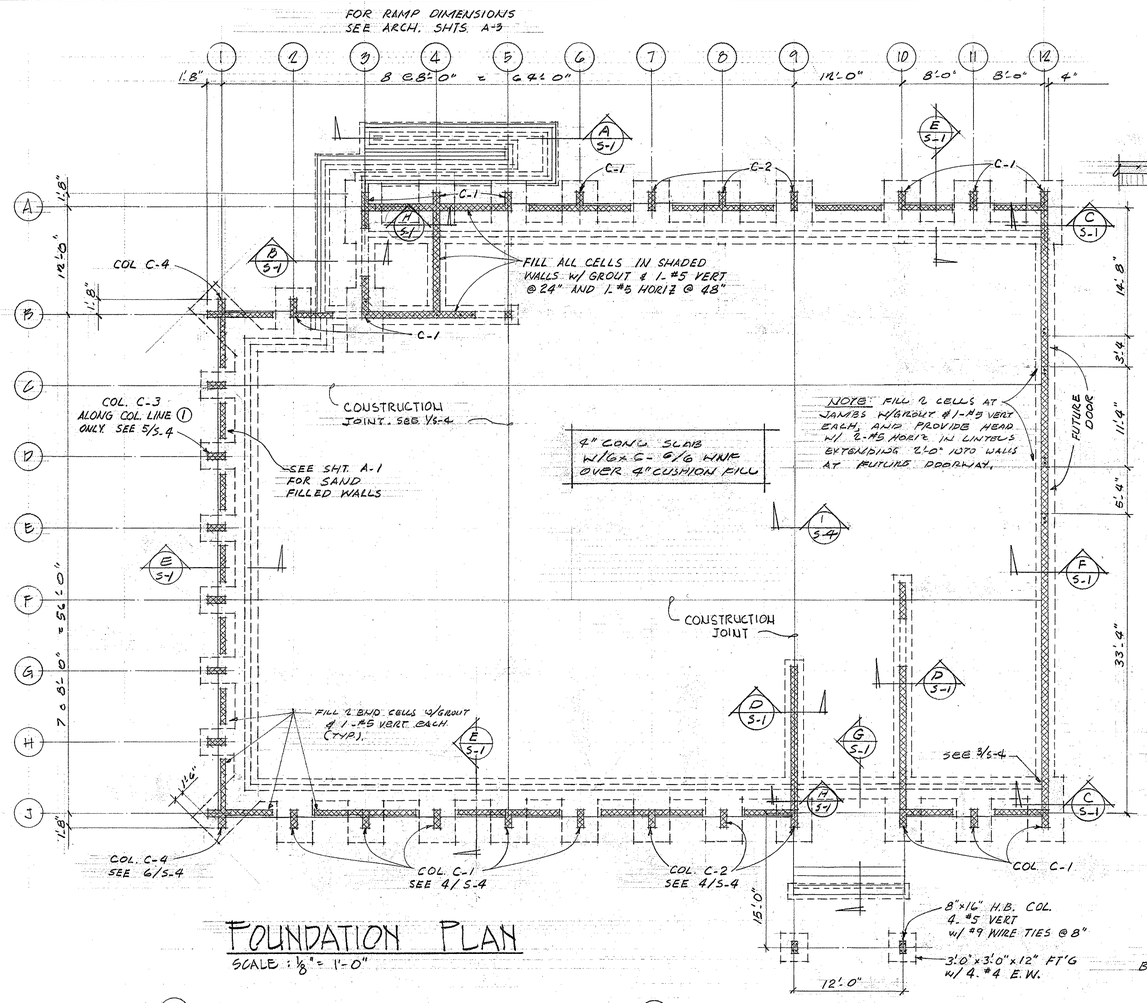

FOUNDATION PLAN

SCALE: 1/8" = 1'-0"

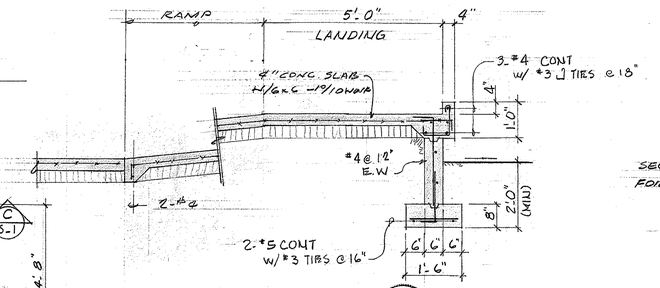

SECTION A S-1

SCALE: 1/2" = 1'-0"

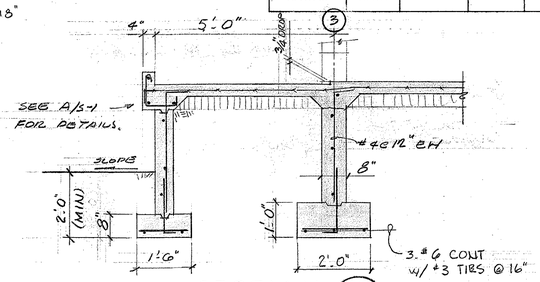

SECTION B S-1

SCALE: 1/2" = 1'-0"

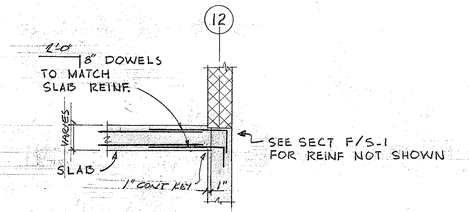

SECTION C S-1

SCALE: 1/2" = 1'-0"

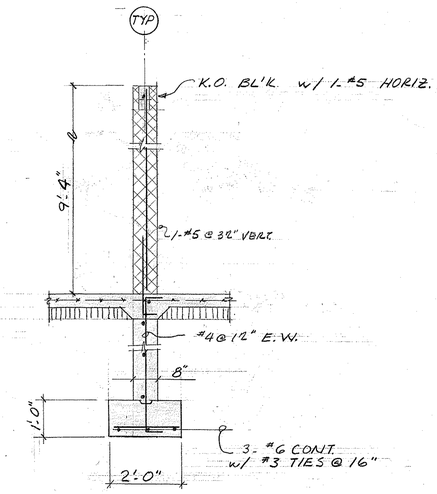

TYP. @ INTERIOR 8" C.M.U. WALLS

SECTION D S-1

SCALE: 1/2" = 1'-0"

NOTE

ALL STRUCTURAL FILL SHALL BE PLACED AND COMPACTED TO AN EXTENT OF 5'-0" BEYOND THE EXTERIOR WALL LINES BEFORE EXCAVATING FOR THE FOOTINGS.

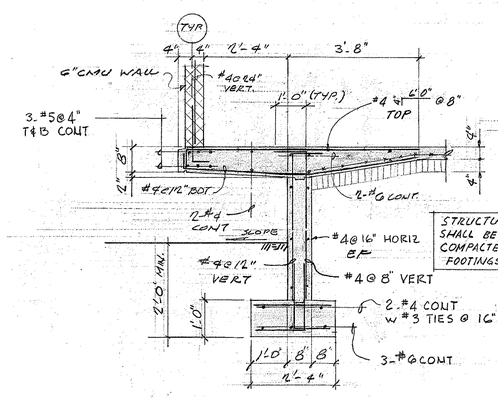

SECTION E S-1

SCALE: 1/2" = 1'-0"

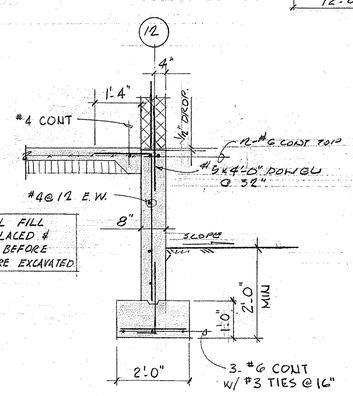

STRUCTURAL FILL SHALL BE PLACED & COMPACTED BEFORE FOOTINGS ARE EXCAVATED

SECTION F S-1

SCALE: 1/2" = 1'-0"

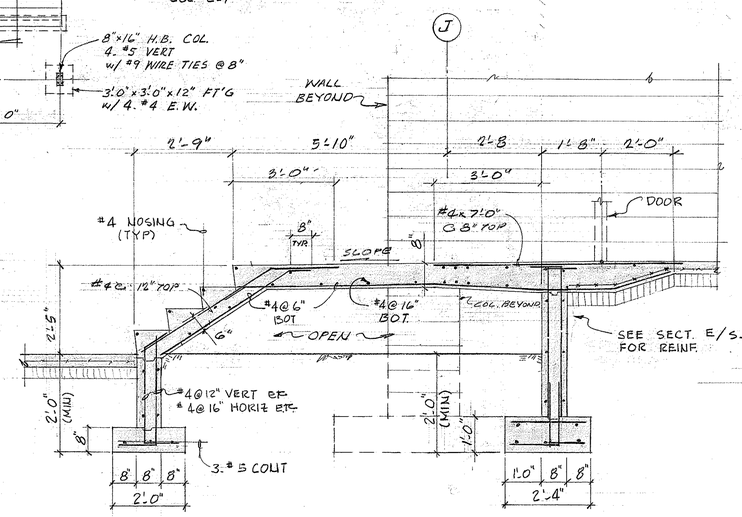

SECTION G S-1

SCALE: 1/2" = 1'-0"

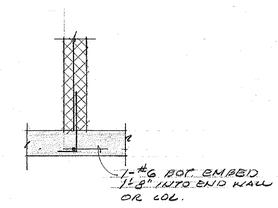

SECTION H S-1

1/2" = 1'-0"

ADMINISTRATION BUILDING

STATE OF HAWAII
DEPARTMENT OF TRANSPORTATION
HIGHWAYS DIVISION

OAHU DISTRICT BASEYARD FACILITIES
SHAFTER PLATS INDUSTRIAL DEVELOPMENT
AT MOANALUA, HONOLULU, OAHU, HAWAII

FOUNDATION PLAN & DETAILS

HAROLD TAKASHI MIYAMOTO REGISTERED PROFESSIONAL ENGINEER No. 1514 HAWAII, U.S.A.

THIS WORK WAS PREPARED BY ME OR UNDER MY SUPERVISION

HERBERT Y. MATSUMURA ARCHITECT A.I.A.
871 KAPIOLANI BLVD. HONOLULU, HAWAII

SHEET No. S-1 OF 42 SHEETS

ORIGINAL PLAN	SURVEY PLOTTED BY	DATE
	DRAWN BY	" " " "
	TRACED BY	" " " "
NOTE BOOK	DESIGNED BY	
	QUANTITIES BY	
No.	CHECKED BY	

PRINTED ON NO. 1000H CLEARPRINT

FED. ROAD DIST. NO.	STATE	FED. AID PROJ. NO.	FISCAL YEAR	SHEET NO.	TOTAL SHEETS
HAWAII	HAW.				

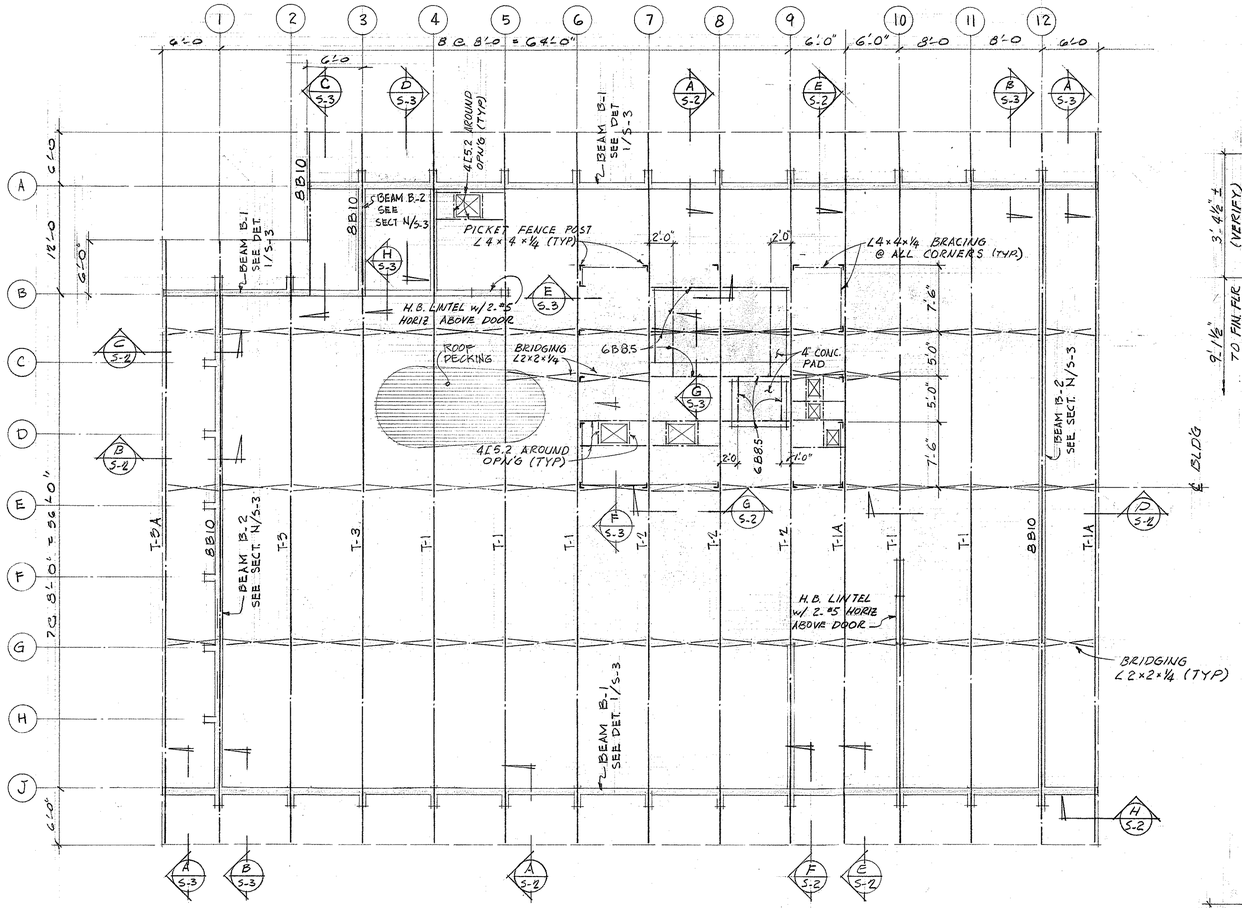

MAIN ROOF

ROOF FRAMING PLAN

SCALE: 1/8" = 1'-0"

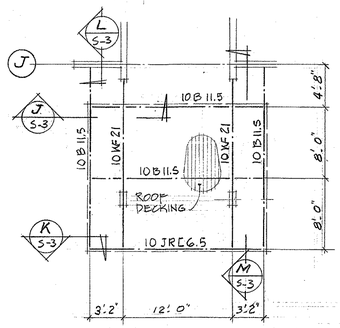

ENTRY ROOF

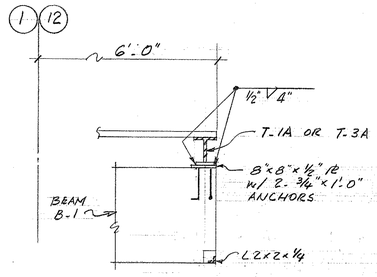

SECTION (H) S-2
SCALE: ½" = 1'-0"

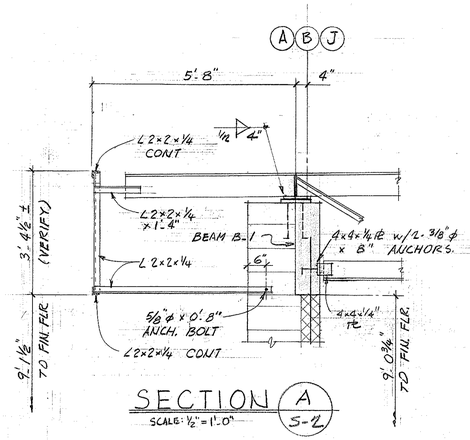

SECTION (A) S-2
SCALE: ½" = 1'-0"

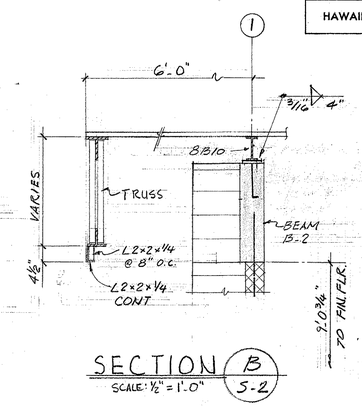

SECTION (B) S-2
SCALE: ½" = 1'-0"

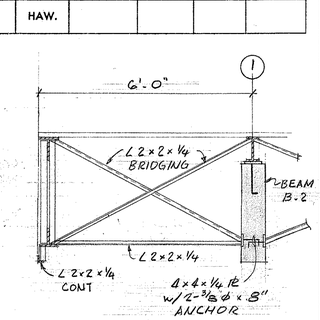

TYP @ BRIDGING LINE (1)

SECTION (C) S-2
SCALE: ½" = 1'-0"

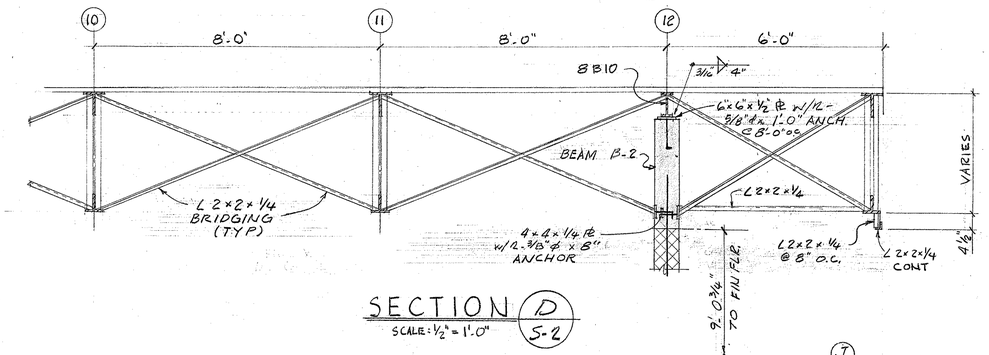

SECTION (D) S-2
SCALE: ½" = 1'-0"

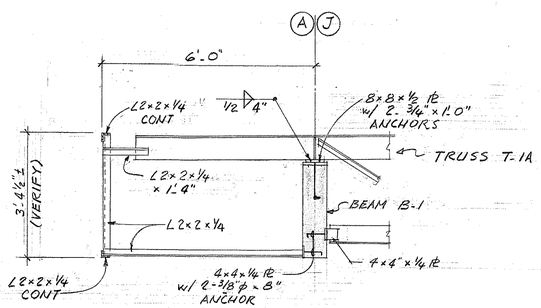

SECTION (E) S-2
SCALE: ½" = 1'-0"

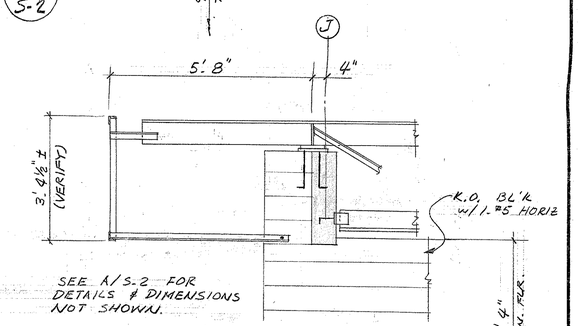

SECTION (F) S-2
SCALE: ½" = 1'-0"

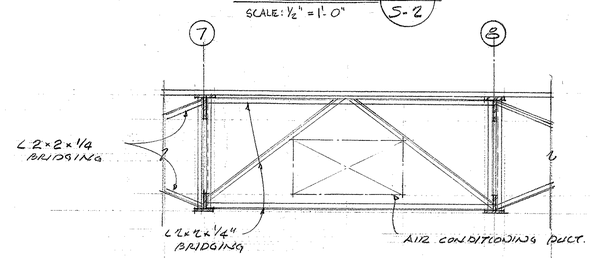

SECTION (G) S-2
1/16" = 1'-0"

NOTE
FULL WELD ALL CONNECTIONS TO DEVELOP FULL CAPACITY OF MEMBERS

ADMINISTRATION BUILDING

STATE OF HAWAII
DEPARTMENT OF TRANSPORTATION
HIGHWAYS DIVISION

OAHU DISTRICT BASEYARD FACILITIES
SHAFTER FLATS INDUSTRIAL DEVELOPMENT
AT MOANALUA, HONOLULU, OAHU, HAWAII

ROOF FRAMING PLAN & DETAILS

HAROLD TAKASHI MIYAMOTO
REGISTERED PROFESSIONAL ENGINEER
No. 1514
HAWAII, U.S.A.

THIS WORK WAS PREPARED BY ME OR UNDER MY SUPERVISION

HERBERT Y. MATSUMURA ARCHITECT A.I.A.
871 KAPIOLANI BLVD. HONOLULU, HAWAII

SHEET No. S-2 OF 42 SHEETS

ORIGINAL PLAN	SURVEY PLOTTED BY	DATE
	DRAWN BY	
	TRACED BY	
NOTE BOOK	DESIGNED BY	
No.	QUANTITIES BY	
	CHECKED BY	

PRINTED ON NO. 1000H CLEARPRINT

FED. ROAD DIST. NO.	STATE	FED. AID PROJ. NO.	FISCAL YEAR	SHEET NO.	TOTAL SHEETS
HAWAII	HAW.				

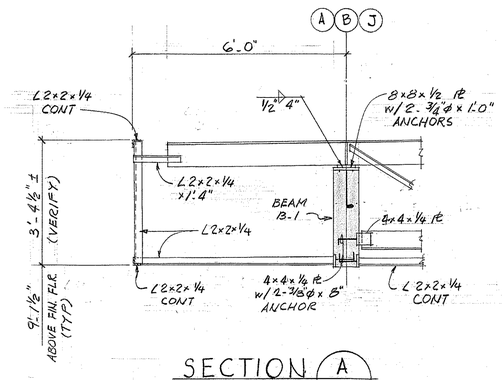

SECTION A / S-3
SCALE: 1/2"=1'-0"

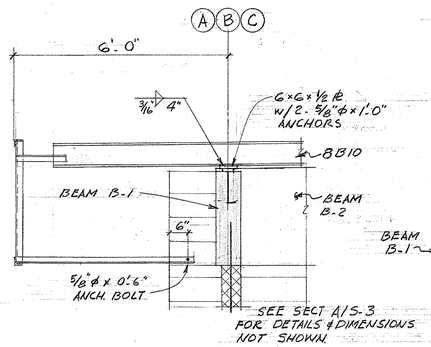

SECTION B / S-3
SCALE: 1/2"=1'-0"

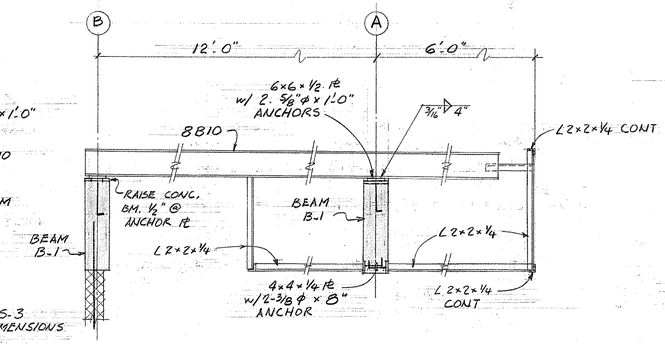

SECTION C / S-3
SCALE: 1/2"=1'-0"

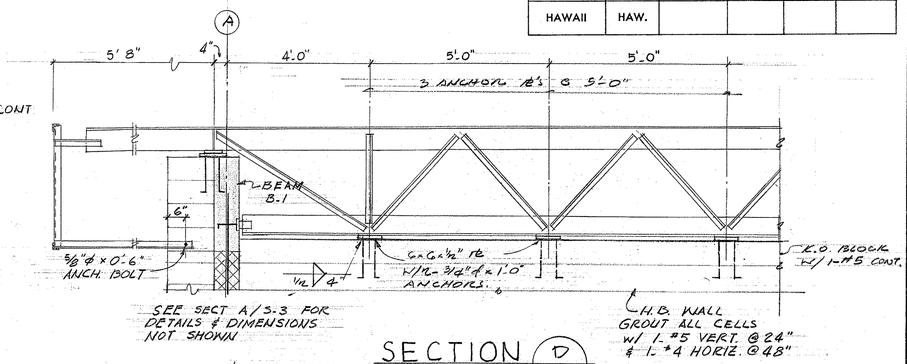

SECTION D / S-3
SCALE: 1/2"=1'-0"

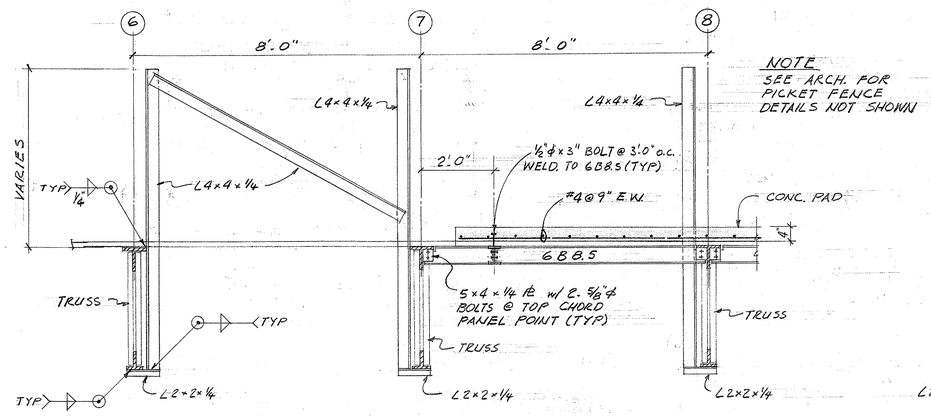

NOTE
SEE ARCH. FOR PICKET FENCE DETAILS NOT SHOWN

SECTION E / S-3
SCALE: 1/2"=1'-0"

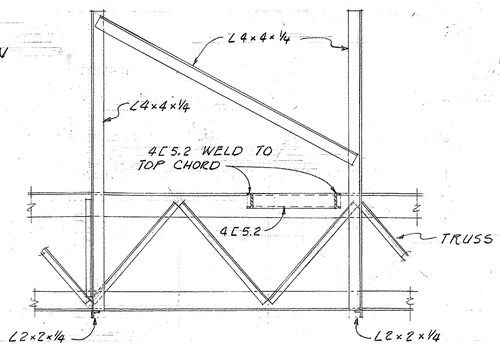

SECTION F / S-3
SCALE: 1/2"=1'-0"

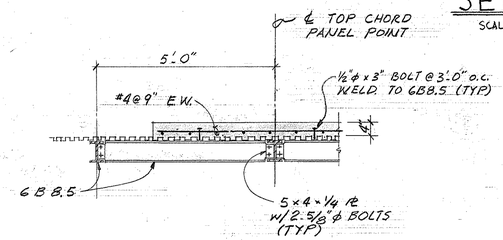

SECTION G / S-3
SCALE: 1/2"=1'-0"

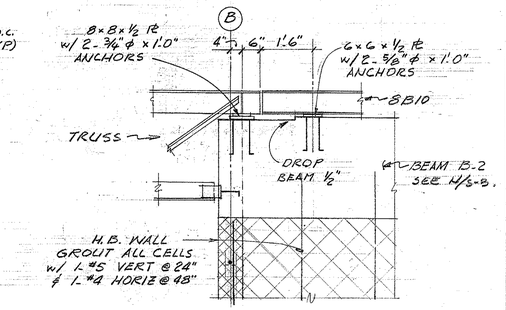

SECTION H / S-3
SCALE: 1/2"=1'-0"

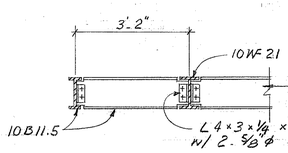

SECTION J / S-3
SCALE: 1/2"=1'-0"

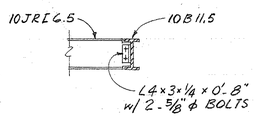

SECTION K / S-3
SCALE: 1/2"=1'-0"

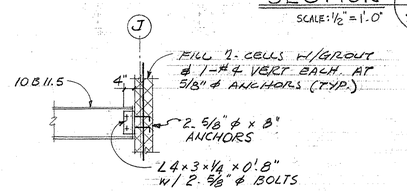

SECTION L / S-3
SCALE: 1/2"=1'-0"

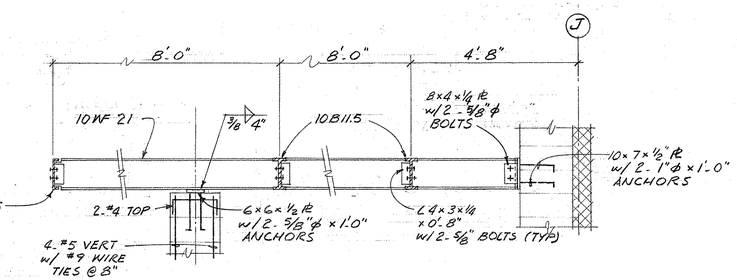

SECTION M / S-3
SCALE: 1/2"=1'-0"

NOTE
FULL WELD ALL CONNECTIONS TO DEVELOP FULL CAPACITY OF MEMBERS

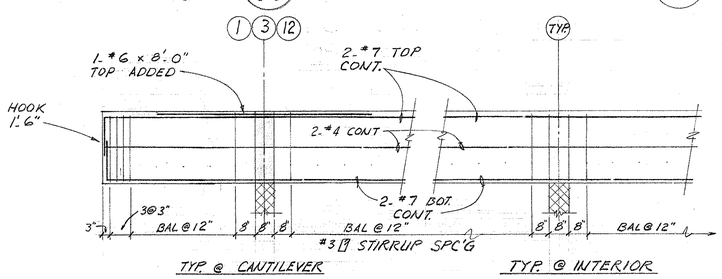

BEAM B-1 DETAIL / 1 / S-3

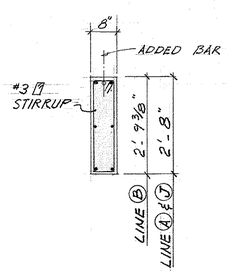

SECTION / S-3
SCALE: 1/2"=1'-0"

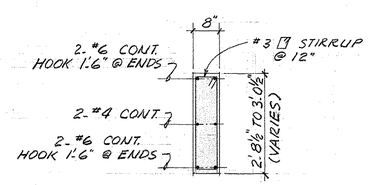

BEAM B-2

SECTION N / S-3
SCALE: 1/2"=1'-0"

ORIGINAL PLAN		DATE
	SURVEY PLOTTED BY	
	DRAWN BY	" " "
NOTE BOOK	TRACED BY	" " "
	DESIGNED BY	" " "
	QUANTITIES BY	" " "
No.	CHECKED BY	

ADMINISTRATION BUILDING

STATE OF HAWAII
DEPARTMENT OF TRANSPORTATION
HIGHWAYS DIVISION

OAHU DISTRICT BASEYARD FACILITIES
SHAFTER FLATS INDUSTRIAL DEVELOPMENT
AT MOANALUA, HONOLULU, OAHU, HAWAII

ENTRY ROOF & MAIN ROOF DETAILS

HAROLD TAKASHI MIYAMOTO
REGISTERED PROFESSIONAL ENGINEER
No. 1514
HAWAII, U.S.A.

THIS WORK WAS PREPARED BY ME OR UNDER MY SUPERVISION

Harold T. Miyamoto

HERBERT Y. MATSUMURA ARCHITECT A.I.A.
811 KAPIOLANI BLVD. HONOLULU, HAWAII

SHEET No. 6-3 OF 42 SHEETS

PRINTED ON NO. 1000H CLEARPRINT

FED. ROAD DIST. NO.	STATE	FED. AID PROJ. NO.	FISCAL YEAR	SHEET NO.	TOTAL SHEETS
HAWAII	HAW.				

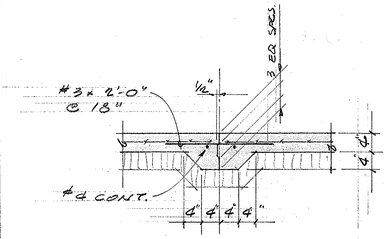

TYP. CONSTR. JOINT DETAIL (1 / S-4)

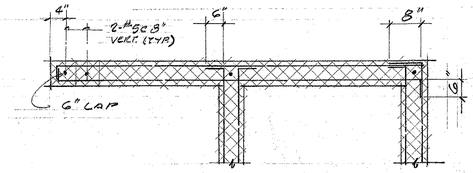

TYP. CMU WALL HOR. REINF. DETAIL (2 / S-4)

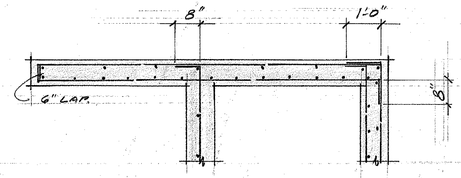

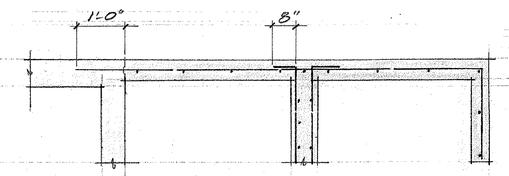

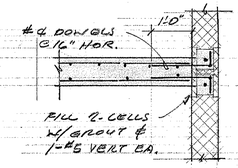

TYP. CONC. WALL HOR. REINF. DETAIL (3 / S-4)

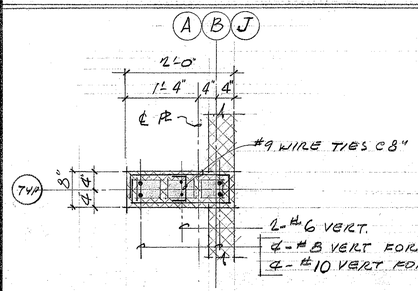

SECTION
3/4" = 1'-0

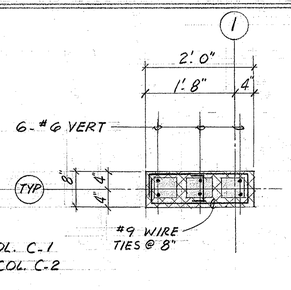

SECTION
3/4" = 1'-0

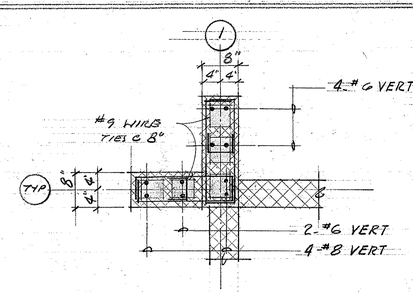

SECTION
3/4" = 1'-0

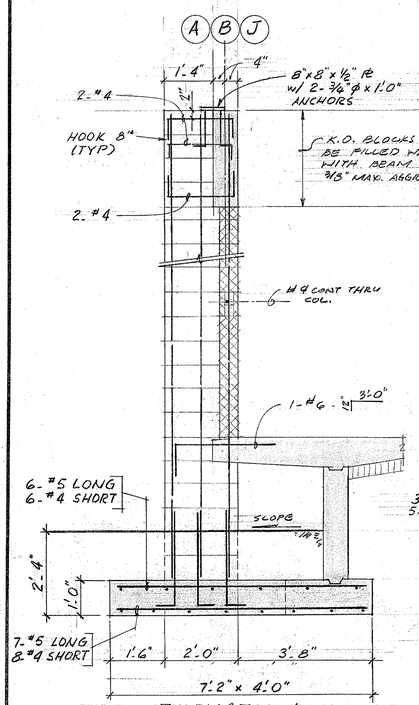

ELEVATION
1/2" = 1'-0

COL. C-1 & C-2 DET. (4 / S-4)

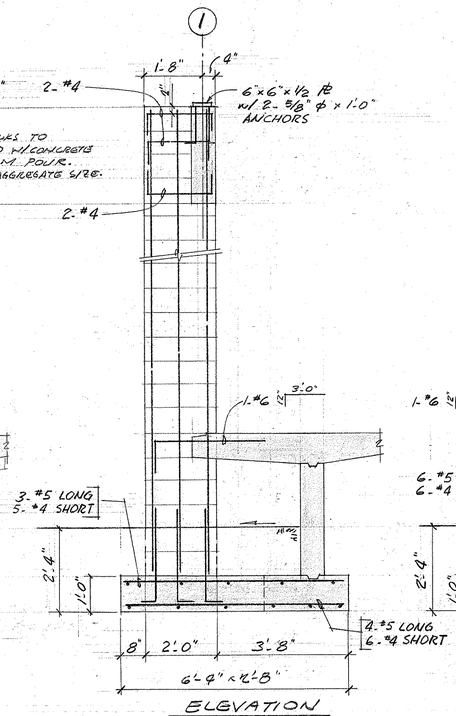

ELEVATION
1/2" = 1'-0

COL. C-3 DET. (5 / S-4)

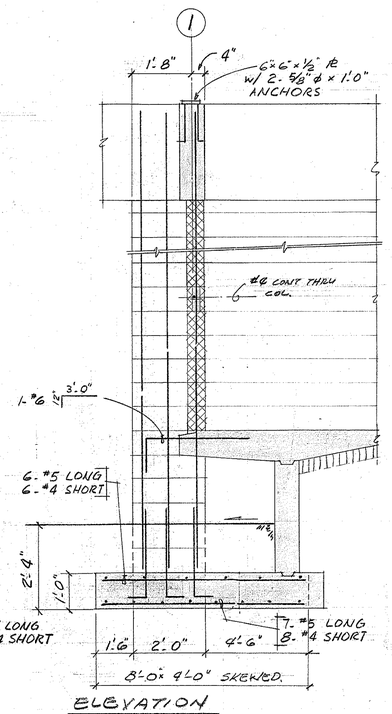

ELEVATION
1/2" = 1'-0

COL. C-4 DET. (6 / S-4)

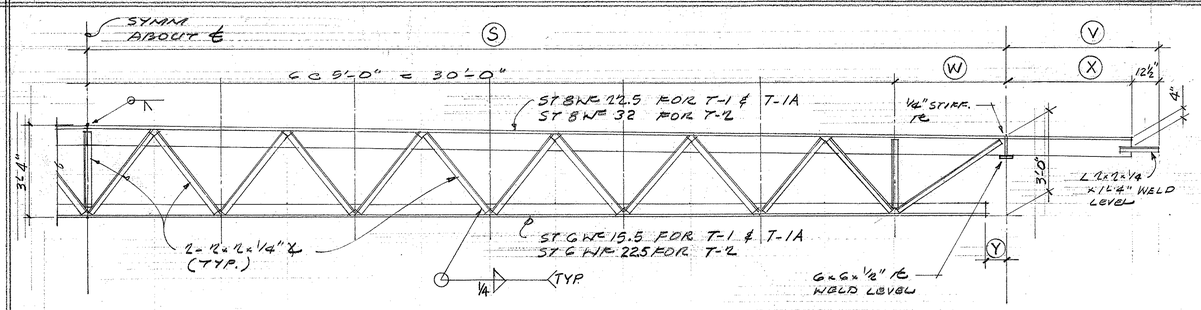

TYP. TRUSS T-1, T-1A & T-2
SCALE: 3/8" = 1'-0"

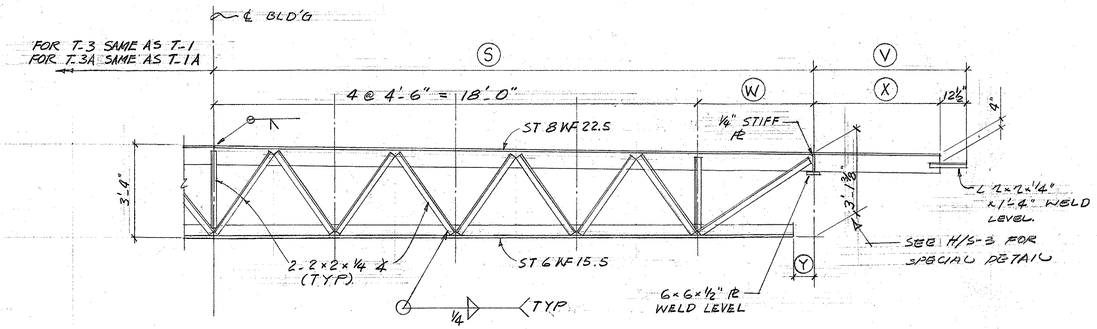

TYP. TRUSS T-3 & T-3A
SCALE: 3/8" = 1'-0"

	S	V	W	X	Y	CAMBER
T-1, T-2	34'-4"	5'-8"	4'-4"	4'-7 1/2"	0'-9"	2"
T-1A	34'-0"	6'-0"	4'-0"	4'-11 1/2"	0'-5"	2"
T-3	22'-4"	5'-8"	4'-4"	4'-7 1/2"	0'-9"	1 1/2"
T-3A	22'-0"	6'-0"	4'-0"	4'-11 1/2"	0'-5"	1 1/2"

ORIGINAL PLAN		DATE
	SURVEY PLOTTED BY	
	DRAWN BY	
	TRACED BY	
	DESIGNED BY	
NOTE BOOK	QUANTITIES BY	
	CHECKED BY	
No.		

HAROLD TAKASHI HIYAMOTO
REGISTERED PROFESSIONAL ENGINEER
No. 1514
HAWAII, U.S.A.

THIS WORK WAS PREPARED BY ME OR UNDER MY SUPERVISION

Harold T. Hiyamoto

ADMINISTRATION BUILDING

STATE OF HAWAII
DEPARTMENT OF TRANSPORTATION
HIGHWAYS DIVISION

OAHU DISTRICT BASEYARD FACILITIES
SHAFTER FLATS INDUSTRIAL DEVELOPMENT
AT MOANALUA, HONOLULU, OAHU, HAWAII

FOOTING & COLUMN DETAILS
MAIN ROOF TRUSS DETAILS

HERBERT T. MATSUMURA ARCHITECT A.I.A.
871 KAPIOLANI BLVD. HONOLULU, HAWAII

SHEET No. S-4 OF 42 SHEETS

PRINTED ON NO. 1000H CLEARPRINT

FED. ROAD DIST. NO.	STATE	FED. AID PROJ. NO.	FISCAL YEAR	SHEET NO.	TOTAL SHEETS
HAWAII	HAW.				

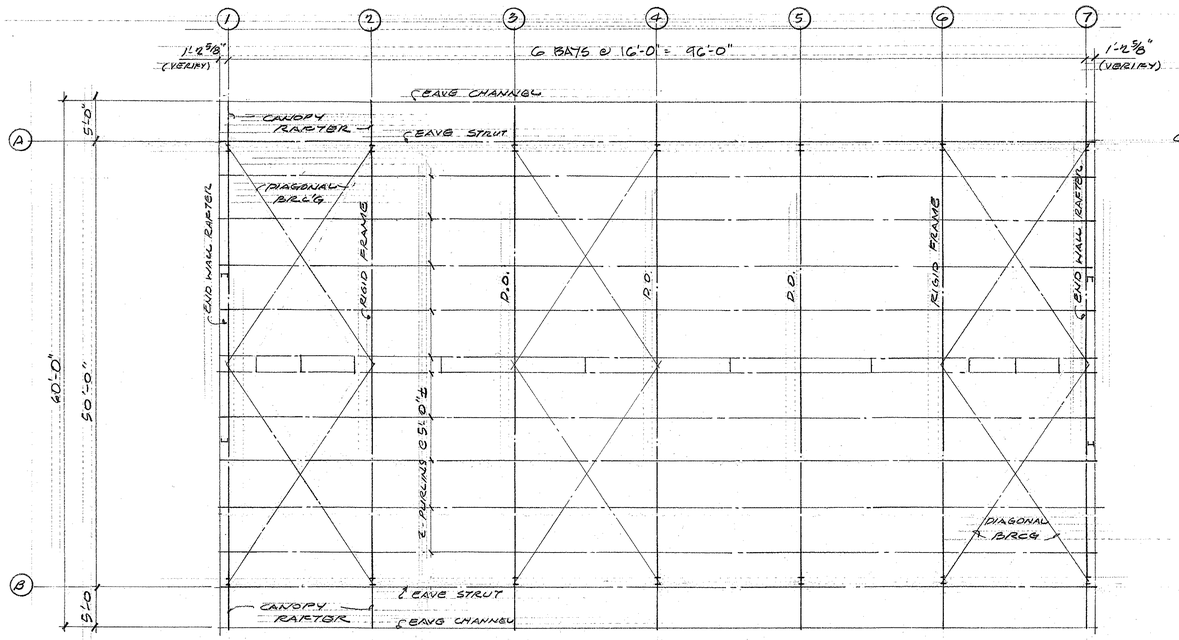

ROOF FRAMING PLAN
SCALE: 1/8" = 1'-0

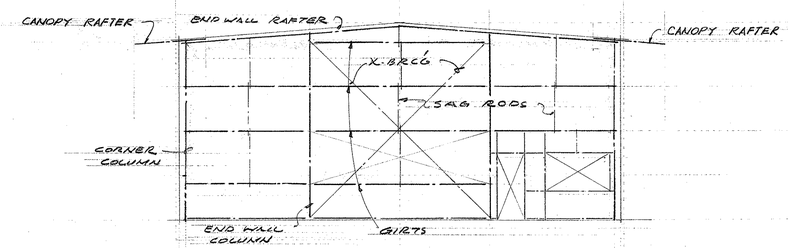

TYP. END WALL FRAMING
SCALE: 1/8" = 1'-0"

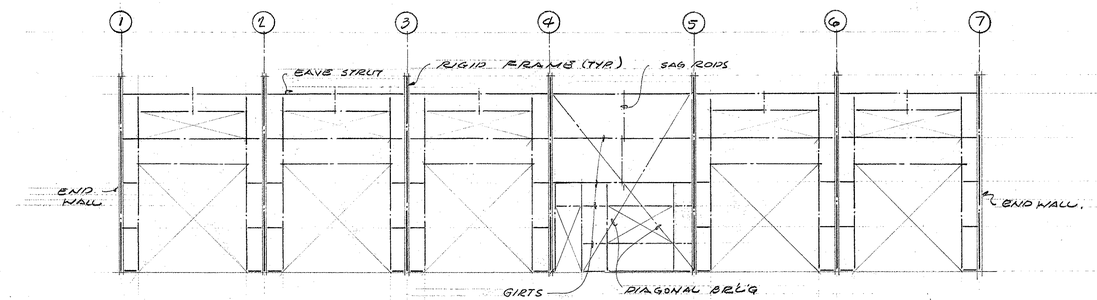

EAST WALL FRAMING
SCALE: 1/8" = 1'-0"

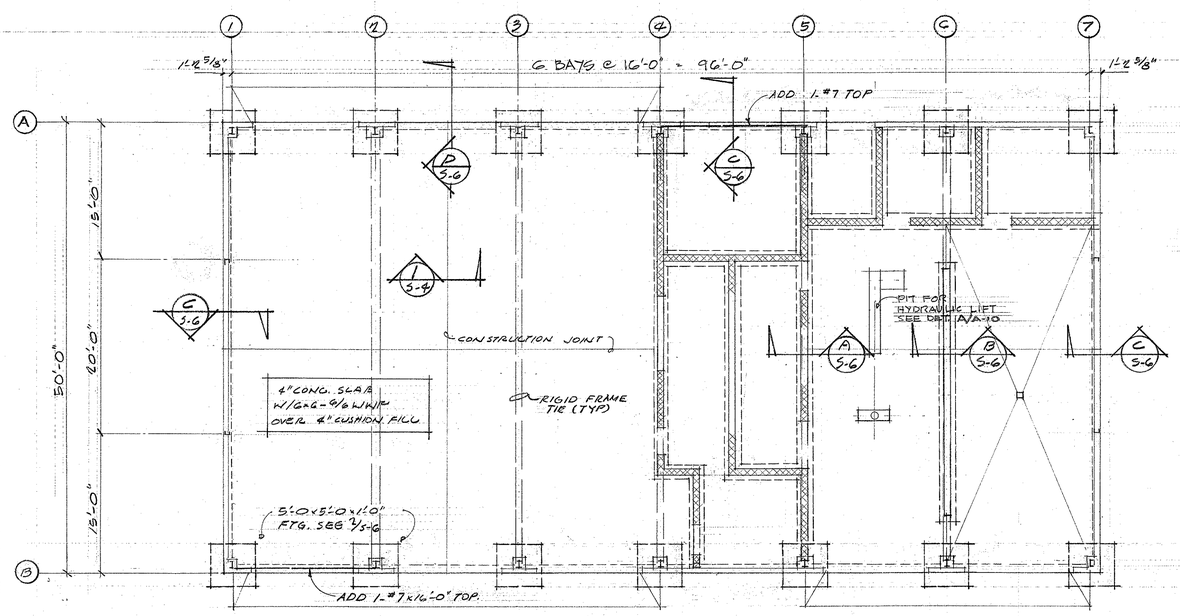

FOUNDATION PLAN
SCALE: 1/8" = 1'-0

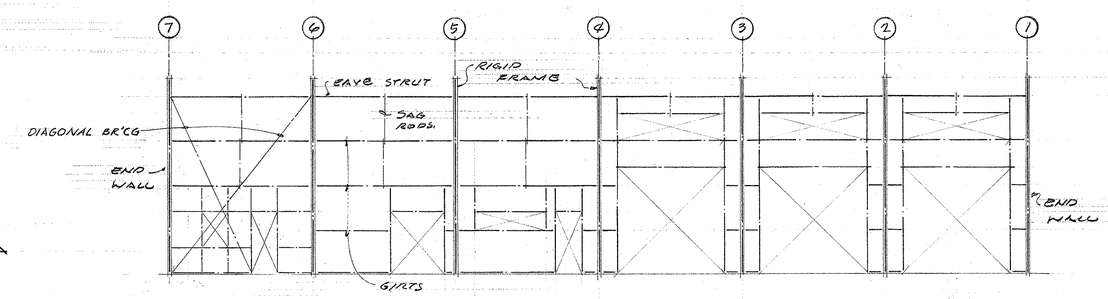

WEST WALL FRAMING
SCALE: 1/8" = 1'-0"

MOTOR POOL

STATE OF HAWAII
DEPARTMENT OF TRANSPORTATION
HIGHWAYS DIVISION

OAHU DISTRICT BASEYARD FACILITIES
SHAFTER FLATS INDUSTRIAL DEVELOPMENT
AT MOANALUA, HONOLULU, OAHU, HAWAII

FOUNDATION PLAN
FRAMING DETAILS

HAROLD TAKASHI MIYAMOTO
REGISTERED PROFESSIONAL ENGINEER
No. 1514
HAWAII, U.S.A.

THIS WORK WAS PREPARED BY ME OR UNDER MY SUPERVISION

HERBERT Y. MATSUMURA ARCHITECT A.I.A.
871 KAPIOLANI BLVD. HONOLULU, HAWAII

SHEET No. S-5 OF 42 SHEETS

ORIGINAL PLAN	SURVEY PLOTTED BY	DATE
	DRAWN BY	"
	TRACED BY	"
NOTE BOOK	DESIGNED BY	"
	QUANTITIES BY	"
No.	CHECKED BY	"

PRINTED ON NO. 1000H CLEARPRINT

FED. ROAD DIST. NO.	STATE	FED. AID PROJ. NO.	FISCAL YEAR	SHEET NO.	TOTAL SHEETS
HAWAII	HAW.				

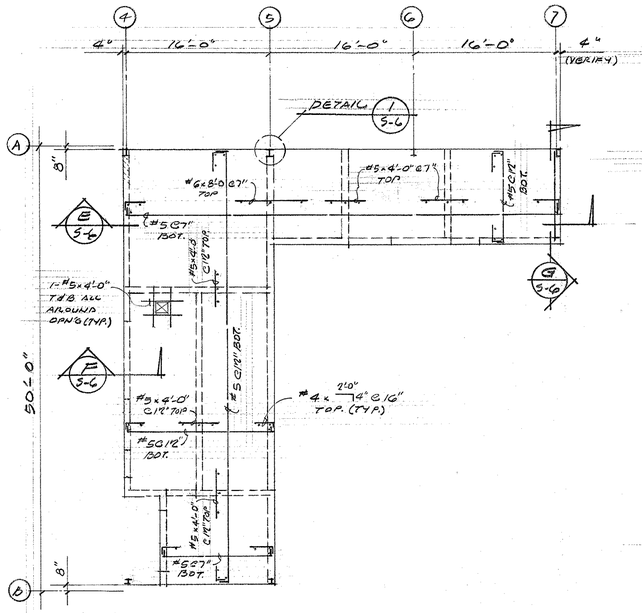

CEIL'G FRAMING PLAN

1/8" = 1'-0

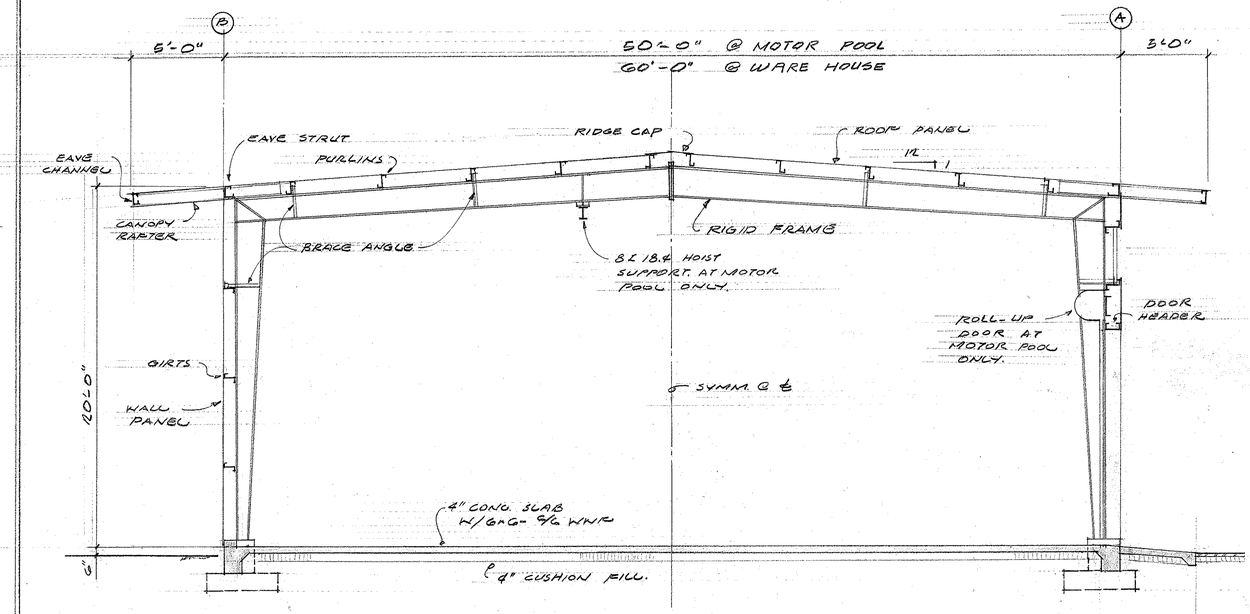

TYP. RIGID FRAME SECTION

1/4" = 1'-0

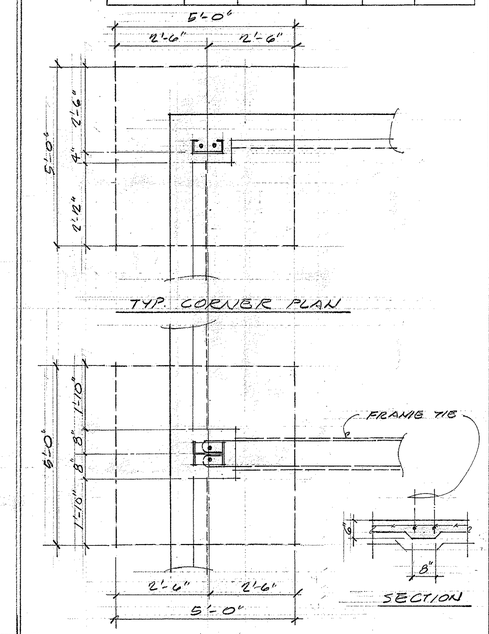

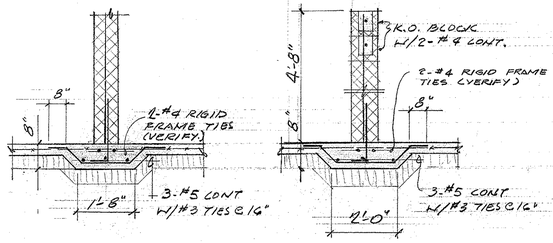

SECTION A 5-6

1/2" = 1'-0

SECTION B 5-6

1/2" = 1'-0

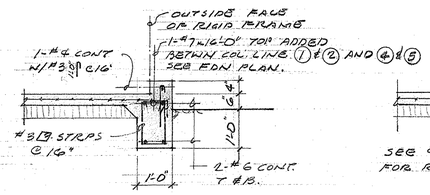

SECTION C 5-6

1/2" = 1'-0

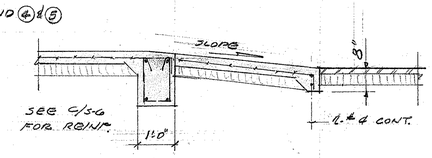

SECTION D 5-6

1/2" = 1'-0

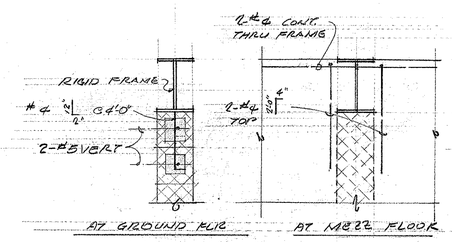

DETAIL 1 5-6

3/4" = 1'-0

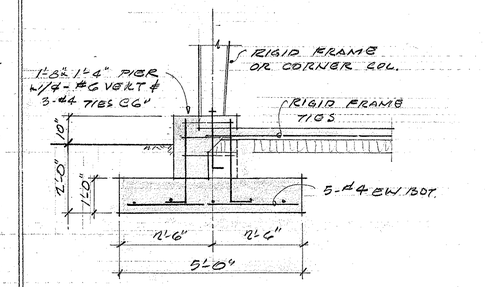

TYP. SECTION

TYP. FOOTING DETAIL 2 5-6

1/2" = 1'-0

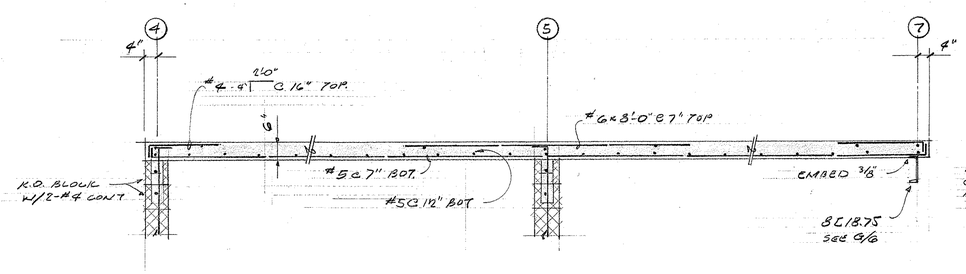

SECTION E 5-6

1/2" = 1'-0

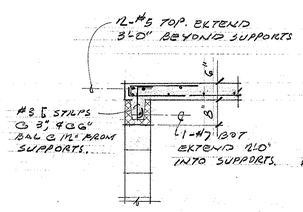

SECTION F 5-6

1/2" = 1'-0

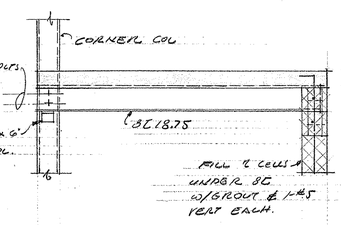

SECTION G 5-6

1/2" = 1'-0

ORIGINAL PLAN	SURVEY PLOTTED BY	DATE
	DRAWN BY	"
	TRACED BY	"
	DESIGNED BY	"
NOTE BOOK	QUANTITIES BY	"
No.	CHECKED BY	"

MOTOR POOL

STATE OF HAWAII
DEPARTMENT OF TRANSPORTATION
HIGHWAYS DIVISION

OAHU DISTRICT BASEYARD FACILITIES
SHAFTER FLATS INDUSTRIAL DEVELOPMENT
AT MOANALUA, HONOLULU, OAHU, HAWAII

CEIL'G. FRAMING PLAN & DETAILS
TYP. RIGID FRAME

HAROLD TAKASHI MIYAMOTO
REGISTERED PROFESSIONAL ENGINEER
No. 1514
HAWAII, U.S.A.

THIS WORK WAS PREPARED BY ME OR UNDER MY SUPERVISION

HERBERT Y. MATSUMURA ARCHITECT A.I.A.
871 KAPIOLANI BLVD. HONOLULU, HAWAII

SHEET No. 5-6 OF 42 SHEETS

PRINTED ON NO. 10004 CLEARPRINT

FED. ROAD DIST. NO.	STATE	FED. AID PROJ. NO.	FISCAL YEAR	SHEET NO.	TOTAL SHEETS
HAWAII	HAW.				

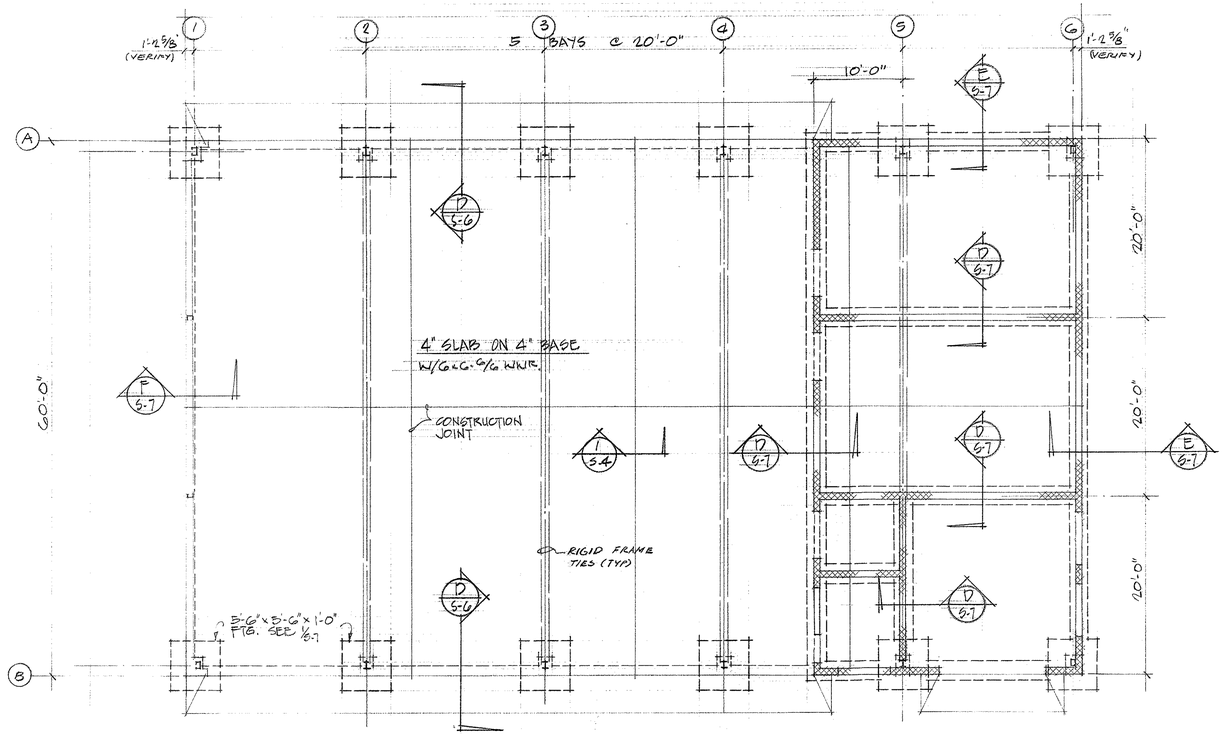

FOUNDATION PLAN

SCALE: 1/8" = 1'-0"

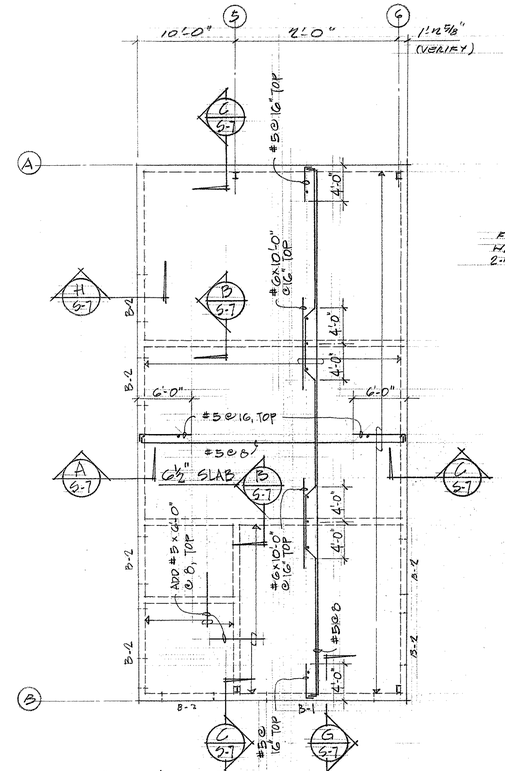

CEIL'G FRAMING PLAN

SCALE: 1/8" = 1'-0"

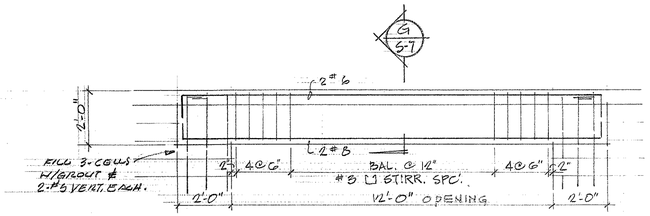

BEAM B-1 ELEV.

SCALE: 3/8" = 1'-0"

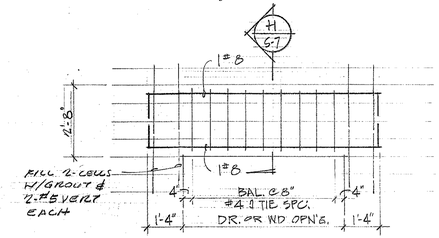

BEAM B-2 ELEV.

SCALE: 3/8" = 1'-0"

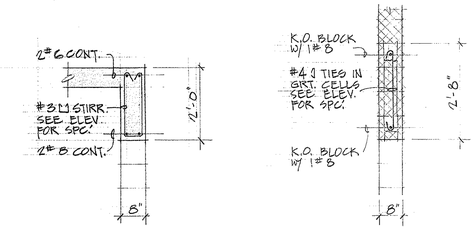

SECT. G S-7 — SCL: 1/2" = 1'-0"

SECT. H S-7 — SCL: 1/2" = 1'-0"

BEAM DETAILS

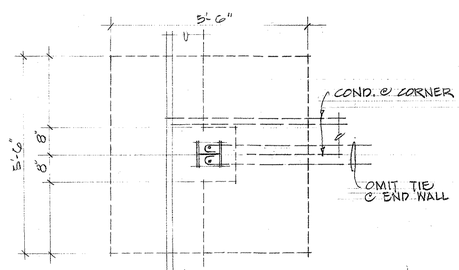

PLAN

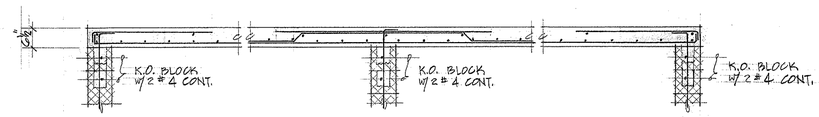

SECT. A S-7 — SCL: 1/2" = 1'-0"

SECT. B S-7 — SCL: 1/2" = 1'-0"

SECT. C S-7 — SCL: 1/2" = 1'-0

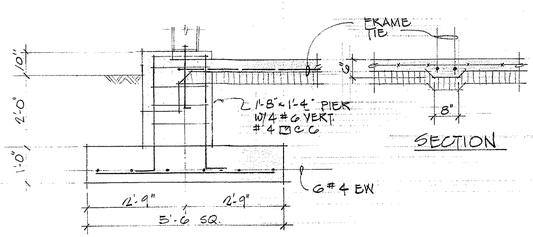

TYP. FOOTING DETAIL 1 S-7

SCALE: 1/2" = 1'-0"

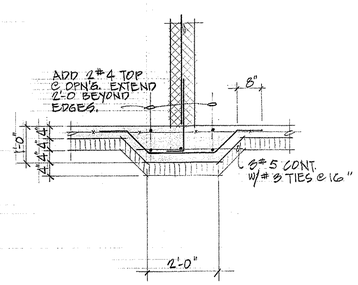

SECT. D S-7 — SCL: 1/2" = 1'-0"

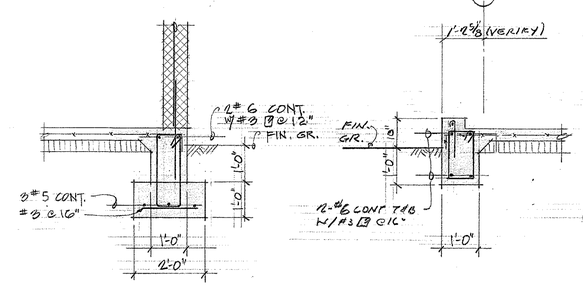

SECT. E S-7 — SCL: 1/2" = 1'-0"

SECT. F S-7 — SCL: 1/2" = 1'-0"

THIS WORK WAS PREPARED BY ME OR UNDER MY SUPERVISION

HAROLD TAKASHI MIYAMOTO — REGISTERED PROFESSIONAL ENGINEER No. 1514 — HAWAII, U.S.A.

WAREHOUSE

STATE OF HAWAII
DEPARTMENT OF TRANSPORTATION
HIGHWAYS DIVISION

OAHU DISTRICT BASEYARD FACILITIES
SHAFTER FLATS INDUSTRIAL DEVELOPMENT
AT MOANALUA, HONOLULU, OAHU, HAWAII

FOUNDATION PLAN & DETAILS
CEIL'G. FRAMING PLAN & DETAILS

HERBERT Y. MATSUMURA — ARCHITECT A.I.A.
871 KAPIOLANI BLVD. — HONOLULU, HAWAII

SHEET No. S-7 OF 42 SHEETS

ORIGINAL PLAN	SURVEY PLOTTED BY	DATE
	DRAWN BY	"
	TRACED BY	"
	DESIGNED BY	"
NOTE BOOK	QUANTITIES BY	"
No.	CHECKED BY	"

PRINTED ON NO. 1000H CLEARPRINT

FED. ROAD DIST. NO.	STATE	FED. AID PROJ. NO.	FISCAL YEAR	SHEET NO.	TOTAL SHEETS
HAWAII	HAW.				

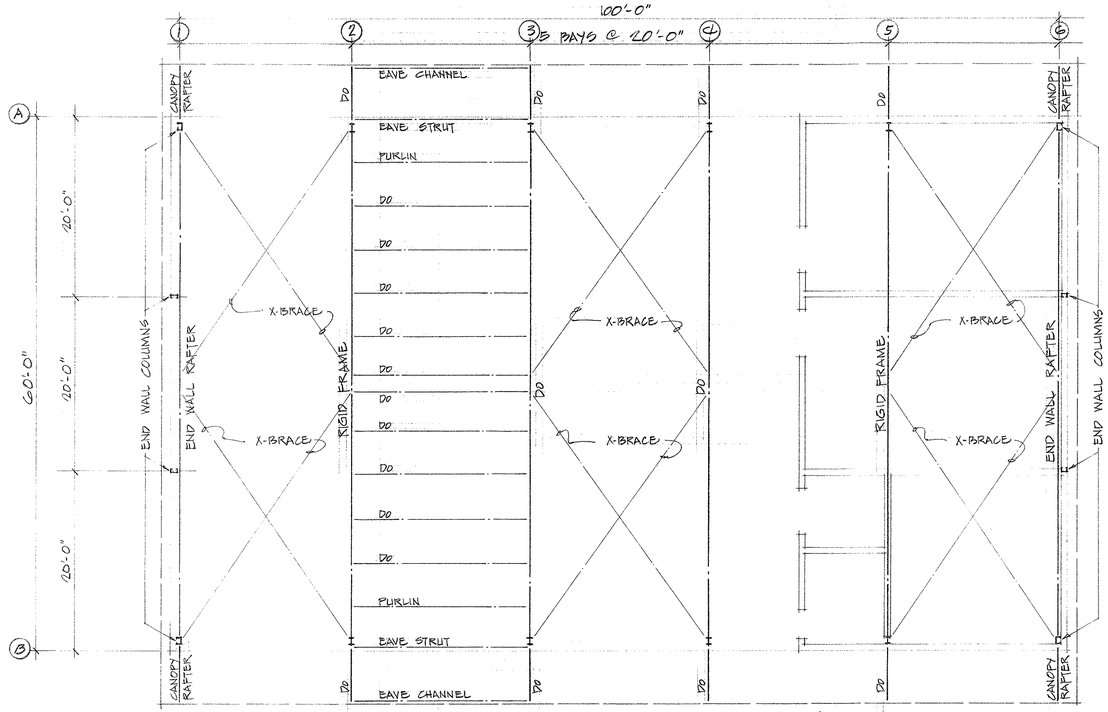

ROOF FRAMING PLAN

SCALE : 1/8" = 1'-0"

NOTE: RIGID FRAME SIMILAR TO SHOP BLDG. FRAME.

GENERAL NOTES:

I. REINFORCED CONCRETE
A. MINIMUM CONCRETE STRENGTH - 3000 PSI @ 28 DAYS.
B. REINFORCEMENT
1. UNLESS SHOWN OTHERWISE, ALL REINFORCING BARS SHALL BE DEFORMED INTERMEDIATE GRADE BARS CONFORMING TO ASTM A15 AND ASTM A305.
2. WELDED WIRE FABRIC SHALL CONFORM TO ASTM A185-61T.
3. LAPPED SPLICES SHALL BE 30 DIAMETERS BUT NOT LESS THAN 12".

II. STRUCTURAL FILL
A. FILL UNDER GROUND FLOOR SLAB.
1. FILL MATERIAL SHALL CONSIST OF QUARRY WASTE OR APPROVED EQUAL.
2. FILL SHALL BE PLACED IN 6 INCH MAXIMUM LOOSE LAYERS AND MECHANICALLY COMPACTED AT OPTIMUM MOISTURE CONTENT TO 90% OF MODIFIED AASHO T-180.
3. ALL FILL SHALL BE PLACED AND COMPACTED OVER AN AREA 5'-0" BEYOND THE BUILDING LINES BEFORE EXCAVATION FOR FOOTINGS AND TO FINAL GRADES.

III. CONCRETE MASONRY UNITS
A. UNLESS OTHERWISE SHOWN ON PLANS, CONCRETE MASONRY UNITS SHALL BE TWO CELL TYPE CONFORMING TO ASTM C90 AND HAVE MINIMUM REINFORCEMENT AS FOLLOWS:
1. 6" BLOCKS - #4 VERTICAL @ 32" O.C. / #4 HORIZONTAL @ 48" O.C. } STANDARD DUR-O-WAL OR EQUAL @ 16" O.C.
2. 8" BLOCKS - #5 VERTICAL @ 32" O.C. } STANDARD DUR-O-WAL OR EQUAL @ 16" O.C.
B. IN ADDITION TO THE REINFORCING SCHEDULE ABOVE, ADDITIONAL VERTICAL REINFORCING SHALL BE PROVIDED AT ALL INTERSECTIONS, JAMBS, MULLIONS, CORNERS AND DISCONTINUOUS ENDS.
C. UNLESS OTHERWISE SHOWN ALL OPENINGS IN CONCRETE MASONRY UNITS WALLS SHALL BE FRAMED WITH 2 #5 BARS ALL AROUND, EXTENDING 24" BEYOND THE OPENINGS.
D. ALL CELLS CONTAINING REINFORCING BARS SHALL BE FILLED WITH 2500 PSI GROUT IN LIFTS NOT EXCEEDING 8 FEET. ALL CELLS SHALL BE THOROUGHLY RODDED TO PREVENT HONEYCOMBING.
E. LAPPED SPLICES SHALL BE 30 DIAMETERS BUT NOT LESS THAN 12".

IV. STRUCTURAL STEEL
A. RIGID FRAME AND VEHICLE SHED STEEL STRUCTURES SHALL MEET THE LATEST REQUIREMENTS OF THE UBC, AISC, AISI, AND AWS.
B. CONTRACTOR SHALL SUBMIT SIX (6) COPIES OF DESIGN CALCULATIONS AND SHOP DRAWINGS, STAMPED AND SIGNED BY A REGISTERED STRUCTURAL ENGINEER, FOR APPROVAL BY THE ENGINEER BEFORE FABRICATION OR CONSTRUCTION.
C. ALL STEEL MEMBERS SPECIFICALLY NOTED IN THE PLANS SHALL CONFORM TO ASTM A36.
D. ALL BOLTS SPECIFICALLY NOTED IN THE PLANS SHALL CONFORM TO ASTM A307 AND GALVANIZED.

V. CONSTRUCTION NOTES
A. SLABS ON GRADE SHALL BE POURED IN APPROXIMATELY SQUARE AREAS NOT EXCEEDING 800 SQ. FT. WITH A MAXIMUM OF 30 FT. ON ANY ONE SIDE. THE SLABS SHALL BE POURED IN A CHECKER BOARD FASHION WITH PROPER CONSTRUCTION JOINTS.
B. ALL COLUMN AND WALL FOOTINGS SHALL BEAR ON FIRM COMPACTED SOIL SUBJECT TO THE APPROVAL OF THE ENGINEER, A MIN. OF 2'-0" BELOW FINAL GRADE. ALL SOFT SPOTS OR POCKETS ENCOUNTERED IN FOOTING EXCAVATIONS OR BELOW THE BUILDING AREA SHALL BE DUG OUT AND BACKFILLED AND COMPACTED AS SPECIFIED IN SECTION II ABOVE.
C. SHORING FOR CONCRETE FLOOR SYSTEM SHALL REMAIN IN PLACE FOR 14 DAYS OR UNTIL THE CONCRETE HAS ATTAINED A COMPRESSIVE STRENGTH OF 2500 PSI, WHICHEVER OCCURS LATER.
D. THE CONTRACTOR SHALL NOTIFY THE ENGINEER OF THE STARTING TIME OF EACH CONCRETE POUR AT LEAST 24 HOURS IN ADVANCE.

VI. DESIGN NOTES
A. ROOF LOADS:

TRIBUTARY AREA	LOAD
0 - 200 ☐	20 PSF
201 - 600 ☐	16 PSF
600 >	12 PSF

B. HOIST LOAD 4000 LBS
C. WIND LOAD 15 PSF
D. EARTHQUAKE ZONE I
E. FOUNDATION 1500 PSF

VII. LEVELING GROUT SHALL BE NON-SHRINK GROUT, EMBECO OR APPROVED EQUAL.

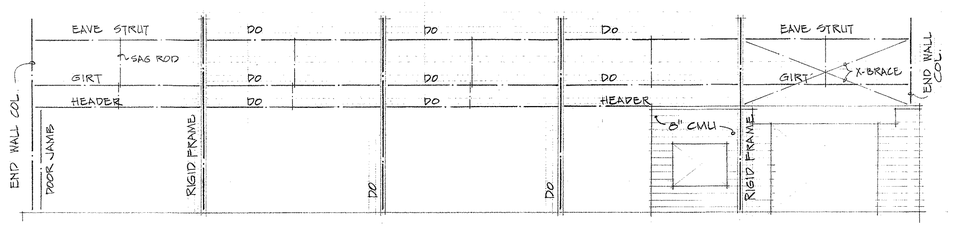

EAST WALL FRAMING

SCALE : 1/8" = 1'-0"

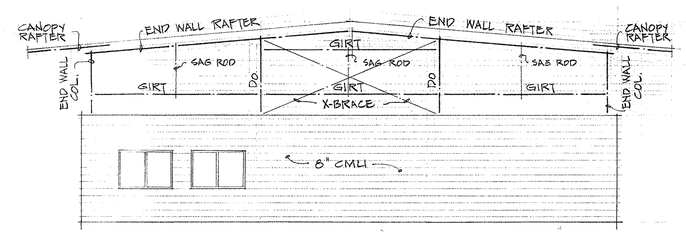

NORTH END WALL FRAMING

SCALE : 1/8" = 1'-0"

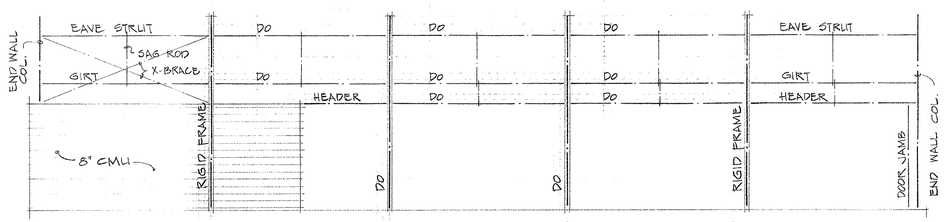

WEST WALL FRAMING

SCALE : 1/8" = 1'-0"

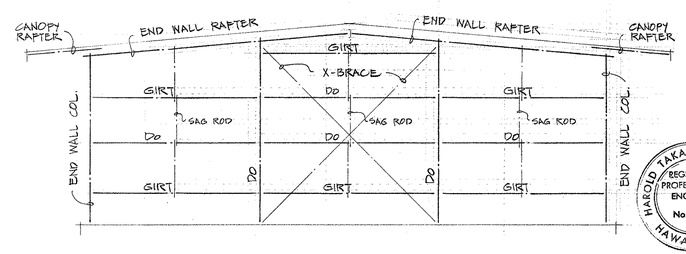

SOUTH END WALL FRAMING

SCALE : 1/8" = 1'-0"

HAROLD AKASHI MIYAMOTO
REGISTERED PROFESSIONAL ENGINEER
No. 1514
HAWAII, U.S.A.

THIS WORK WAS PREPARED BY ME OR UNDER MY SUPERVISION

WAREHOUSE

STATE OF HAWAII
DEPARTMENT OF TRANSPORTATION
HIGHWAYS DIVISION

OAHU DISTRICT BASEYARD FACILITIES
SHAFTER FLATS INDUSTRIAL DEVELOPMENT
AT MOANALUA, HONOLULU, OAHU, HAWAII

FRAMING DETAILS
GENERAL NOTES

HERBERT Y. MATSUMURA ARCHITECT A.I.A.
871 KAPIOLANI BLVD. HONOLULU, HAWAII

SHEET No. S-8 OF 42 SHEETS

ORIGINAL PLAN		DATE
	SURVEY PLOTTED BY	
	DRAWN BY	"
	TRACED BY	"
NOTE BOOK	DESIGNED BY	"
	QUANTITIES BY	"
No.	CHECKED BY	"

PRINTED ON NO. 1000H CLEARPRINT

FED. ROAD DIST. NO.	STATE	FED. AID PROJ. NO.	FISCAL YEAR	SHEET NO.	TOTAL SHEETS
HAWAII	HAW.				

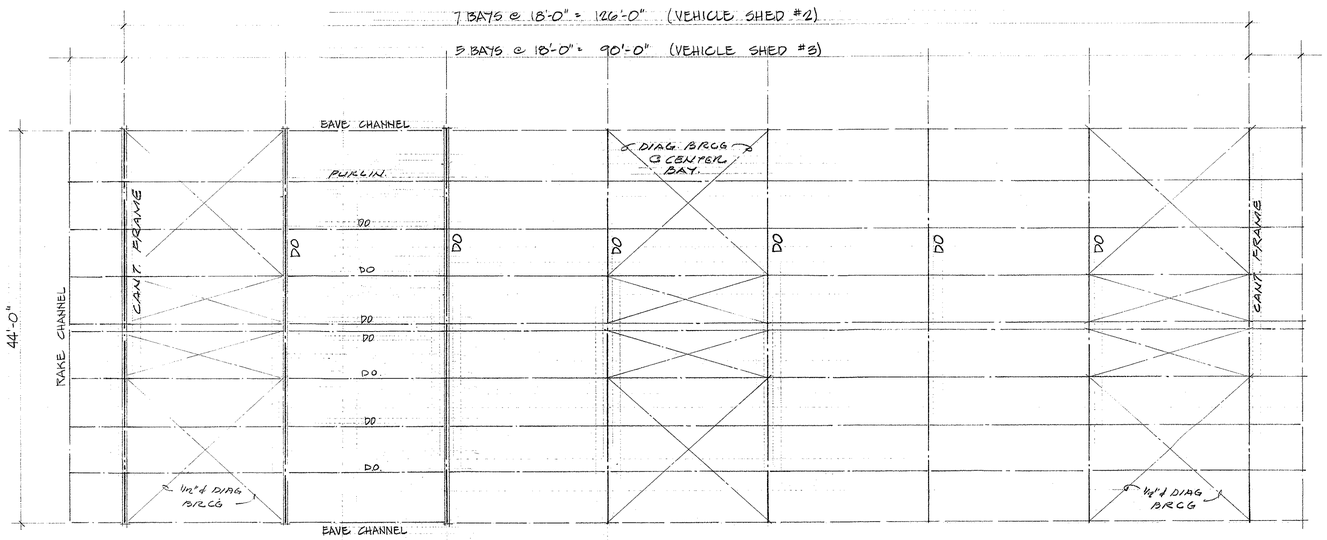

ROOF FRAMING PLAN · VEHICLE SHED #2 & #3

SCALE : 1/8" = 1'-0"

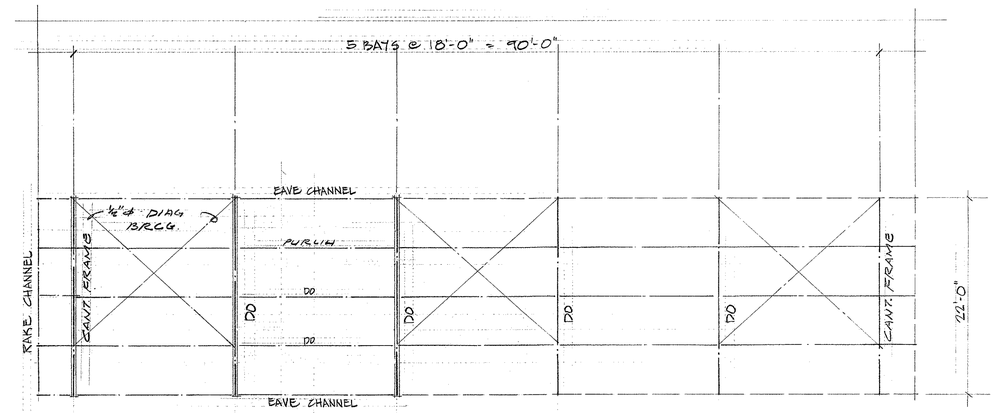

ROOF FRAMING PLAN · VEHICLE SHED #1

SCALE : 1/8" = 1'-0"

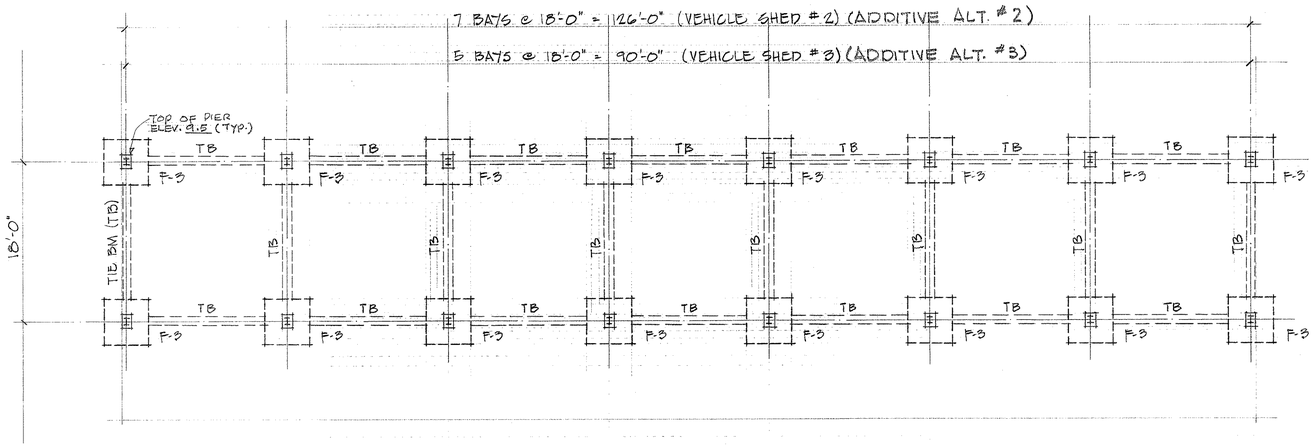

FOUNDATION PLAN · VEHICLE SHED #2 & #3

SCALE : 1/8" = 1'-0"

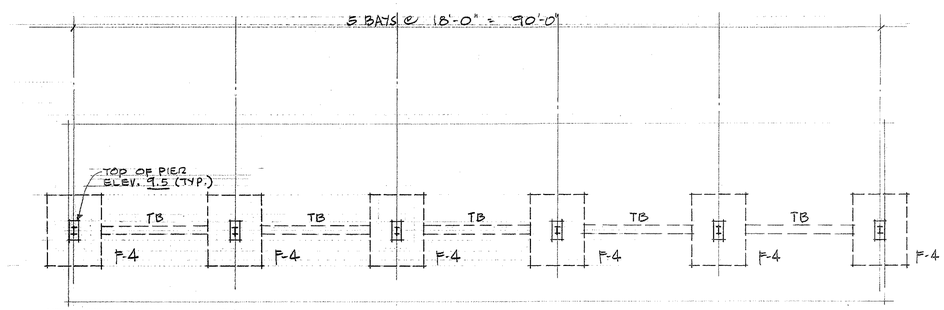

FOUNDATION PLAN · VEHICLE SHED #1

SCALE : 1/8" = 1'-0" (ADDITIVE ALT. #1)

VEHICLE SHED

STATE OF HAWAII
DEPARTMENT OF TRANSPORTATION
HIGHWAYS DIVISION

OAHU DISTRICT BASEYARD FACILITIES
SHAFTER FLATS INDUSTRIAL DEVELOPMENT
AT MOANALUA, HONOLULU, OAHU, HAWAII

FOUNDATION & ROOF FRAMING PLANS

HERBERT Y. MATSUMURA ARCHITECT A.I.A.
871 KAPIOLANI BLVD. HONOLULU, HAWAII

HAROLD TAKASHI MIYAMOTO
REGISTERED PROFESSIONAL ENGINEER
No. 1514
HAWAII, U.S.A.

THIS WORK WAS PREPARED BY ME OR UNDER MY SUPERVISION

Harold T. Miyamoto

SHEET No. 5-9 OF 42 SHEETS

ORIGINAL PLAN		DATE
	SURVEY PLOTTED BY	
	DRAWN BY	
	TRACED BY	
	DESIGNED BY	
NOTE BOOK	QUANTITIES BY	
No.	CHECKED BY	

PRINTED ON NO. 1000H CLEARPRINT

FED. ROAD DIST. NO.	STATE	FED. AID PROJ. NO.	FISCAL YEAR	SHEET NO.	TOTAL SHEETS
HAWAII	HAW.				

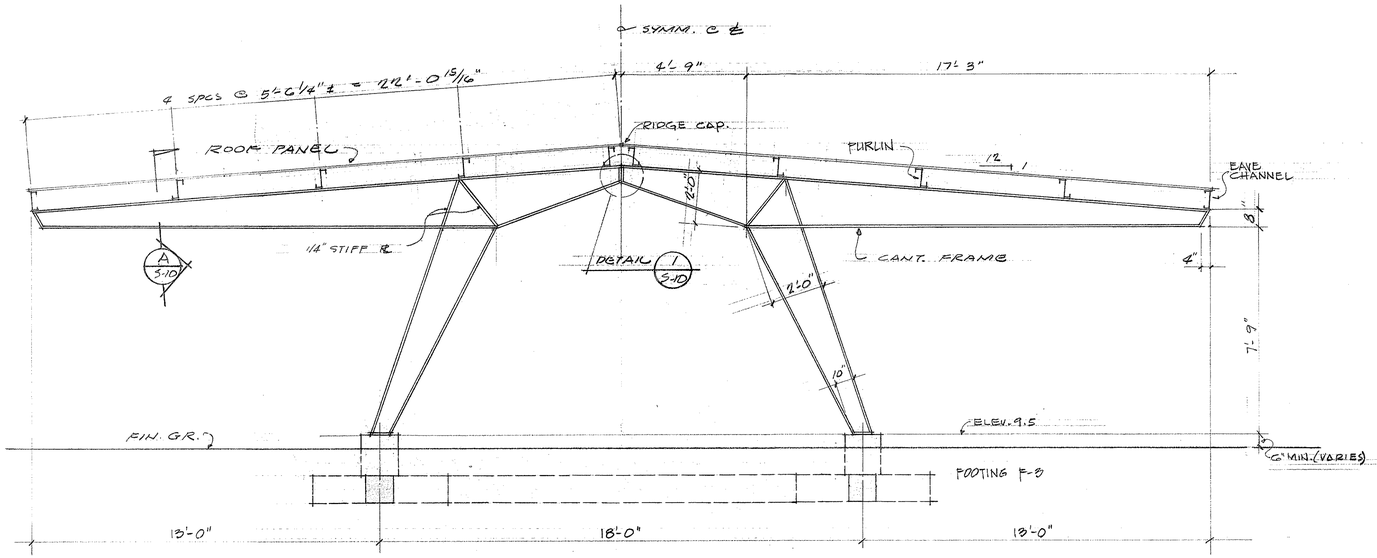

TYP. FRAME · VEHICLE SHED #2 & #3

SCALE : 3/8" = 1'-0"

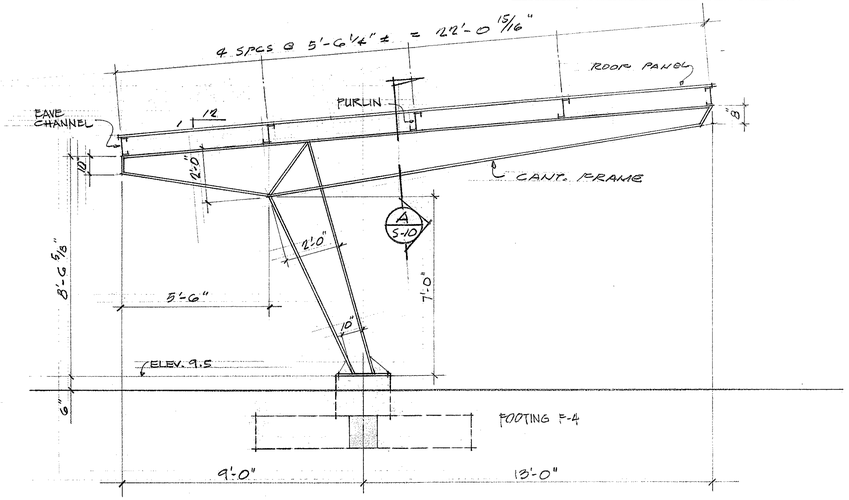

TYP. FRAME · VEHICLE SHED #1

SCALE : 3/8" = 1'-0"

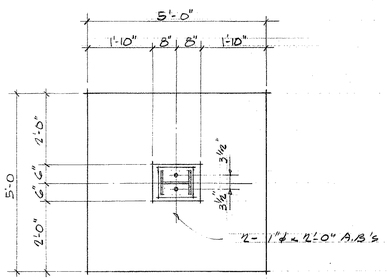

PLAN

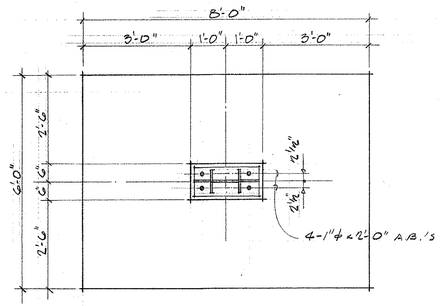

PLAN

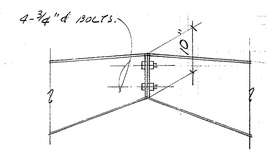

DETAIL 1 S-10

3/4" = 1'-0

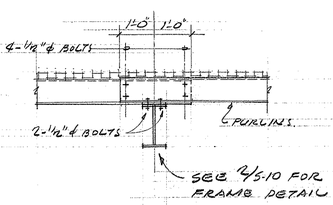

SECTION A S-10

1 1/2" = 1'-0

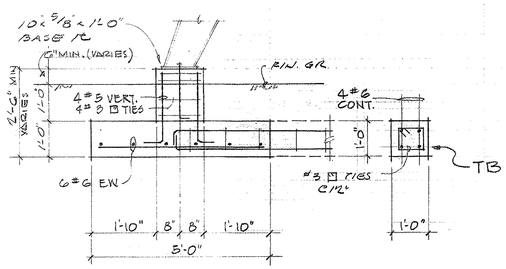

SECTION

FOOTING F-3 DET.

SCALE : 1/2" = 1'-0"

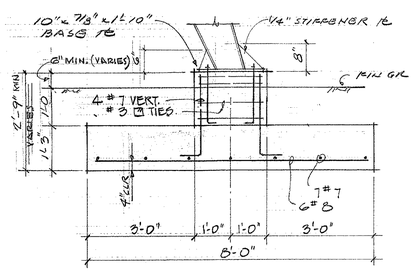

SECTION

FOOTING F-4 DET.

SCALE : 1/2" = 1'-0"

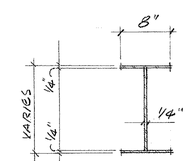

TYP. CANT. FRAME DETAIL

DETAIL 2 S-10

1" = 1'-0

VEHICLE SHED

STATE OF HAWAII
DEPARTMENT OF TRANSPORTATION
HIGHWAYS DIVISION

OAHU DISTRICT BASEYARD FACILITIES
SHAFTER FLATS INDUSTRIAL DEVELOPMENT
AT MOANALUA, HONOLULU, OAHU, HAWAII

TYP. FRAME DETAILS

HERBERT Y. MATSUMURA — ARCHITECT A.I.A.
871 KAPIOLANI BLVD. — HONOLULU, HAWAII

HAROLD TAKASHI MIYAMOTO
REGISTERED PROFESSIONAL ENGINEER
No. 1514
HAWAII, U.S.A.

THIS WORK WAS PREPARED BY ME OR UNDER MY SUPERVISION

SHEET No. S-10 OF 42 SHEETS

ORIGINAL PLAN		DATE
	SURVEY PLOTTED BY	
	DRAWN BY	" " "
	TRACED BY	" " "
NOTE BOOK	DESIGNED BY	" " "
	QUANTITIES BY	
No.	CHECKED BY	

PRINTED ON NO. 1000H CLEARPRINT