FED. ROAD DIST. NO.	STATE	PROJ. NO.	FISCAL YEAR	SHEET NO.	TOTAL SHEETS
HAWAII	HAW.	HWY-0-09-06	2008	9	46

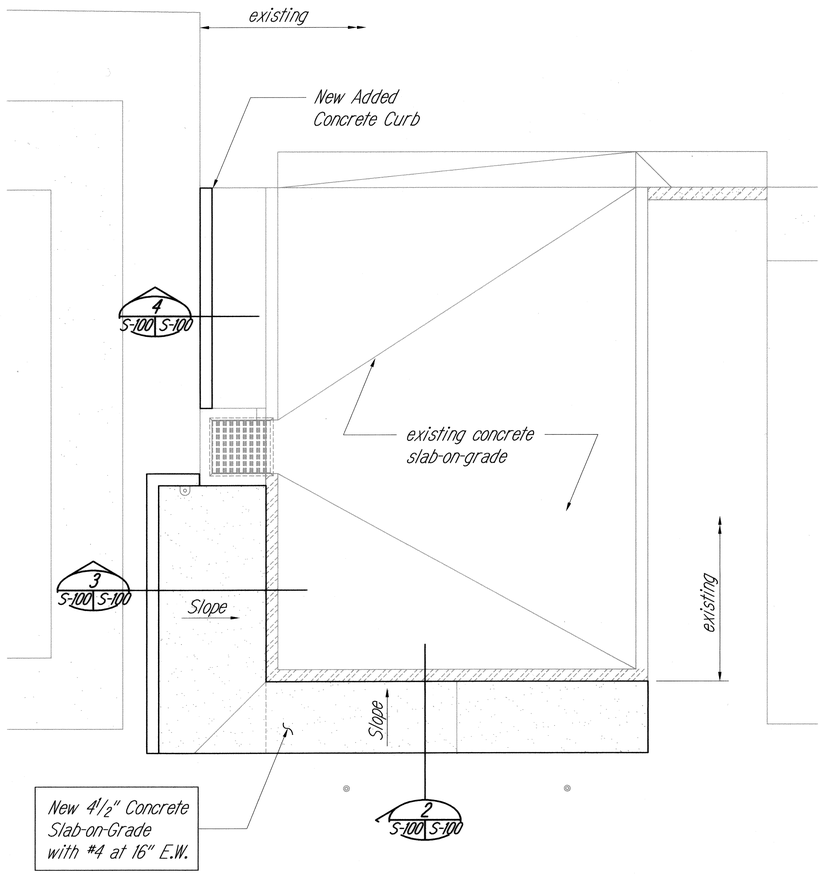

WASH DOWN RACK FOUNDATION PLAN (1 / S-100 S-100)
Scale: 1/4" = 1'-0"

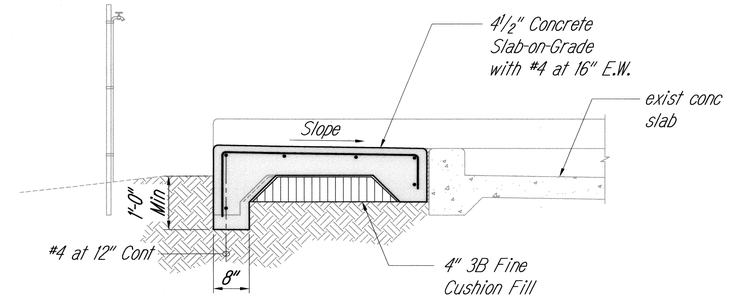

SECTION (2 / S-100 S-100)
Scale: 3/4" = 1'-0"

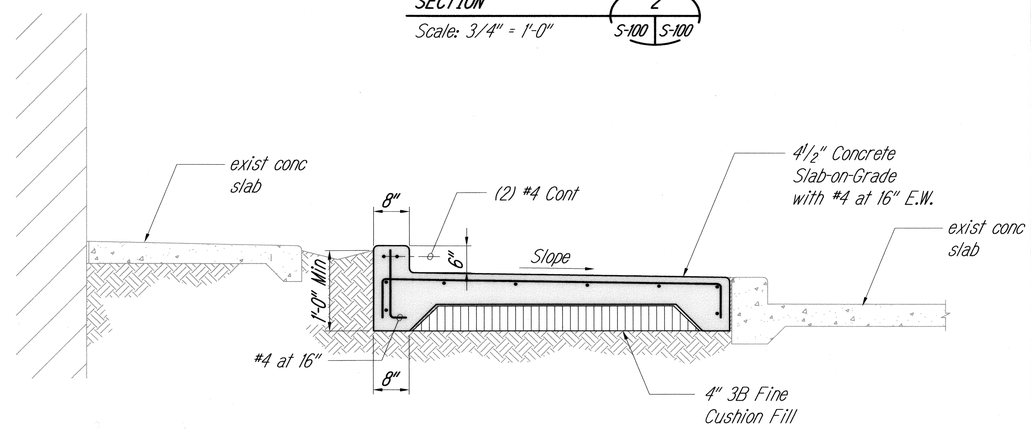

SECTION (3 / S-100 S-100)
Scale: 3/4" = 1'-0"

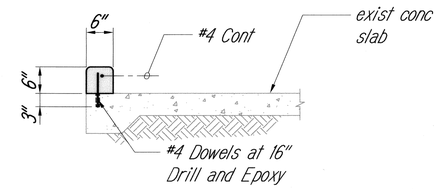

SECTION (4 / S-100 S-100)
Scale: 3/4" = 1'-0"

ORIGINAL PLAN		DATE
	SURVEY PLOTTED BY	
	DRAWN BY	
	TRACED BY	
NOTE BOOK	DESIGNED BY	
	QUANTITIES BY	
No.	CHECKED BY	

KEN KAZUO HAYASHIDA
LICENSED PROFESSIONAL ENGINEER
No. 6818-S
HAWAII, U.S.A.

EXPIRATION DATE OF THE LICENSE 4/30/2010
THIS WORK WAS PREPARED BY ME OR UNDER MY SUPERVISION

STATE OF HAWAII
DEPARTMENT OF TRANSPORTATION
HIGHWAYS DIVISION

KANEOHE BASEYARD WASHDOWN

KANEOHE, PEARL CITY AND WAIANAE
BASEYARD WASHDOWN RACKS
Project No. HWY-0-09-06

SCALE: AS NOTED DATE: MAY 2008

SHEET No. S-100 OF 46 SHEETS

Accounting\Current Projects\Drafting\2008-05-28_167 | baseyard\167_S-100_kaneohe.dwg, 16, 5/29/2008 9:30:51 AM, tamanaha