FED. ROAD DIST. NO.	STATE	PROJ. NO.	FISCAL YEAR	SHEET NO.	TOTAL SHEETS
HAWAII	HAW.	HWY-0-18-98	1999	4	12

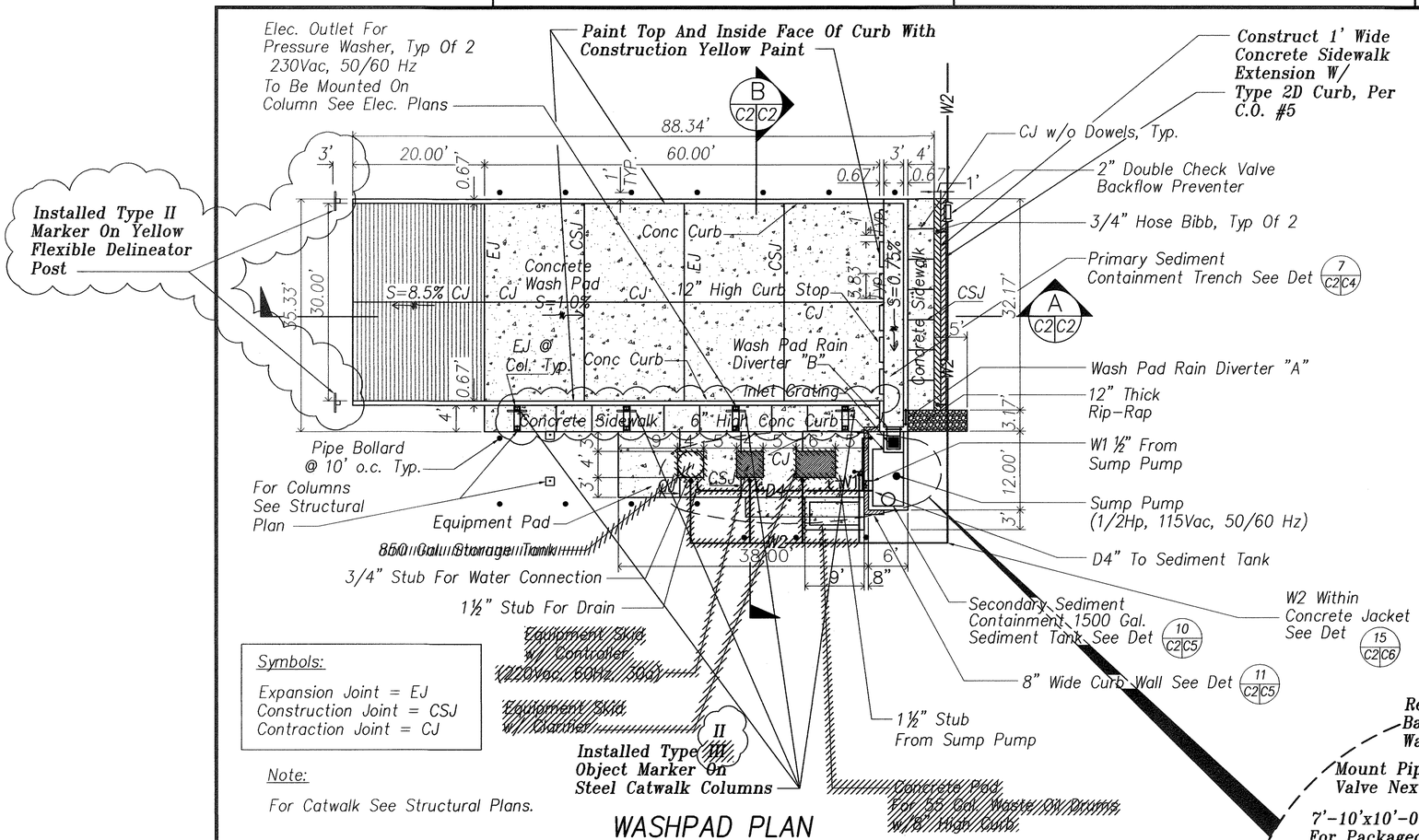

WASHPAD PLAN

Scale: 1" = 10'

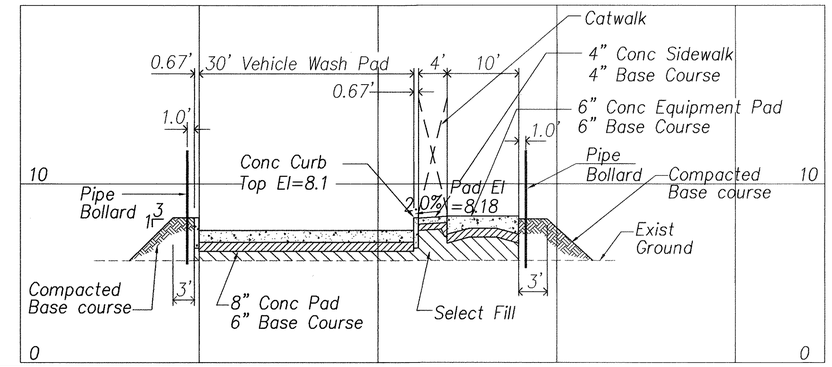

SECTION B C2C2

Scale: Horiz 1" = 10'
Vert 1"=4'

LEGEND

EXISTING	DESCRIPTION
	SINGLE LINE FOR AS-BUILT DELETION
	HATCH LINE FOR AS-BUILT DELETION
WASTE OIL TANK	HATCH LINE FOR TEXT AS-BUILT DELETION
WASHPAD	TEXT FOR AS-BUILT POSTING

NOTES:

1. For Conc Pavement See Det 1 C2C3
2. For Conc Sidewalk See Det 2 C2C3
3. For Conc Curb See Det 5 C2C3
4. For Conc Equipment Pad And Waste Oil Drum Pad See Det 8 C2C4
5. For Wash Pad Rain Diverter See Det 9 C2C4
6. For Bollard See Det 3 C2C3
7. For Hose Bibb See Det 16 C2C6
8. For Backflow Preventer See Det 12 C2C6
9. Coordinate Actual Locations For Piping And Conduits With Washwater Equipment Supplier 8 C2C4

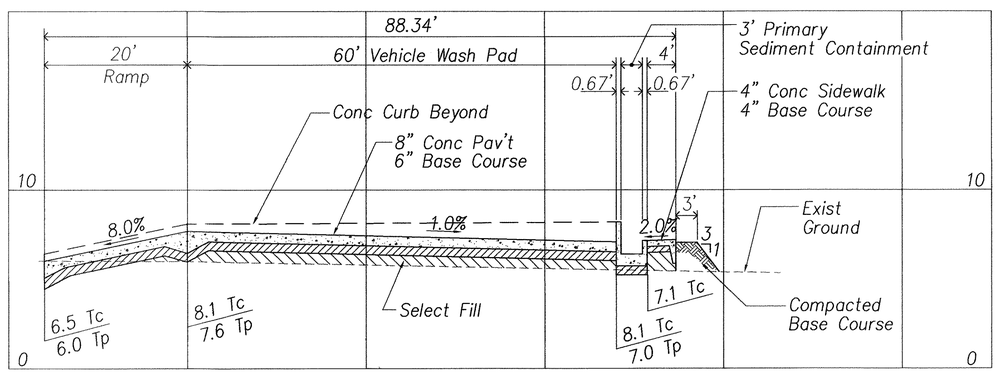

SECTION A C2C2

Scale: Horiz 1" = 10'
Vert 1"=4'

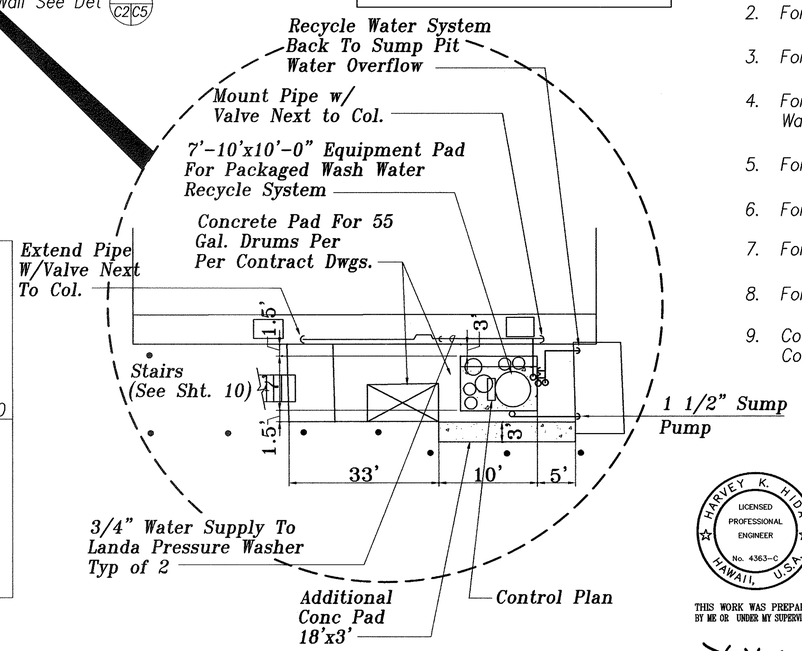

HARVEY K. HIDA
LICENSED PROFESSIONAL ENGINEER
No. 4363-C
HAWAII, U.S.A.

THIS WORK WAS PREPARED BY ME OR UNDER MY SUPERVISION

SIGNATURE
5-4-2001
DATE

STATE OF HAWAII
DEPARTMENT OF TRANSPORTATION
HIGHWAYS DIVISION

WASHPAD PLAN & SECTIONS

KEEHI BASEYARD WASHDOWN AREA
PROJECT NO. HWY-0-18-98

SCALE: AS NOTED DATE: OCT. 1998

SHEET No. C2 OF 12 SHEETS

ORIGINAL PLAN | NOTE BOOK No. | SURVEY PLOTTED BY | DRAWN BY | TRACED BY | DESIGNED BY | QUANTITIES BY | CHECKED BY | DATE

AS-BUILT

\PROJECTS\1288.1 keehi dot as-built\1288.1 C-2.dwg Fri May 04 10:39:43 2001