FED. ROAD DIST. NO.	STATE	FED. AID PROJ. NO.	FISCAL YEAR	SHEET NO.	TOTAL SHEETS
HAWAII	HAW.	M-3400(1)	1984	2	8

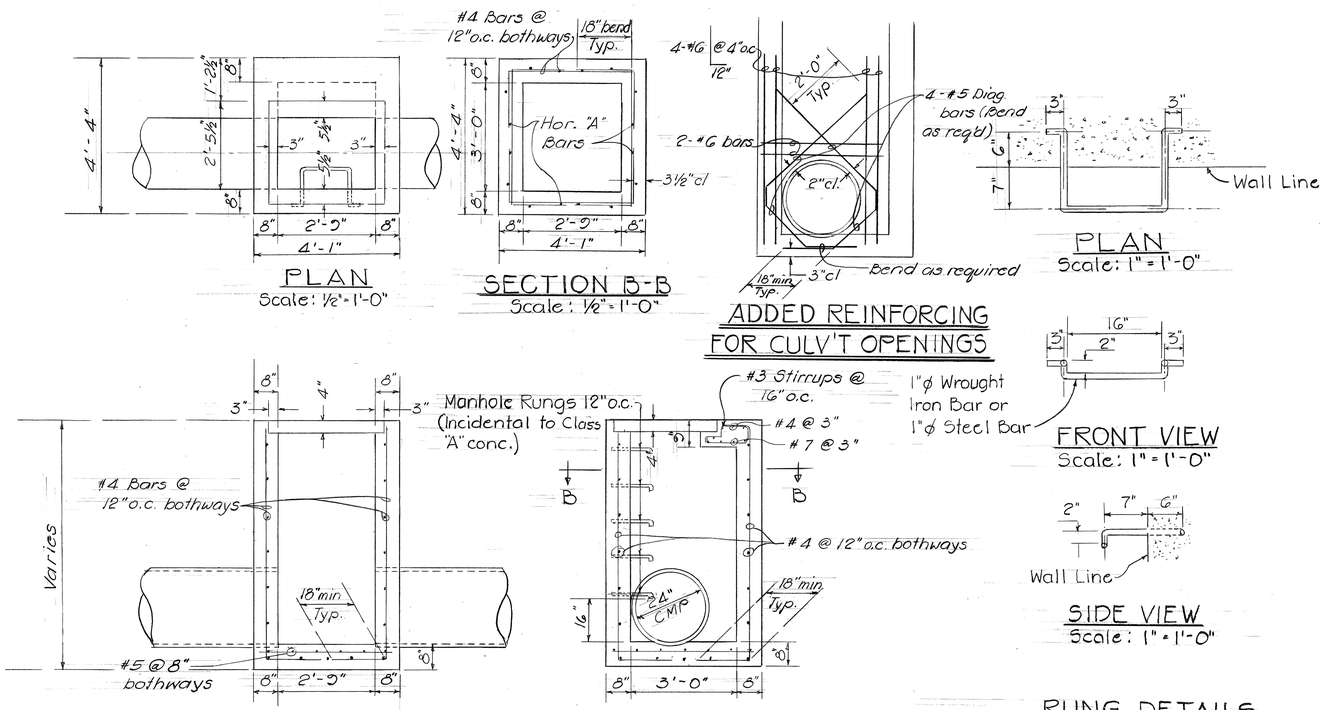

TYPE A-12P GRATED DROP INTAKE DETAILS

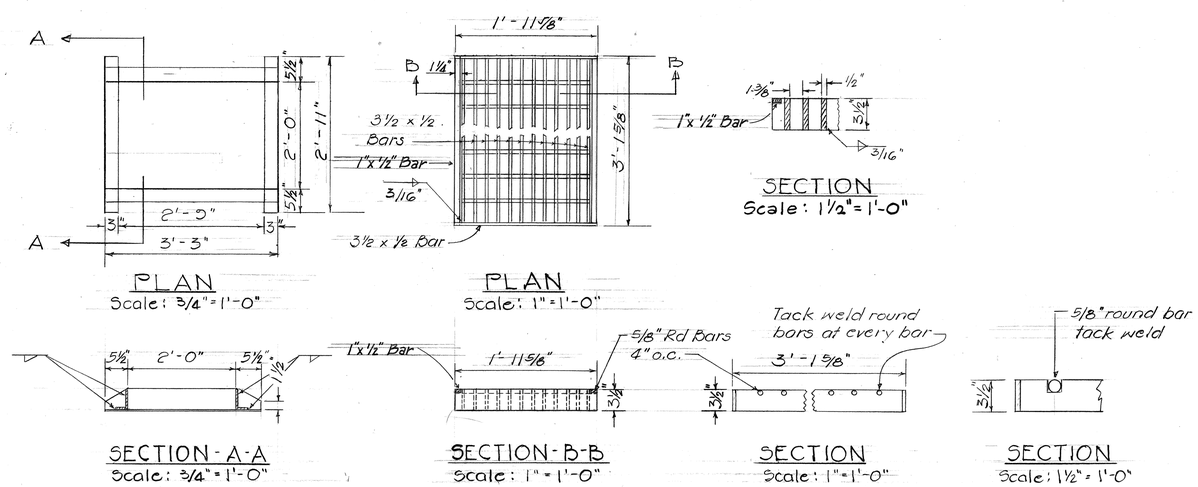

GENERAL NOTES

1. The Project begins on Waiehu Beach Road at the intersection of Ukali Street and extends approximately 564 feet towards Eha Street. Improvements consist of constructing storm drain manholes, grated drop intakes, installing 24" CMP drainage lines to tie in all drainage structures to the existing 84" storm drain pipe at Eha Street, and restoring the existing street and roadway shoulder.
2. The stationline of the existing roadway is shown on the plans to designate approximate locations of work to be done and determine approximate quantities. Exact locations of manholes and grated drop intakes will be determined in the field by the Engineer.
3. The Contractor's attention is directed to Subsection 102.05 - Examination of Plans, Specifications, Special Provisions, Site of Work, etc.; Subsection 107.13 - Public Convenience and Safety and Section 645 - Traffic Control of the Special Provisions
4. The bituminous gutter grades shall be determined in the field by the Engineer.
5. Restoration of existing asphalt pavement shall be paid under Item 662.1000 - Restoration of Existing Roadway and Other Improvements. Restoration of monument, striping and pavement markings shall not be paid separately and is incidental to Item 662.1000 - Restoration of Existing Roadway and Other Improvements.
6. Any fences, mailboxes, signs or other public or private property adjacent to the roadway that is disturbed, removed, or damaged by the Contractor during his construction operations shall be replaced or repaired by the Contractor at his expense as directed by the Engineer.
7. The existence and location of underground utilities, manholes, monuments and structures as shown on the plans are from the latest available data but accuracy is not guaranteed. The encountering of other obstacles during the course of the work may be possible. The Contractor shall be held liable for any damages incurred to the existing facilities as a result of his operations. All damaged portions shall be replaced in accordance with the Standards and Specifications of the State and/or the affected utility company.

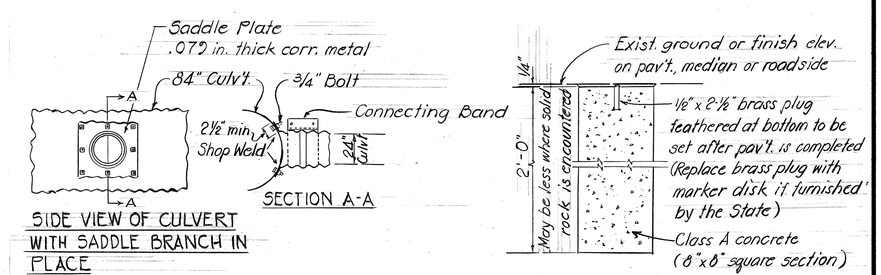

DETAIL - CULVERT CONNECTION TO EXISTING 84" CULVERT
Not to scale

DETAIL FOR CENTERLINE & REFERENCE SURVEY MONUMENT
Scale: 1-½"=1'-0"

ORIGINAL PLAN	SURVEY PLOTTED BY	DATE
	DRAWN BY	" " " "
	TRACED BY	
NOTE BOOK	DESIGNED BY	
No.	QUANTITIES BY	
	CHECKED BY	

STATE OF HAWAII
DEPARTMENT OF TRANSPORTATION
LAND TRANSPORTATION FACILITIES DIVISION

GENERAL NOTES AND DRAINAGE DETAILS

WAIEHU BEACH ROAD DRAINAGE IMPROVEMENTS, UKALI ST. TO EHA ST
F.A. Project No. M-3400(1)
SCALE: AS SHOWN 7/83

SHEET No. 1 OF 1 SHEETS

2