FED. ROAD DIST. NO.	STATE	FED. AID PROJ. NO.	FISCAL YEAR	SHEET NO.	TOTAL SHEETS
HAWAII	HAW.	NH-0380(9)	2000	163	380

INDEX TO BRIDGE DRAWINGS

SHEET NO.	DESCRIPTION	SHEET NO.	DESCRIPTION
S-1	Index To Bridge Drawings and Abbreviations	S-31	Drilled Shaft Details
S-2	Structural General Notes	S-32	Concrete Railing Details
S-3	Paleaahu Stream Bridge Plan, Elevation and Section	S-33	Existing Concrete Railing Upgrade
S-4	Paleaahu Stream Bridge Foundation Plan and Spot Elevations	S-34	Metal Bikeway Railing Details
S-5	Paleaahu Stream Bridge Abutment Sheet 1 of 4	S-35	Deck Joint and Approach Slab Details
S-6	Paleaahu Stream Bridge Abutment Sheet 2 of 4	S-36	Miscellaneous Details - 1
S-7	Paleaahu Stream Bridge Abutment Sheet 3 of 4	S-37	Miscellaneous Details - 2
S-8	Paleaahu Stream Bridge Abutment Sheet 4 of 4	S-38	CMU Noise Wall Plan & Elevation 1
S-9	Paleaahu Stream Bridge Prestressed Beam Details	S-39	CMU Noise Wall Plan & Elevation 2
S-10	Paleaahu Stream Bridge Deck Reinforcement and Framing Plan	S-40	CMU Noise Wall Plan & Elevation 3
S-11	Waikapu Stream Bridge Plan, Elevation and Section	S-41	CMU Noise Wall Plan & Elevation 4
S-12	Waikapu Stream Bridge Foundation Plan and Spot Elevations	S-42	CMU Noise Wall Plan & Elevation 5
S-13	Waikapu Stream Bridge Abutment Sheet 1 of 4	S-43	CMU Noise Wall Plan & Elevation 6
S-14	Waikapu Stream Bridge Abutment Sheet 2 of 4	S-44	CMU Noise Wall Plan & Elevation 7
S-15	Waikapu Stream Bridge Abutment Sheet 3 of 4	S-45	CMU Noise Wall Plan & Elevation 8
S-16	Waikapu Stream Bridge Abutment Sheet 4 of 4	S-46	CMU Noise Wall Plan & Elevation 9
S-17	Waikapu Stream Bridge Prestressed Beam Details - 1	S-47	CMU Noise Wall Plan & Elevation 10
S-18	Waikapu Stream Bridge Prestressed Beam Details - 2	S-48	CMU Noise Wall Plan & Elevation 11
S-19	Waikapu Stream Bridge Deck Reinforecement and Framing Plan	S-49	CMU Noise Wall Plan & Elevation 12
S-20	Waihee Ditch Bridge Plan and Longitudinal Section	S-50	CMU Noise Wall Plan & Elevation 13
S-21	Waihee Ditch Bridge Foundation Plan and Spot Elevations	S-51	CMU Noise Wall Plan & Elevation 14
S-22	Waihee Ditch Bridge Abutment Sheet 1 of 3	S-52	CMU Noise Wall Plan & Elevation 15
S-23	Waihee Ditch Bridge Abutment Sheet 2 of 3	S-53	CMU Noise Wall Plan & Elevation 16
S-24	Waihee Ditch Bridge Abutment Sheet 3 of 3	S-54	CMU Noise Wall Details
S-25	Waihee Ditch Bridge Precast R.C. Plank Details		
S-26	Waihee Ditch Bridge Deck Reinforcement and Framing Plan		
S-27	Kuihelani Three Span Culvert Plan, Elevation and Section		
S-28	Kuihelani Three Span Culvert Foundation Plan and Spot Elevations		
S-29	Kuihelani Three Span Culvert Wingwall Details		
S-30	Excavation and Backfill Payment Limits		

SYMBOLS AND ABBREVIATIONS

A.C.	Asphalt Concrete	Horiz.	Horizontal
Add.	Additional	H.S.	High Strength
ASTM	American Society For Testing & Materials	JT.	Joint
AZ.	Azimuth	Lc.	Length of Curve
(B), B., or BOT	Bottom	lg.	Long
		Max.	Maximum
B.C.	Bottom of Curve	Min.	Minimum
℄	Baseline	No. or #	Number
BRG.	Bearing	N.T.S.	Not To Scale
(C)	Contraction or Control Joint	O.C.	On Centers
C.C.	Center of Curve or Center to Center	o/s	Offset
℄	Centerline	PL	Plate
CL., Clr.	Clear	R	Radius
CRM	Cement Rubble Masonry	R.C.	Reinforce Concrete
Conc.	Concrete	ref.	Reference
Cont.	Continuous	reinf.	Reinforcement
Const.	Construction	Sht. No.	Sheet Number
CMU	Concrete Masonry Unit	Std.	Standard
dwgs.	Drawings	(T) or T.	Top
(E)	Expansion Joints or Expansion Bearing	TYP.	Typical
e.a.	Each	Var.	Varies
El., Elev.	Elevation	Vert.	Vertical
FIN. GR.	Finished Grade	w/	With
ft.	Foot	ø or Dia.	Diameter
ga.	Gage	&	And
galv.	Galvanized	±	Plus or Minus
(H)	Hinge Bearing		

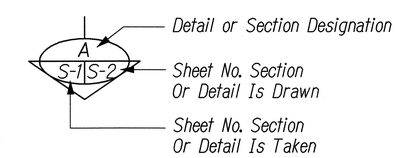

ORIGINAL PLAN	SURVEY PLOTTED BY ____ DATE
	DRAWN BY . . . .
	TRACED BY . . . .
NOTE BOOK	DESIGNED BY . . . .
No. ____	QUANTITIES BY
	CHECKED BY

h:/KUIHELANI/MISC/GP-INDEX.dgn

HUI PANG CHEN
LICENSED PROFESSIONAL ENGINEER
No. 3865-S
HAWAII, U.S.A.

THIS WORK WAS PREPARED BY ME OR UNDER MY SUPERVISION.

Hui Pang Chen

STATE OF HAWAII
DEPARTMENT OF TRANSPORTATION
HIGHWAYS DIVISION

INDEX TO DRAWINGS & ABBREVIATIONS

KUIHELANI HIGHWAY WIDENING
HONOAPIILANI HIGHWAY TO PUUNENE AVENUE
FEDERAL-AID PROJECT NO. NH-0380(9)

Scale: None — Date: Sept. 14, 2001

SHEET No. S-1 OF 54 SHEETS

FED. ROAD DIST. NO.	STATE	FED. AID PROJ. NO.	FISCAL YEAR	SHEET NO.	TOTAL SHEETS
HAWAII	HAW.	NH-0380(9)	2000	164	380

1. GENERAL SPECIFICATIONS: Hawaii Standard Specifications for Road, Bridge, and Public Works construction, 1994. Together with Special Provisions prepared for this contract.

2. DESIGN SPECIFICATIONS: "AASHTO LRFD Bridge Design Specifications," Second Edition, 1998, with 1999 Interim.

3. LOADS:
   A. Dead Load: An allowance of 2 inches for future wearing surface of asphalt concrete has been provided for in the design.
   B. Live Load: HL-93.
   C. Seismic Load: Acceleration Coefficient = 0.26.
      Seismic Performance Zone = 3.
      Importance Category = Essential Bridge Soil Profile Type I.
   D. Railing Test Level = TL-4.

4. MATERIALS:
   A. Minimum concrete compressive strength (at 28 days) shall be as follows unless otherwise noted:
      1) Deck Slab = 3750 psi (Class BD)
      2) All other concrete = 4000 psi unless otherwise noted
   B. All reinforcing steel shall conform to ASTM A615, Grade 60, unless otherwise noted.
   C. All drilled shaft spiral reinforcing shall be deformed reinforcing bars conforming to ASTM A615, Grade 60.
   D. All miscellaneous steel shall conform to ASTM A36 and be hot dip galvanized after fabrication, unless otherwise noted.
   E. All pipe sections shall conform to ASTM A53 (Type E), Grade B, and be hot dip galvanized after fabrication.
   F. All structural tube sections shall conform to ASTM A500, Grade B, and be hot dip galvanized after fabrication.
   G. All anchor bolts, washers and nuts shall conform to ASTM A307 and be hot dip galvanized after fabrication, unless otherwise specified.
   H. For materials of prestressed concrete girders, see applicable prestressed concrete notes.
   I. Elastomeric bearing pads shall be 60 hardness. Steel laminations shall be 1/8 inches thick ASTM A36 Steel Plates.

5. REINFORCEMENT:
   A. Unless otherwise noted, the covering measured from the surface of the concrete to the face of any reinforcing bars shall be as follows:
      1) Deck Slabs
         A) Top Bars = 2"
         B) Bottom Bars = 1 1/4"
      2) Railings and Parapets = 2"
      3) For Prestressed Concrete Girders, see Prestressed Concrete Girder Details.
      4) Abutment Walls and Wing Walls = 2"
      5) Concrete Cast against and permanently exposed earth = 3"
      6) Drilled Shafts = 3" (to spirals)
   B. Reinforcing bars shall be detailed in accordance with ACI Detailing manual for reinforced concrete highway structures unless otherwise noted.
   C. Minimum clear spacing between parallel bars shall be 1 1/2 times the diameter of bars (For non bundled bars) or 1 1/2 times the diameter derived from the equivalent total area of the bars (for bundled bars), but in no case shall the clear distance between the parallel bars be less than 1 1/2 times the maximum size of the coarse aggregate or 1 1/2 inches.
   D. All dimensions relating to reinforcing bars (e.g. spacing of bars, etc.) are to centers of bars unless otherwise noted.
   E. Reinforcing bars shall be securely tied at all intersections and lap splices except where the spacing of intersections is less than one foot in each direction, in which case alternate intersections shall be tied.
   F. All bars shown with bends shall conform to standard ACI Hooks unless otherwise noted.
   G. Vertical drilled shaft bars shall be arranged in such a manner as to avoid interference with footing bars. Top bends of vertical bars shall be arranged to fit within limits of the footing. Minimum embedment shown shall be provided. No bars shall be cut.

6. GIRDER BEARINGS:
   A. Bearing surface shall be smooth and level. Girders shall be set on a fresh layer of mortar to insure full bearing.
   B. Girder seat elevations shall be verified by the Contractor. Seat elevations shall take into consideration the vertical roadway curve differential, deck slab thickness, minimum haunch required, girder depth, and the calculated or, if available, the actual camber of the girders.
   C. The concrete seat and elastomeric bearing pad shall be placed as shown.

7. CONSTRUCTION NOTES:
   A. See Standard Specifications and Special Provisions.
   B. Top of concrete deck slab shall be constructed to follow the roadway finish grades. The Contractor shall set deck slab forms to account for anticipated deflection of girders during placement of concrete for deck slab and diaphragms. Also, see prestressed girder notes.
   C. Unless otherwise noted, all vertical dimensions are measured plumb.
   D. The Contractor shall verify all site conditions before commencing with work.
   E. The Contractor shall verify the location of all utility lines and notify the respective owners before commencing the work of excavation or drilled shafts.
   F. For concrete finish, see Standard Specifications.
   G. Construction joints may be relocated or additional ones added subject to the approval of the Engineer.
   H. Unless otherwise noted, all exposed concrete edges shall be chamfered 3/4"x3/4".
   I. Elastomeric bearing pads shall be secured to the concrete bearing surface with adhesives or other means necessary as approved by the Engineer.
   J. The Contractor shall restrain the girders in the longitudinal direction during placement.
   K. Shoring shall be provided for the existing bridge footings during construction of the new abutment footings as required.
   L. All slopes and exposed areas of slope steeper than 3H: 1V shall be Hydro-Mulch seeded and covered with erosion control matting as soon as final grades have been established in accordance with the Specifications and Grading plan. Planting shall not be delayed until all grading work has been completed. Grading to final grade shall be continuous, and any area within which work has been interrupted or delayed shall be planted.

8. GENERAL:
   A. All items noted incidental will not be paid for separately.
   B. Standard detail drawings refer to all structures in general, except for modifications as may be required for special conditions. For such modifications, refer to the corresponding detailed drawings.
   C. The Contractor shall comply with all construction permits for this project. In addition, the Contractor shall be responsible for obtaining and complying with any NPDES permits and licenses that may be required for the work.
   D. The Contractor shall utilize appropriate erosion control measures during construction and shall perform construction activities affecting or affected by the stream only during periods of low stream flow. The Contractor shall prevent debris and construction materials, including cement or concrete, petroleum products, and other pollutants from entering the stream. Wash and dust control water shall be properly disposed.
   E. In the event that subsurface cultural remains such as artifacts, burials or deposits of shells or charcoal are encountered during excavation work, the Contractor shall stop work in the area of the find and contact the Engineer immediately. Work may recommence only with Engineer's approval.

9. FOUNDATION:

   These foundation notes were based on recommendations contained in a foundation investigation report by Geolabs Hawaii, Inc. dated September 18, 2000. The report shall be considered as part of the construction documents and its recommendations shall be implemented unless otherwise ordered by the Engineer.

   A. Abutments and Wing Walls:
      1) Design Equivalent Fluid Pressure:
         Level Backfill:
         Active = 40 PCF
         At Rest = 60 PCF

      2) Backfill Material:

         a. The onsite clayey silt and highly to completely weathered basalt may be reused as backfill provided all rock fragments larger than 6 inches in maximum dimension are removed prior to compaction.
         b. Imported structural backfill shall be in accordance with the requirements for structure backfill material A as indicated in Section 703.20 of the Hawaii Standard Specifications for Road, Bridge, and Public Works Construction, 1994.
         c. Placement of the backfill material shall be in accordance with the Standard Specifications and the Special Provisions.
   B. Drilled Shafts
      1) The vertical load capacity for the 60 inch diameter drilled shafts are from friction between the shafts and the surrounding soils. The following net vertical load parameters were used for design:
         a) Abutment No. 1 and No. 2: Paleaahu Stream Bridge
            Strength Limit State = 510 kips
            Extreme Event Limit State = 780 kips
         b) Abutment No. 1 and No.2: Waikapu Stream Bridge
            Strength Limit State = 520 kips
            Extreme Event Limit State = 800 kips
      2) The following lateral load capacities for 60 inch drilled shafts (Fixed-Head Condition) were used for design.
         Abutment No. 1 and No. 2 = 172 kips
      3) The drilled shafts estimated tip elevation shown on the plans are based on the boring data. The actual tip elevation could change due to varying subsurface conditons. Soils Engineer of record shall be present during the drilling operation to determine that the actual subsurface conditions are consistent with the conditions assumed for design. Based on the recommendations, the tip elevations could change. The Contractor shall make provisions to account for variations in the final tip elevations.
      4) The Contractor shall exercise care in drilling the shaft holes and in placing concrete into the holes. Rock drilling/coring equipment will be required for drilled shafts extending through hard basalt layers. Temporary casing may be needed to reduce the potential for caving in of the holes. The use of permanent casing will not be allowed.
      5) Drilling shall not be conducted by methods utilizing drilling fluids.
      6) Concrete for drilled shafts shall be placed within 24 hours after drilling to reduce the potential for caving in.
      7) Since groundwater will likely be encountered in the drilled holes, placement of concrete shall be by tremie methods. A minimum of 10 feet of concrete head shall be maintained above the bottom of the tremie pipe during placement of concrete.
   C. Spread Footings:
      1) Bearing Pressure:
         Extreme Event Limit State = 9000 psf
         Strength Limit State = 4000 psf
         Service Limit State = 3000 psf
      2) Coefficient of Sliding Friction:
         Extreme Event Limit State = 0.35
         Strength Limit State = 0.28
      3) Passive Earth Pressure:
         Extreme Event Limit State = 300 pcf
         Strength Limit State = 150 pcf
   D. Noise Wall
      1) Design Equivalent Fluid Pressure, see Note 9A(1).
      2) Design Wind Pressure = 80 MPH Wind Velocity with 30% gust.
      3) Spread Footing, see Note 9C.

ORIGINAL PLAN	SURVEY PLOTTED BY	DATE
	DRAWN BY	
	TRACED BY	
NOTE BOOK	DESIGNED BY	
	QUANTITIES BY	
No.	CHECKED BY	

J:/KUIHELANI/STRUCT/ST-GN01.dgn

HUI PANG CHEN
LICENSED PROFESSIONAL ENGINEER
No. 3865-S
HAWAII, U.S.A.

THIS WORK WAS PREPARED BY ME OR UNDER MY SUPERVISION.

Hui Pang Chen

STATE OF HAWAII
DEPARTMENT OF TRANSPORTATION
HIGHWAYS DIVISION

STRUCTURAL GENERAL NOTES

KUIHELANI HIGHWAY WIDENING
HONOAPIILANI HIGHWAY TO PUUNENE AVENUE
FEDERAL-AID PROJECT NO. NH-0380(9)

Scale: None Date: Sept. 14, 2001

SHEET No. S-2 OF 54 SHEETS

FED. ROAD DIST. NO.	STATE	FED. AID PROJ. NO.	FISCAL YEAR	SHEET NO.	TOTAL SHEETS
HAWAII	HAW.	NH-0380(9)	2000	165	380

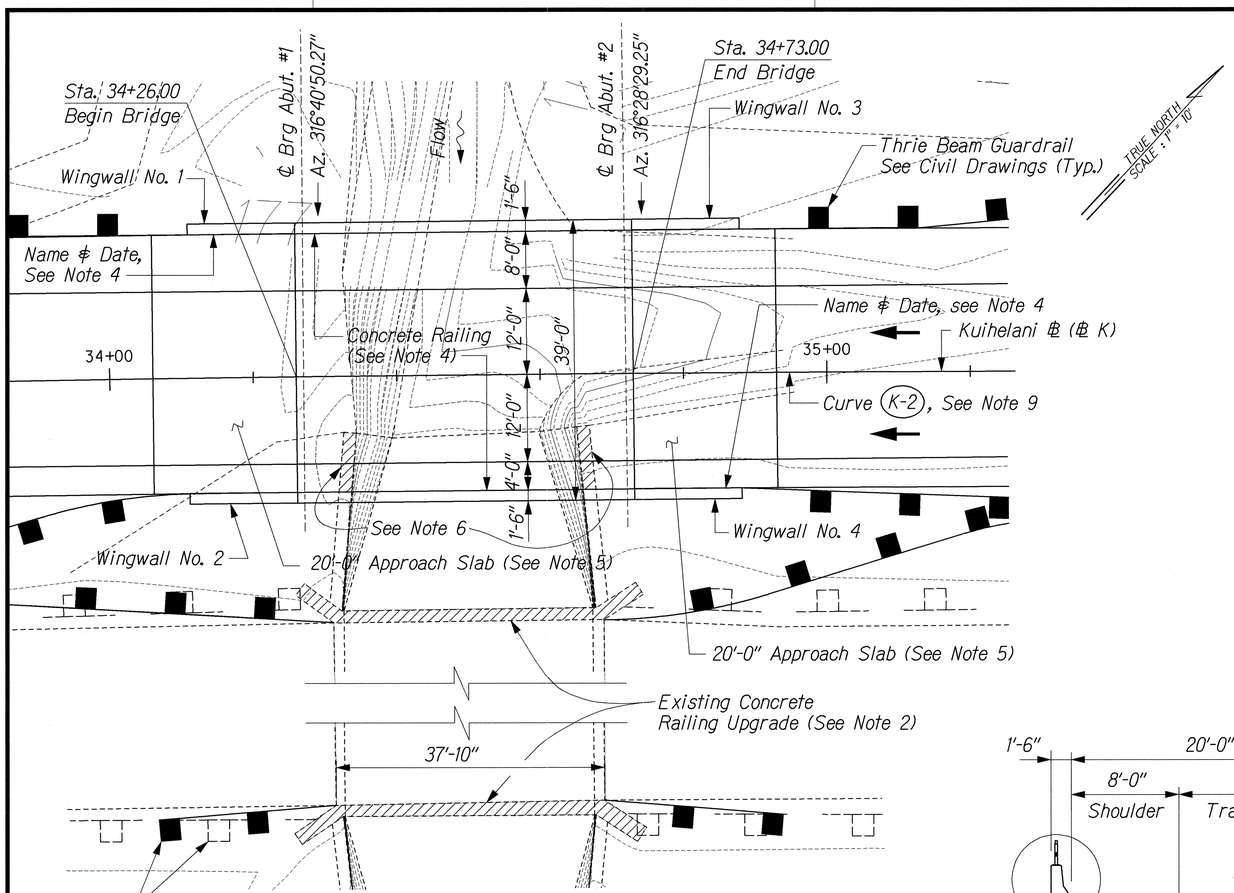

PLAN

Scale: 1" = 10'

ESTIMATED QUANTITIES

ITEM NO.	ITEM	UNIT	QUANTITIES
206.	Structure Excavation For Abutments & Walls	CY	407
206.	Structure Backfill For Abutments & Walls	CY	128
646.	Geocomposite Drain For Abutments & Walls	SY	62
503.	Concrete In Bridge (Except Footing)	LS	(116 CY)
503.	Concrete In Bridge Footing	LS	(96 CY)
503.	Concrete in Approach Slab	LS	(54 CY)
504.	AASHTO Type II Prestressed Concrete Beam	LF	281
507.	Concrete Railing (Include End Post)	LF	154
507.	Metal Bikeway Railing	LF	115
507.	Upgrade of Existing Concrete Railing	LF	76
511.	Drilled Shafts	LF	248
511.	Load Test For Drilled Shafts	EA	1
602.	Reinforcing Steel For Bridge	LS	(48,340 Lbs)

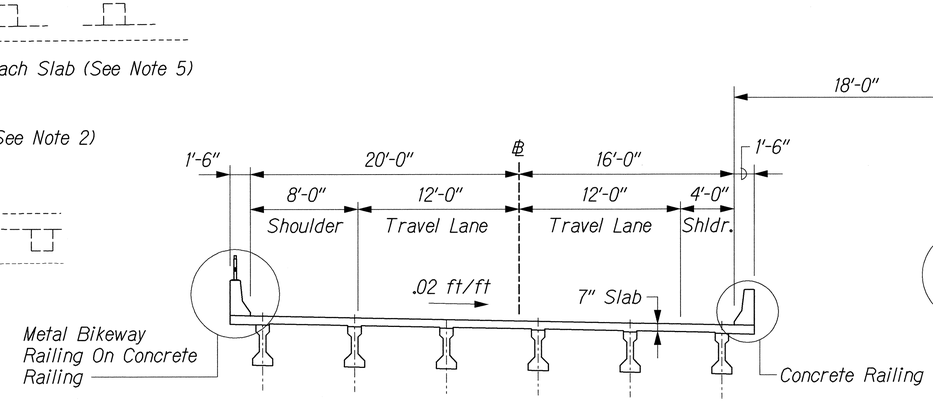

TYPICAL SECTION

Scale: 3/16" = 1'-0"

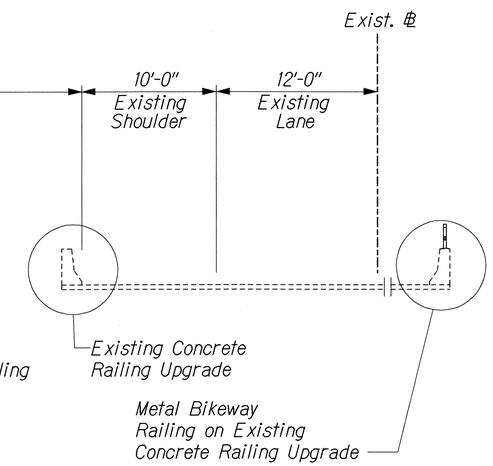

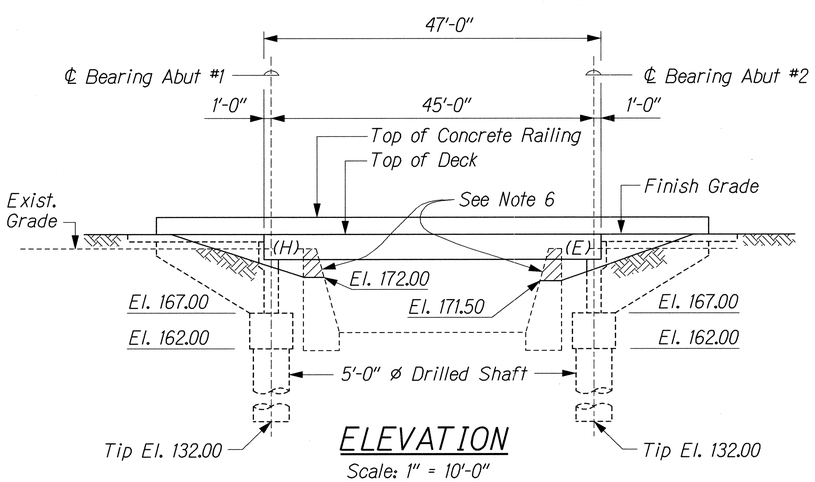

ELEVATION

Scale: 1" = 10'-0"

NOTES:

1. For General Notes, see Sht. No. S-2.
2. For Existing Concrete Railing Upgrade Details, See Sht. No. S-33.
3. For Drilled Shaft details and Cutoff Elevation, See Sht. No. S-31.
4. For Bridge Name & Date location, Concrete railing Details, See Sht. No. S-32.
5. For Approach Slab Details, See Sheet No. S-35.
6. Portion of existing CRM wall shall be removed to the elevations as shown. The removal of existing CRM wall shall be incidental to structural excavation.
7. For Metal Bikeway Railing Details, See Sheet No. S-34.
8. For Payment Limit, See Sheet No. S-30.
9. For curve data for Curve (K-2), See Alignment Plan Sheet No. A4.
10. For grading around abutments & wingwalls, See Civil Plans.

ORIGINAL PLAN	SURVEY PLOTTED BY	DATE
	DRAWN BY	
	TRACED BY	
NOTE BOOK	DESIGNED BY	
	QUANTITIES BY	
No.	CHECKED BY	

J:/KUIHELANI/STRUCT/BR01.dgn

HUI PANG CHEN
LICENSED PROFESSIONAL ENGINEER
No. 3865-S
HAWAII, U.S.A.

THIS WORK WAS PREPARED BY ME OR UNDER MY SUPERVISION.

Hui Pang Chen

STATE OF HAWAII
DEPARTMENT OF TRANSPORTATION
HIGHWAYS DIVISION

PALEAAHU STREAM BRIDGE
PLAN, ELEVATION AND SECTION
KUIHELANI HIGHWAY WIDENING
HONOAPIILANI HIGHWAY TO PUUNENE AVENUE
FEDERAL-AID PROJECT NO. NH-0380(9)

Scale: As Shown Date: Sept. 14, 2001

SHEET No. S-3 OF 54 SHEETS

FED. ROAD DIST. NO.	STATE	FED. AID PROJ. NO.	FISCAL YEAR	SHEET NO.	TOTAL SHEETS
HAWAII	HAW.	NH-0380(9)	2000	166	380

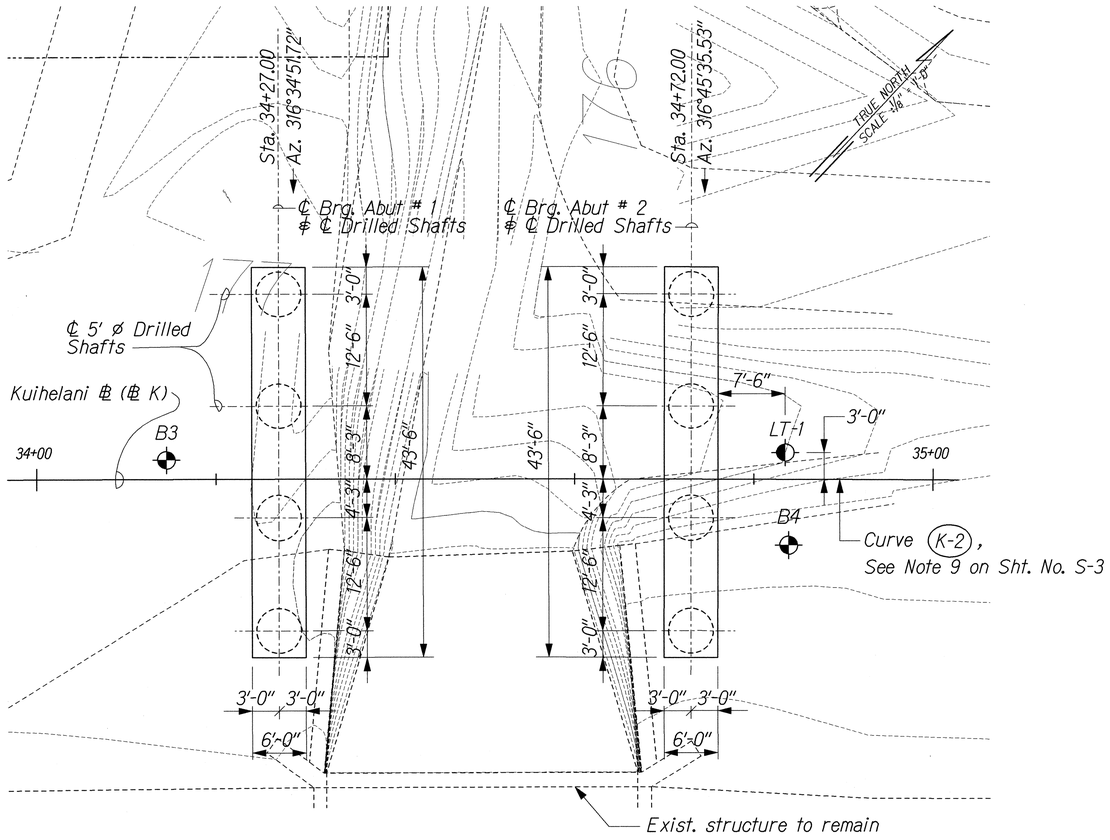

FOUNDATION PLAN

Scale: 1/8" = 1'-0"

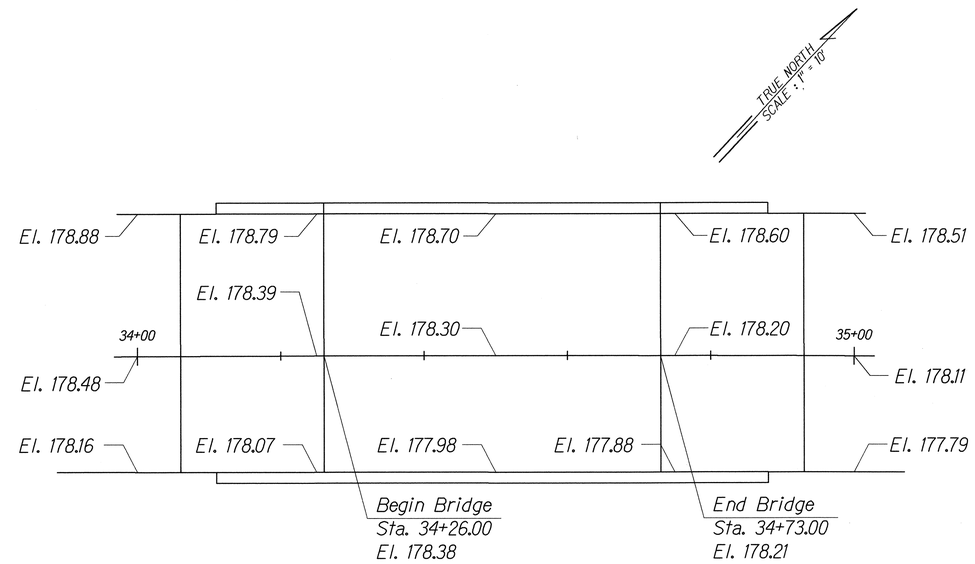

FINISH SPOT ELEVATIONS (@ 25'-0" INTERVALS)

Scale: 1" = 10'-0"

LEGEND:

B4 — Denotes Locations of Borings

LT-1 — Denotes Location of Trial and Load Test Shaft

NOTES:

1. For Boring Logs, See Sht. Nos. B1 to B12.
2. For Drilled Shaft Tip Elevations, See Sht. No. S-3.
3. For Drilled Shaft Details and Drilled Shaft Cutoff Elevations, See Sht. No. S-31.

ORIGINAL PLAN	SURVEY PLOTTED BY	DATE
	DRAWN BY	
	TRACED BY	
NOTE BOOK	DESIGNED BY	
	QUANTITIES BY	
No.	CHECKED BY	

J:\KUIHELANI\STRUCT\ST-DET4.dgn

HUI PANG CHEN
LICENSED PROFESSIONAL ENGINEER
No. 3865-S
HAWAII, U.S.A.

THIS WORK WAS PREPARED BY ME OR UNDER MY SUPERVISION.

Huipang Chen

STATE OF HAWAII
DEPARTMENT OF TRANSPORTATION
HIGHWAYS DIVISION

PALEAAHU STREAM BRIDGE
FOUNDATION PLAN & SPOT ELEVS.
KUIHELANI HIGHWAY WIDENING
HONOAPIILANI HIGHWAY TO PUUNENE AVENUE
FEDERAL-AID PROJECT NO. NH-0380(9)

Scale: 1/8" = 1'-0" Date: Sept. 14, 2001

SHEET No. S-4 OF 54 SHEETS

FED. ROAD DIST. NO.	STATE	FED. AID PROJ. NO.	FISCAL YEAR	SHEET NO.	TOTAL SHEETS
HAWAII	HAW.	NH-0380(9)	2000	167	380

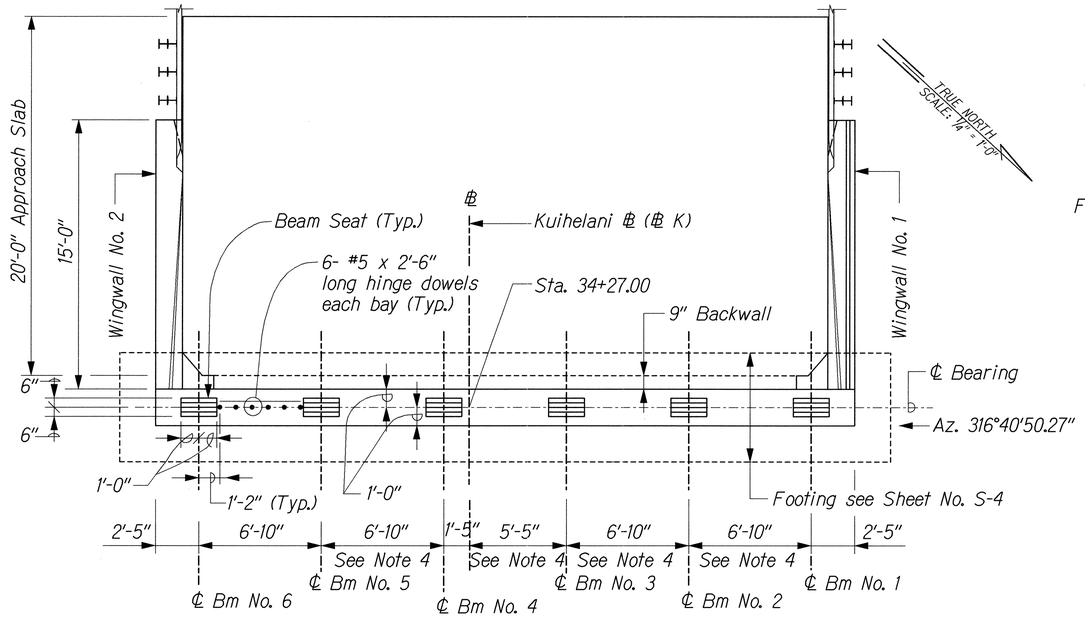

ABUTMENT NO. 1 PLAN

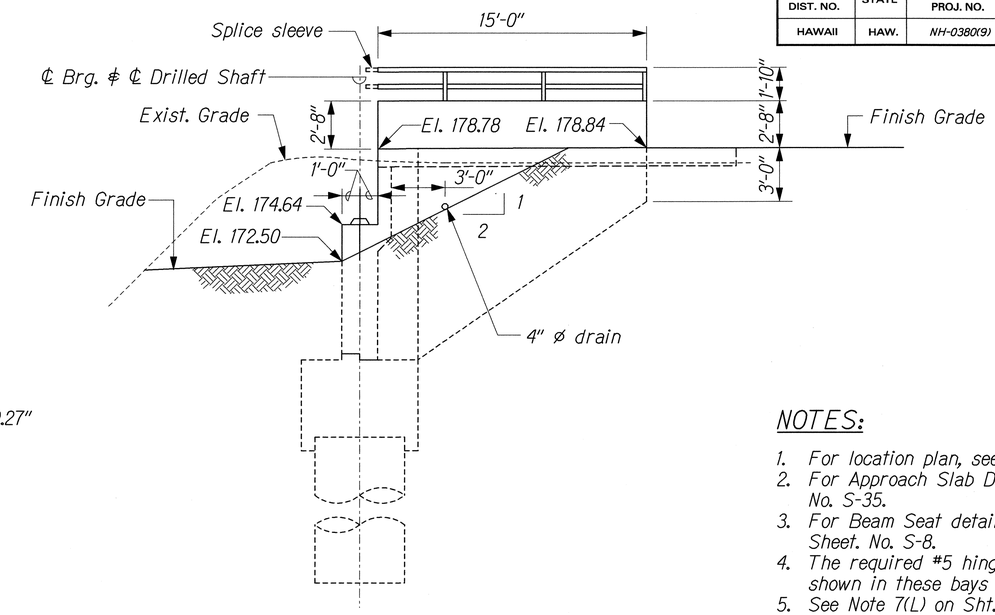

WINGWALL NO. 1 ELEVATION

NOTES:

1. For location plan, see Sheet No. S-3.
2. For Approach Slab Details, see Sheet No. S-35.
3. For Beam Seat details, see Sheet. No. S-8.
4. The required #5 hinge dowels not shown in these bays for clarity.
5. See Note 7(L) on Sht. No. S-2.

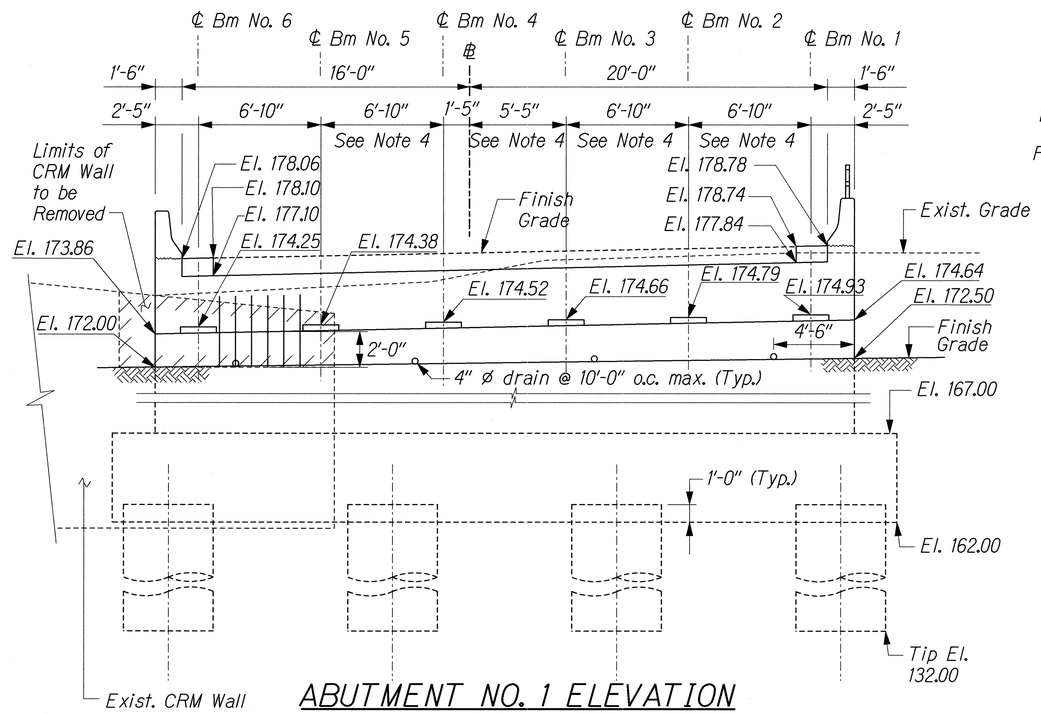

ABUTMENT NO. 1 ELEVATION

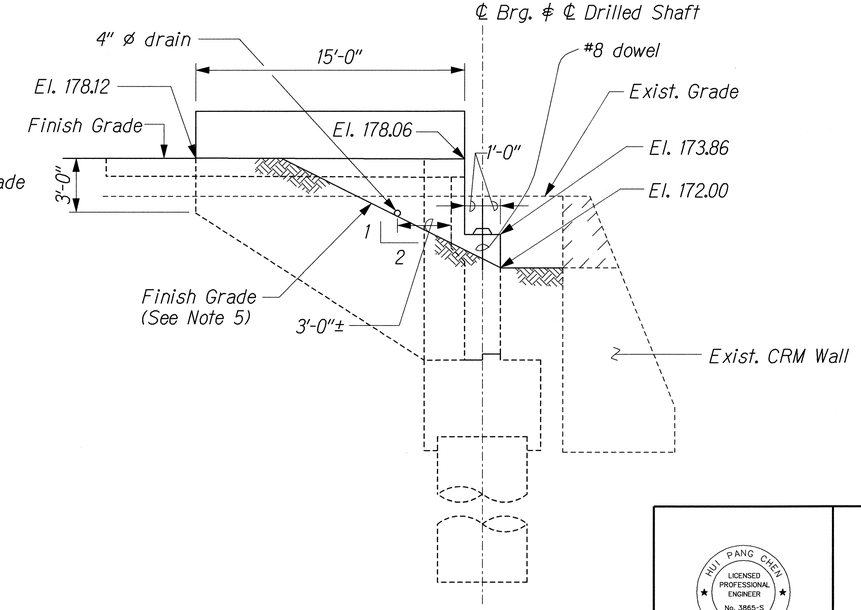

WINGWALL NO. 2 ELEVATION

ORIGINAL PLAN	SURVEY PLOTTED BY	DATE
	DRAFT BY	
	TRACED BY	
NOTE BOOK	DESIGNED BY	
	QUANTITIES BY	
No.	CHECKED BY	

b:/KUIHELANI/STRUCT/ST-DET9B.dgn

HUI PANG CHEN
LICENSED PROFESSIONAL ENGINEER
No. 3865-S
HAWAII, U.S.A.

THIS WORK WAS PREPARED BY ME OR UNDER MY SUPERVISION.

Huipang Chen

STATE OF HAWAII
DEPARTMENT OF TRANSPORTATION
HIGHWAYS DIVISION

PALEAAHU STREAM BRIDGE
ABUTMENT SHEET 1 OF 4
KUIHELANI HIGHWAY WIDENING
HONOAPIILANI HIGHWAY TO PUUNENE AVENUE
FEDERAL-AID PROJECT NO. NH-0380(9)

Scale: 1/4" = 1'-0" Date: Sept. 14, 2001

SHEET No. S-5 OF 54 SHEETS

FED. ROAD DIST. NO.	STATE	FED. AID PROJ. NO.	FISCAL YEAR	SHEET NO.	TOTAL SHEETS
HAWAII	HAW.	NH-0380(9)	2000	168	380

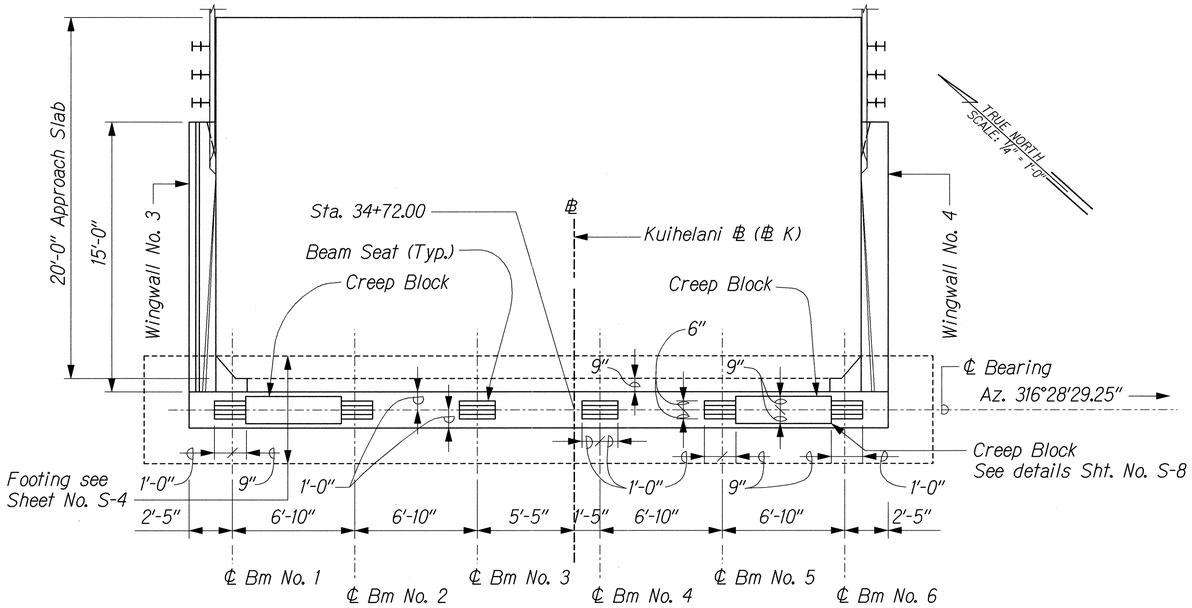

ABUTMENT NO. 2 PLAN

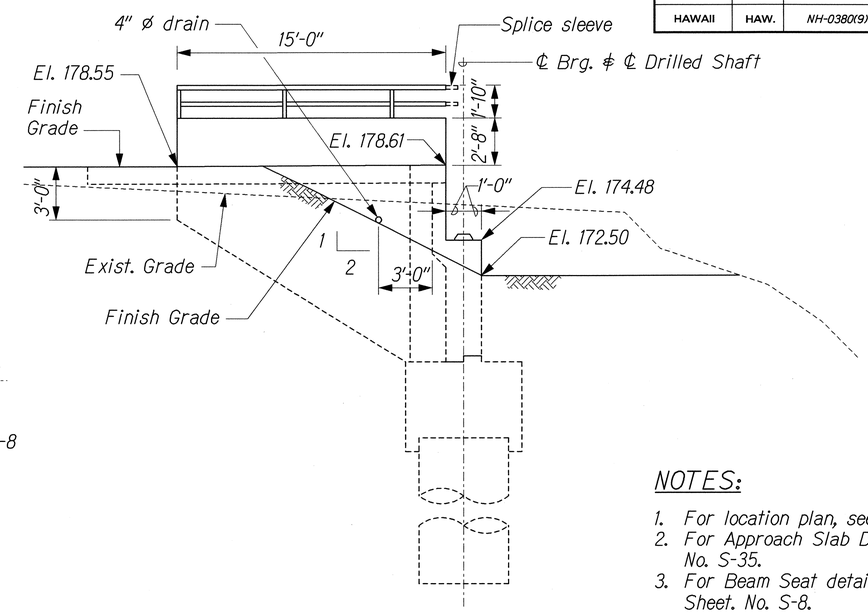

WINGWALL NO. 3

NOTES:

1. For location plan, see Sheet No. S-3.
2. For Approach Slab Details, see Sheet No. S-35.
3. For Beam Seat details, see Sheet. No. S-8.
4. For Creep Block details, see Sheet No. S-8.
5. See Note 7(L) on Sht. No. S-2.

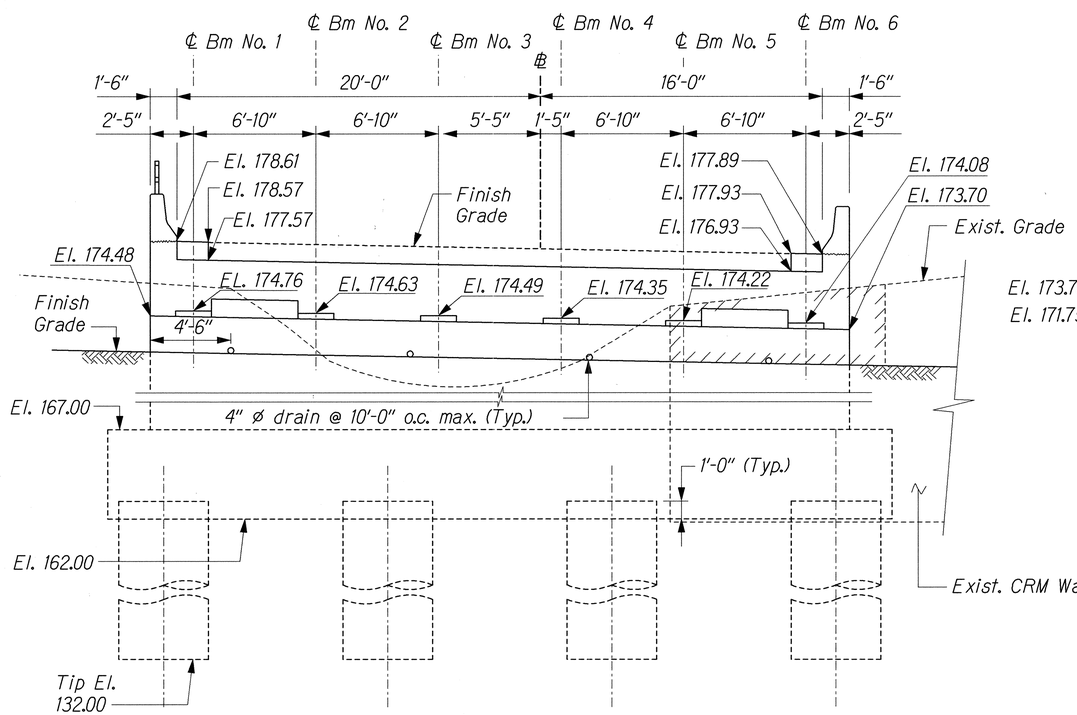

ABUTMENT NO. 2 ELEVATION

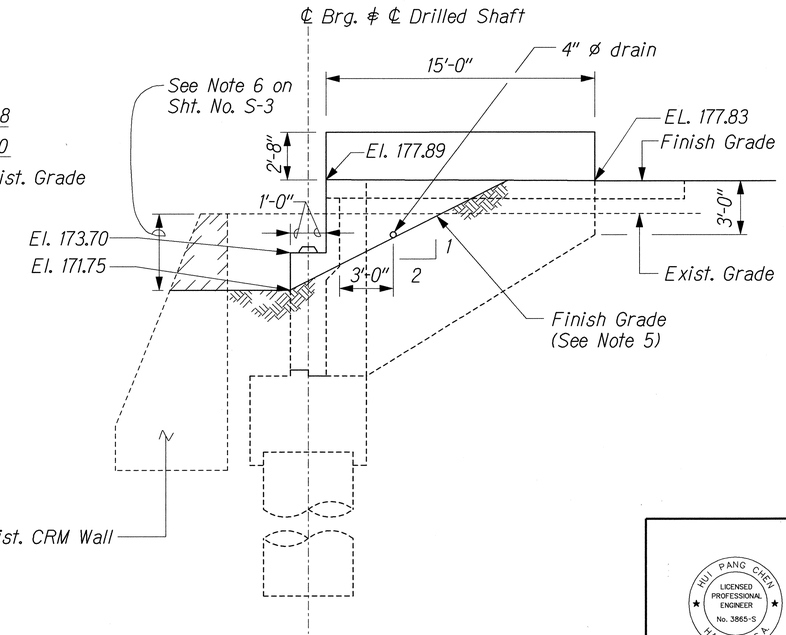

WINGWALL NO. 4

ORIGINAL PLAN | SURVEY PLOTTED BY | DRAWN BY | TRACED BY | DESIGNED BY | QUANTITIES BY | CHECKED BY | DATE
NOTE BOOK No.
h:/KUIHELANI/STRUCT/ST-DET9A.dgn

HUI PANG CHEN
LICENSED PROFESSIONAL ENGINEER
No. 3865-S
HAWAII, U.S.A.

THIS WORK WAS PREPARED BY ME OR UNDER MY SUPERVISION.

Huipang Chen

STATE OF HAWAII
DEPARTMENT OF TRANSPORTATION
HIGHWAYS DIVISION

PALEAAHU STREAM BRIDGE
ABUTMENT SHEET 2 OF 4
KUIHELANI HIGHWAY WIDENING
HONOAPIILANI HIGHWAY TO PUUNENE AVENUE
FEDERAL-AID PROJECT NO. NH-0380(9)

Scale: 1/4" = 1'-0" Date: Sept. 14, 2001

SHEET No. S-6 OF 54 SHEETS

FED. ROAD DIST. NO.	STATE	FED. AID PROJ. NO.	FISCAL YEAR	SHEET NO.	TOTAL SHEETS
HAWAII	HAW.	NH-0380(9)	2000	169	380

NOTE:

1. For Concrete Railing Details, See Sht. No. S-32.
2. For Approach Slab Details, See Sht. No. S-35.
3. For Deck Expansion Jt., See Sht. No. S-35.

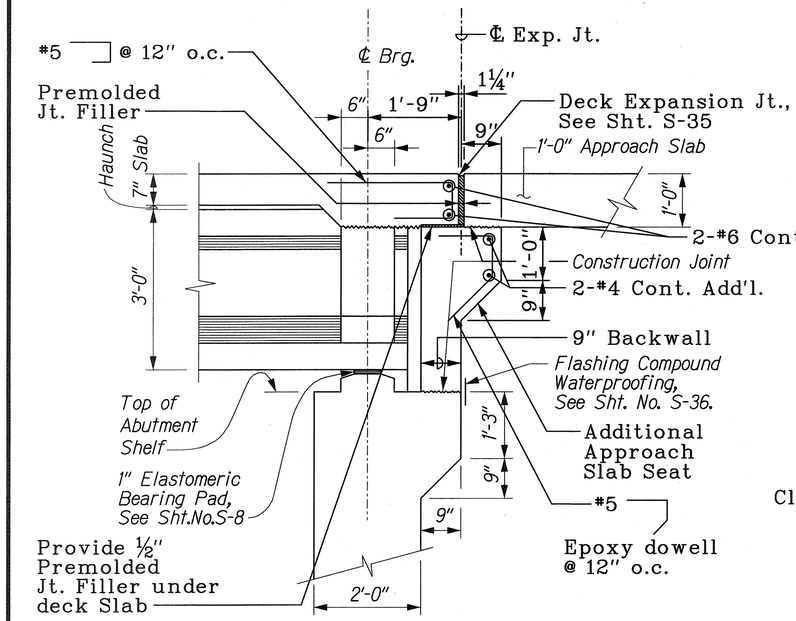

ABUTMENT SEAT DETAIL

Scale: ¾" = 1'-0"

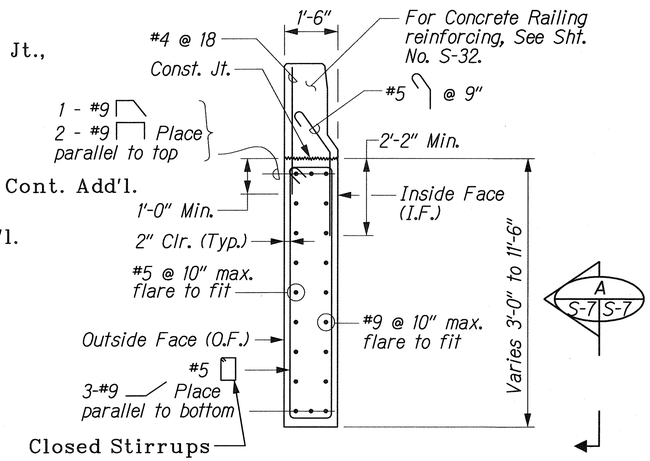

TYPICAL SECTION OF WINGWALL

Scale: ½" = 1'-0"

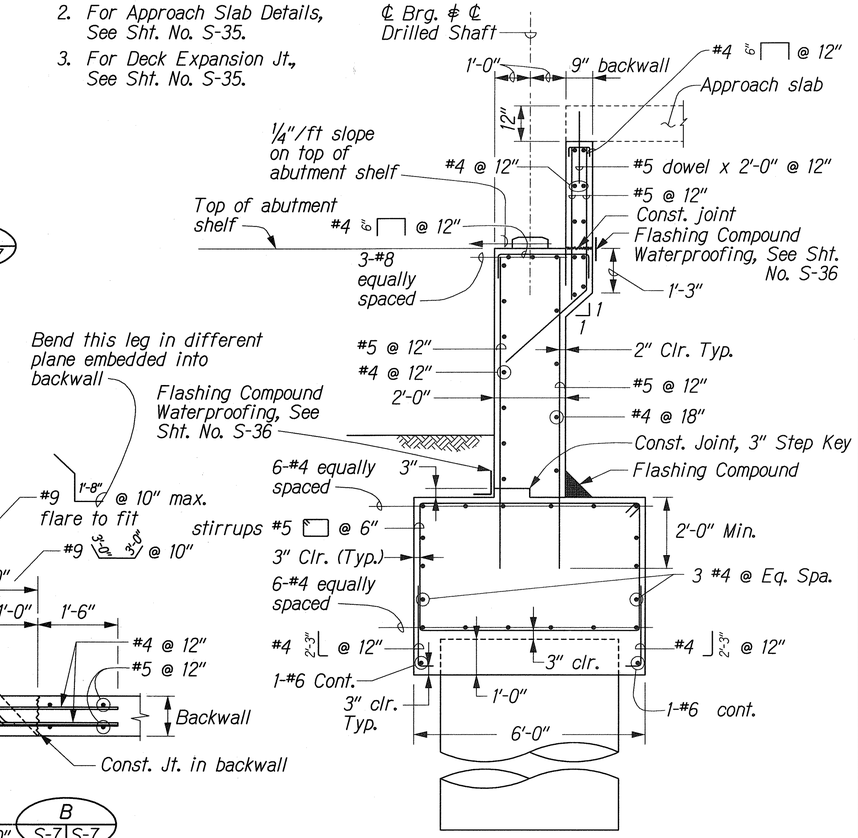

TYPICAL ABUTMENT SECTION

Scale: ½" = 1'-0"

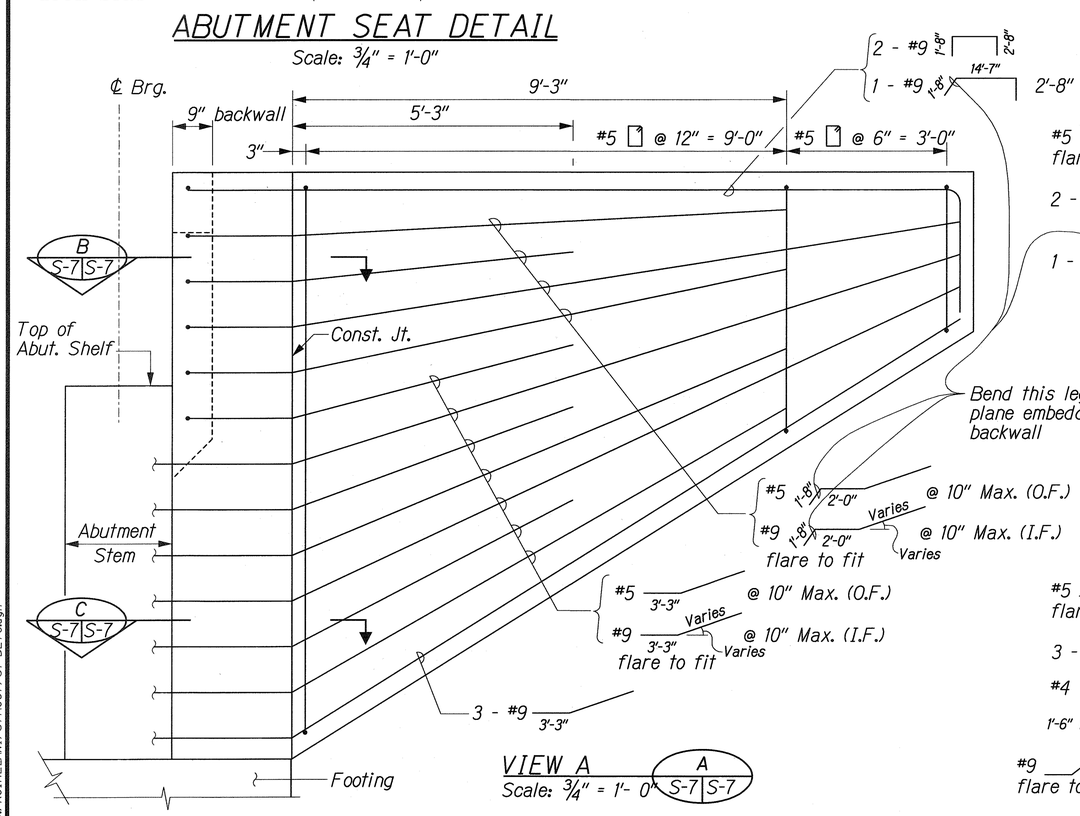

VIEW A

Scale: ¾" = 1'- 0" A S-7 S-7

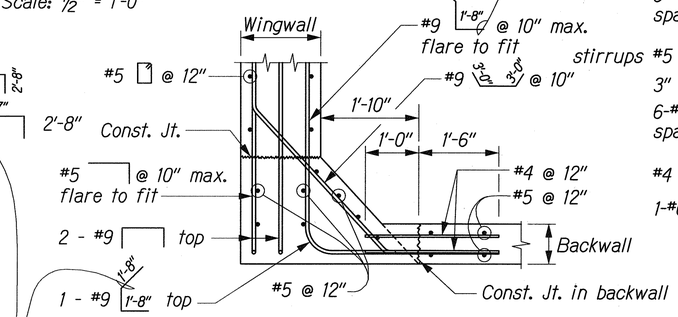

VIEW B

Scale: ¾" = 1'- 0" B S-7 S-7

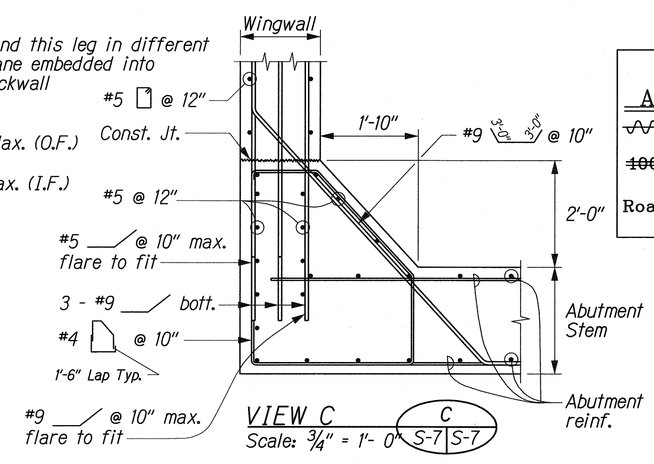

VIEW C

Scale: ¾" = 1'- 0" C S-7 S-7

LEGEND FOR AS-BUILT POSTINGS

~~	Squiggly line for as-built deletion
~~100.00~~	Double line for as-built deletion
Roadway	Text for as-built posting

HU PANG CHEN LICENSED PROFESSIONAL ENGINEER No. 3865-S HAWAII, U.S.A.

THIS WORK WAS PREPARED BY ME OR UNDER MY SUPERVISION.

STATE OF HAWAII
DEPARTMENT OF TRANSPORTATION
HIGHWAYS DIVISION

PALEAAHU STREAM BRIDGE
ABUTMENT SHEET 3 OF 4
KUIHELANI HIGHWAY WIDENING
HONOAPIILANI HIGHWAY TO PUUNENE AVENUE
FEDERAL-AID PROJECT NO. NH-0380(9)

Scale: As Shown Date: Sept. 14, 2001

SHEET No. S-7 OF 54 SHEETS

ORIGINAL PLAN | SURVEY PLOTTED BY | DRAWN BY | TRACED BY | DESIGNED BY | QUANTITIES BY | CHECKED BY | DATE | NOTE BOOK | No.

Jz/KUIHELANI/STRUCT/ST-DET8.dgn

FED. ROAD DIST. NO.	STATE	FED. AID PROJ. NO.	FISCAL YEAR	SHEET NO.	TOTAL SHEETS
HAWAII	HAW.	NH-0380(9)	2000	170	380

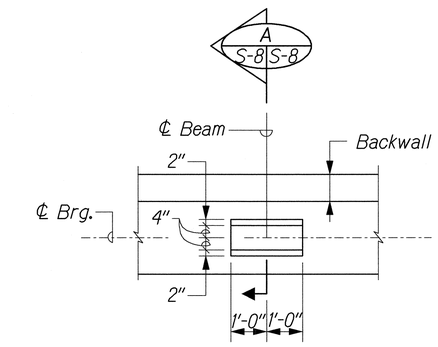

PLAN

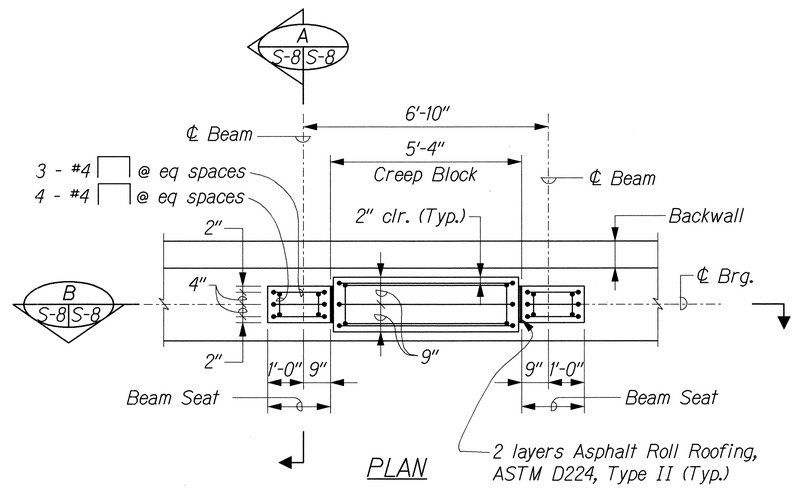

PLAN

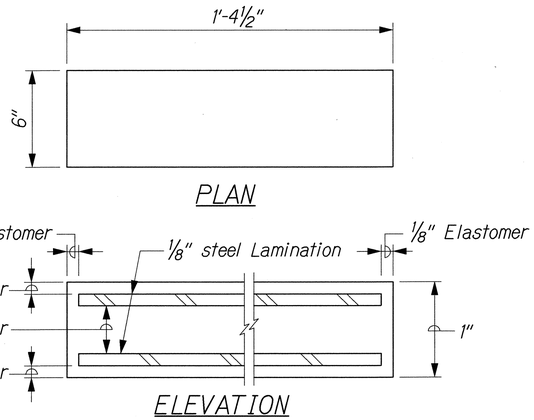

ELASTOMERIC PAD DETAIL

Scale: Not to Scale

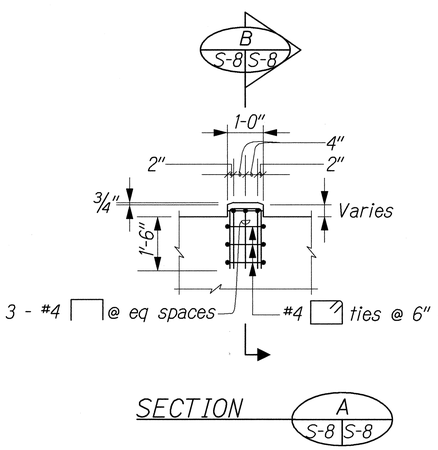

BEAM SEAT

Scale: ½" = 1'- 0"

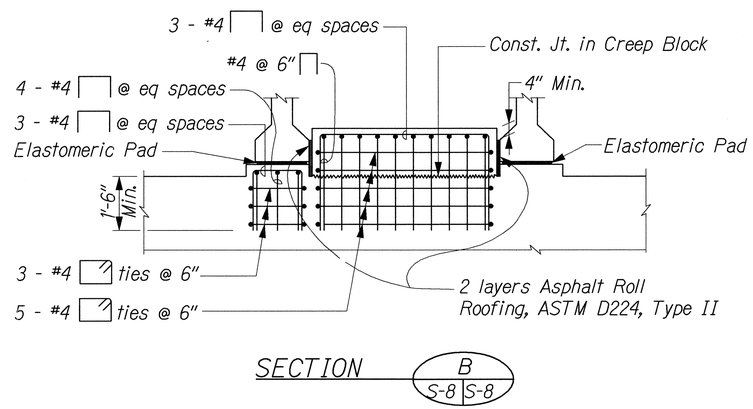

BEAM SEAT AND CREEP BLOCK

Scale: ½" = 1'- 0"

ORIGINAL PLAN	SURVEY PLOTTED BY	DATE
	DRAWN BY	
	TRACED BY	
NOTE BOOK	DESIGNED BY	
	QUANTITIES BY	
N.	CHECKED BY	

J:/KUIHELANI/STRUCT/ST-DET20.dgn

HUI PANG CHEN
LICENSED PROFESSIONAL ENGINEER
No. 3865-S
HAWAII, U.S.A.

THIS WORK WAS PREPARED BY ME OR UNDER MY SUPERVISION.

Hui Pang Chen

STATE OF HAWAII
DEPARTMENT OF TRANSPORTATION
HIGHWAYS DIVISION

PALEAAHU STREAM BRIDGE
ABUTMENT SHEET 4 OF 4
KUIHELANI HIGHWAY WIDENING
HONOAPIILANI HIGHWAY TO PUUNENE AVENUE
FEDERAL-AID PROJECT NO. NH-0380(9)

Scale: As Shown Date: Sept. 14, 2001

SHEET No. S-8 OF 54 SHEETS

FED. ROAD DIST. NO.	STATE	FED. AID PROJ. NO.	FISCAL YEAR	SHEET NO.	TOTAL SHEETS
HAWAII	HAW.	NH-0380(9)	2000	171	380

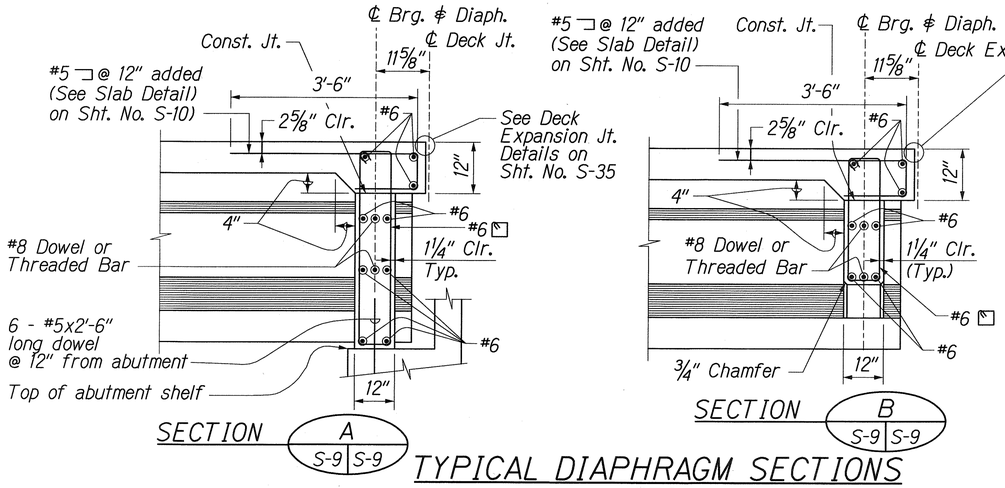

TYPICAL DIAPHRAGM SECTIONS

N.T.S.

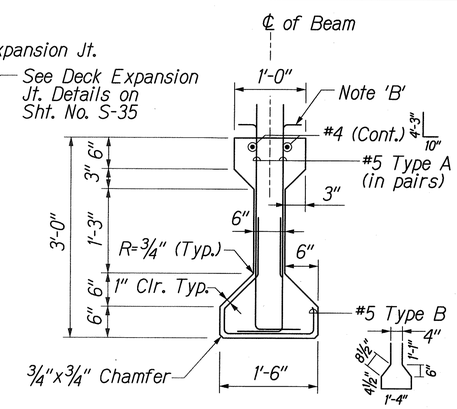

AASHTO TYPE II TYPICAL BEAM SECTION

N.T.S.

PRESTRESSED BEAM NOTES:

1. Concrete strength for precast/prestressed concrete beam shall be 6000 psi at 28 days.
2. Minimum compressive strength of concrete at transfer, See Table this sheet.
3. Prestressing strands shall be ½" diameter, 270 ksi, low-relax strands conforming to ASTM A 416. The estimated total losses due to creep, shrinkage, elastic shortening, and relaxation of steel are 53,000 psi.
4. Non-prestressed reinforcing steel in prestressed beam shall be Grade 60 unless otherwise noted. For properties, see State Standard Specifications.
5. The calculated camber includes the effect of the initial prestress force and the weight of the beam after removal from the bed. ~~Positive~~ Negative values shown for calculated camber indicate a net upward deflection. The calculated camber value has been multiplied by a factor of 2 to approximate the effect of camber growth and concrete creep. The actual camber shall not exceed the calculated camber by more than ½".
6. The dead load deflection includes the combined effects of the weight of beam, slab, haunch, diaphragm, and concrete railing.
7. Strand release sequence shall not induce any lateral deflection of the beam. For Strand release procedures, see Special Provisions.
8. The Contractor shall submit his proposed strand releasing sequence to the Engineer for acceptance.
9. During curing, care shall be taken to avoid any lateral deflection of the beam due to improper orientation.
10. Lifting devices shall be placed as close as possible to the centerline of bearings of the beam. Details and locations of lifting devices shall be submitted to the Engineer for acceptance. Such acceptance does not relieve the Contractor of his responsibilities if beam is damaged due to the failure of the lifting device.

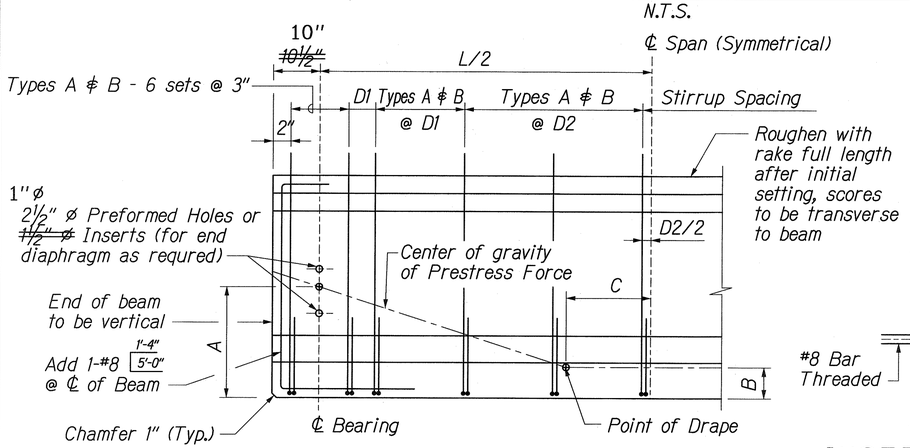

LONGITUDINAL SECTION

N.T.S.

NOTE 'A':

For low relaxation strands, the stress immediately prior to transfer shall not exceed 0.75 fs', where fs' is the ultimate tensile strength of prestressing steel.

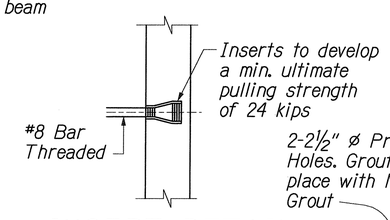

INSERT DETAIL

N.T.S.

NOTE 'B':

Bend bars in field 2" below top of deck. All reinforcing dimensions are out to out.

NOTE 'C':

Provide styrofoam to protect elastomeric pads from concrete encroachment prior to placing the end diaphragm at the hinge bearing.

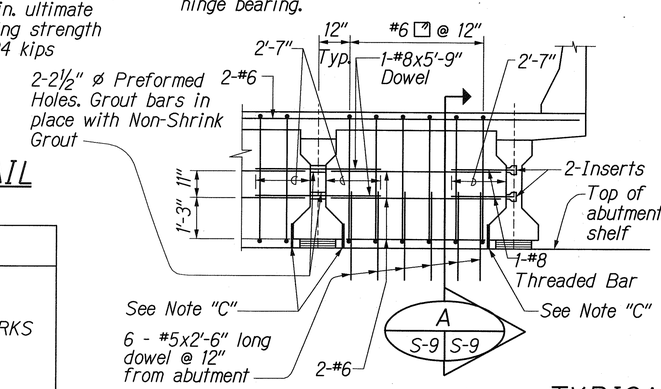

AT HINGE BEARING

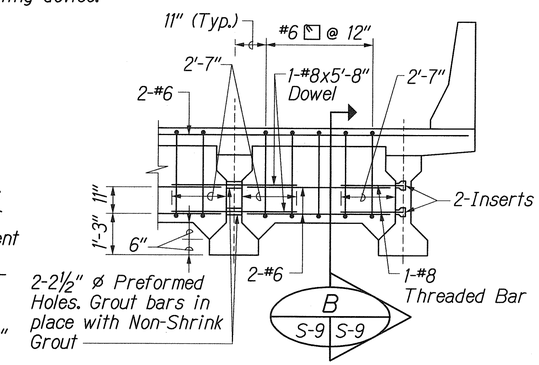

AT EXPANSION BEARING

TYPICAL END DIAPHRAGM DETAILS

N.T.S.

BEAM SCHEDULE

BEAM TYPE	INITIAL PRESTRESS FORCE (KIPS) (BEFORE ANY LOSS)	FINAL PRESTRESS FORCE (KIPS) (AFTER ALL LOSSES)	CALCULATED CAMBER SEE NOTE 5	DEAD LOAD DEFLECTION SEE NOTE 6	LOCATION OF CENTER OF GRAVITY OF PRESTRESSED FORCE			STIRRUPS		REQUIRED MIN. ULT. CONC. STRENGTH BEFORE RELEASE OF STRANDS (PSI)	REMARKS
					DIST A	DIST B	DIST. TO PT. OF DRAPE C	NO. OF STIRRUPS @ SPACING D1	NO. OF STIRRUPS @ SPACING D2		
II	619.65	457.30	-0.700"	0.432"	11.6"	7.2"	4.5'	11 @ 12"	Balance @ 18"	4500	

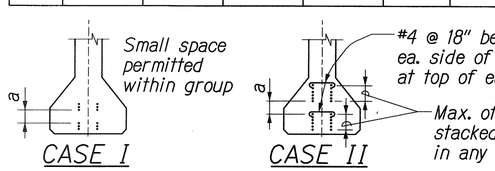

BUNDLING OF PRESTRESSED REINFORCEMENT

ARRANGEMENT AND CLEARANCE FOR PRETENSIONED STRANDS

1. Strands may be bundled in groups as shown.
2. The min. distance "a" between groups or individual strands is 2" for ½" ø Strands.
3. "a" is measured between centers of adjacent strands.

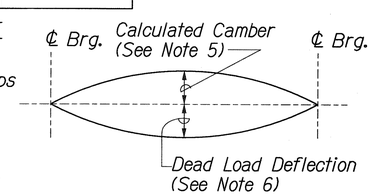

CAMBER DIAGRAM

LEGEND FOR AS-BUILT POSTINGS

~~	Squiggly line for as-built deletion
~~100.00~~	Double line for as-built deletion
Roadway	Text for as-built posting

HUI PANG CHEN
LICENSED PROFESSIONAL ENGINEER
No. 3865-S
HAWAII, U.S.A.

THIS WORK WAS PREPARED BY ME OR UNDER MY SUPERVISION.

STATE OF HAWAII
DEPARTMENT OF TRANSPORTATION
HIGHWAYS DIVISION

PALEAAHU STREAM BRIDGE
PRESTRESSED BEAM DETAILS
KUIHELANI HIGHWAY WIDENING
HONOAPIILANI HIGHWAY TO PUUNENE AVENUE
FEDERAL-AID PROJECT NO. NH-0380(9)

Scale: Not to Scale Date: Sept. 14, 2001

SHEET No. S-9 OF 54 SHEETS

ORIGINAL PLAN — SURVEY PLOTTED BY ___ DRAWN BY ___ TRACED BY ___ DESIGNED BY ___ QUANTITIES BY ___ CHECKED BY ___ DATE ___ NOTE BOOK ___ No. ___

J:/KUIHELANI/STRUCT/BR-DET05.dgn

"AS-BUILT"

FED. ROAD DIST. NO.	STATE	FED. AID PROJ. NO.	FISCAL YEAR	SHEET NO.	TOTAL SHEETS
HAWAII	HAW.	NH-0380(9)	2000	172	380

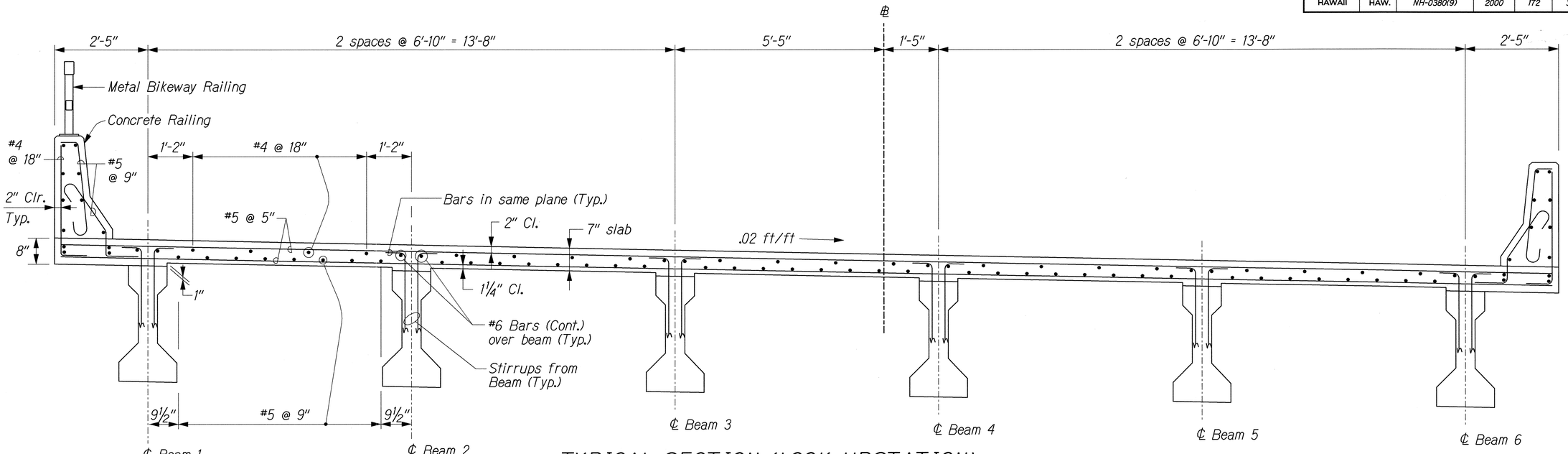

TYPICAL SECTION (LOOK UPSTATION)

Scale: ¾" = 1'-0"

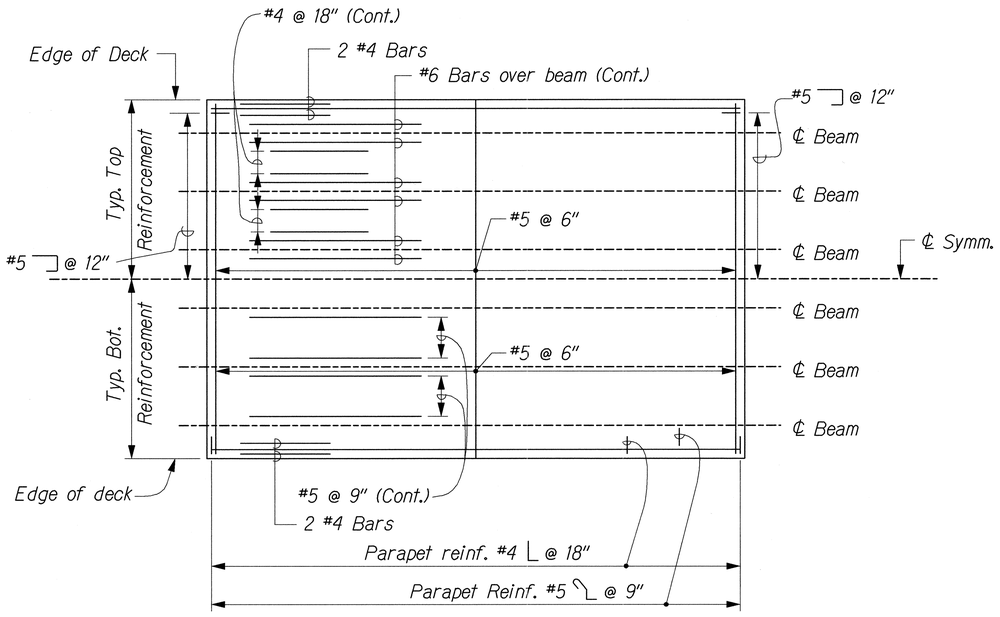

TYPICAL DECK REINF. PLAN

Not to Scale

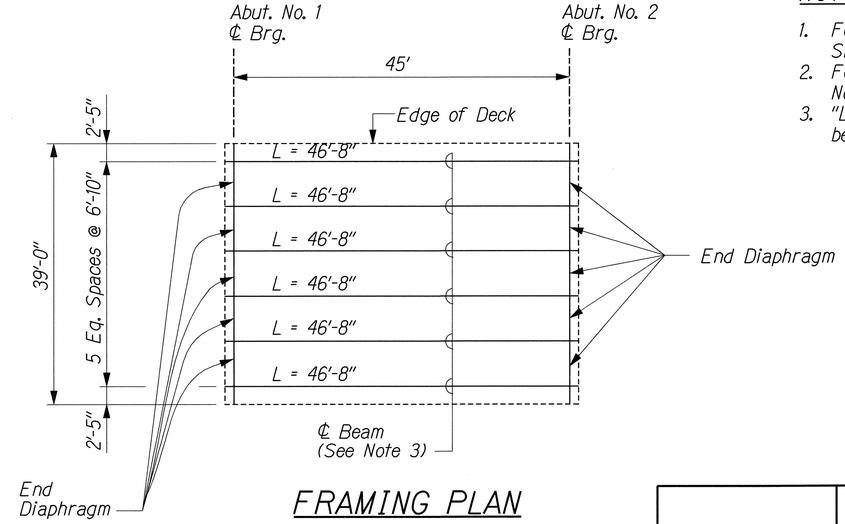

FRAMING PLAN

Not to Scale

NOTES:

1. For Concrete Railing Details, see Sheet No. S-32.
2. For Metal Bikeway Railing, see Sheet No. S-34.
3. "L" denotes the total length of beam along Level line.

ORIGINAL PLAN	SURVEY PLOTTED BY	DATE
	DRAWN BY	
	TRACED BY	
NOTE BOOK	DESIGNED BY	
	QUANTITIES BY	
No.	CHECKED BY	

J:/KUIHELANI/STRUCT/ST-DET16.dgn

HUI PANG CHEN
LICENSED PROFESSIONAL ENGINEER
No. 3865-S
HAWAII, U.S.A.

THIS WORK WAS PREPARED BY ME OR UNDER MY SUPERVISION.

Huipang Chen

STATE OF HAWAII
DEPARTMENT OF TRANSPORTATION
HIGHWAYS DIVISION

PALEAAHU STREAM BRIDGE
DECK REINF. & FRAMING PLAN
KUIHELANI HIGHWAY WIDENING
HONOAPIILANI HIGHWAY TO PUUNENE AVENUE
FEDERAL-AID PROJECT NO. NH-0380(9)

Scale: As Shown Date: Sept. 14, 2001

SHEET No. S-10 OF 54 SHEETS

FED. ROAD DIST. NO.	STATE	FED. AID PROJ. NO.	FISCAL YEAR	SHEET NO.	TOTAL SHEETS
HAWAII	HAW.	NH-0380(9)	2000	173	380

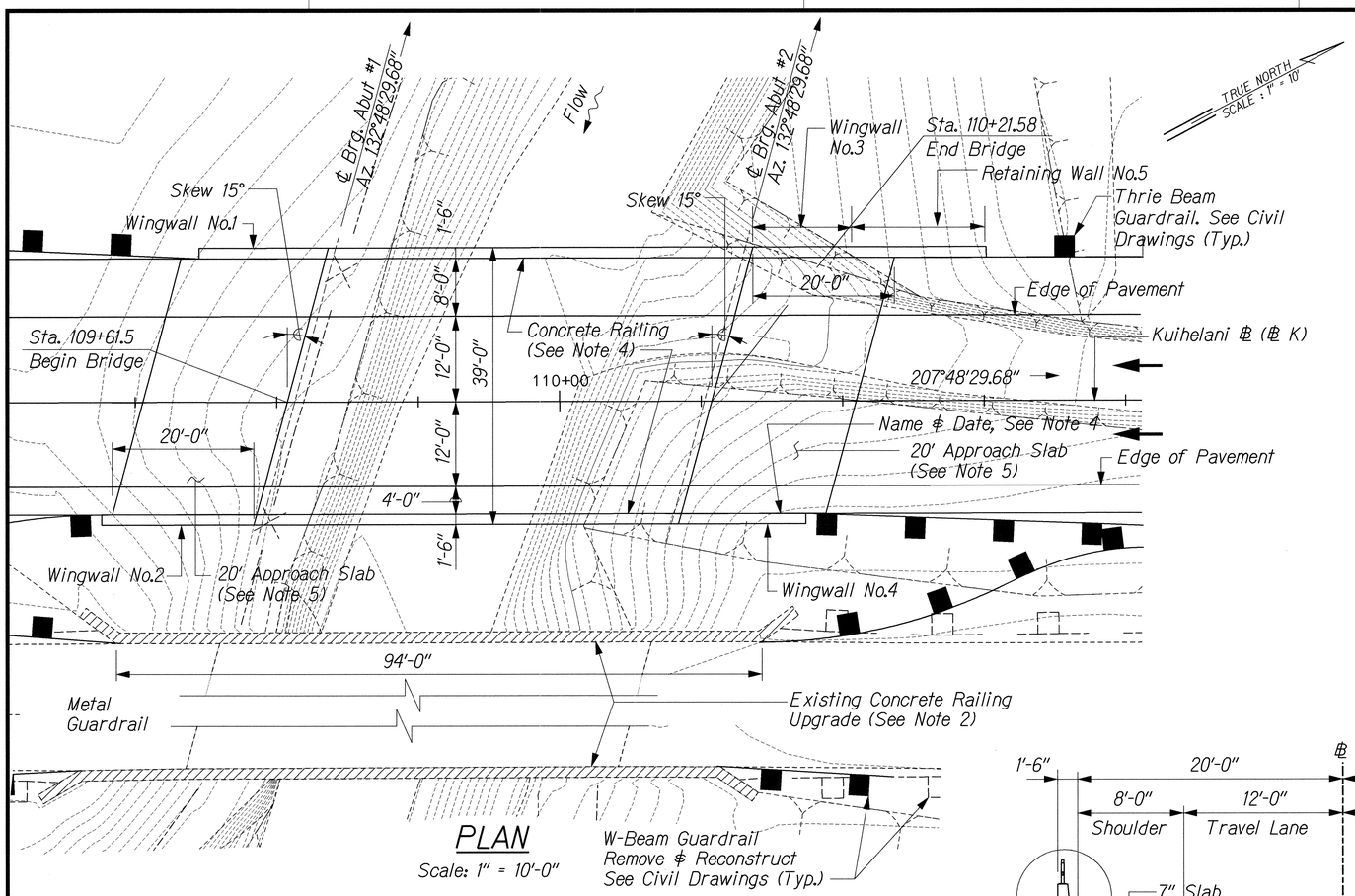

PLAN

Scale: 1" = 10'-0"

ESTIMATED QUANTITIES

ITEM NO.	ITEM	UNIT	QUANTITIES
206.	Structure Excavation For Abutments & Walls	CY	765
206.	Structure Backfill For Abutments & Walls	CY	448
646.	Geocomposite Drain For Abutments & Walls	SY	192
503.	Concrete In Bridge (Except Footing)	LS	(221 CY)
503.	Concrete In Bridge Footing	LS	(180 CY)
503.	Concrete In Approach Slab	LS	(54 CY)
504.	AASHTO Type III Prestressed Concrete Beam	LF	359
507.	Concrete Railing (Include End Post)	LF	211
507.	Metal Bikeway Railing	LF	206
507.	Upgrade of Existing Concrete Railing	LF	188
511.	Drilled Shafts	LF	588
511.	Load Test For Drilled Shafts	EA	1
602.	Reinforcing Steel For Bridge	LS	(80,280 Lbs)

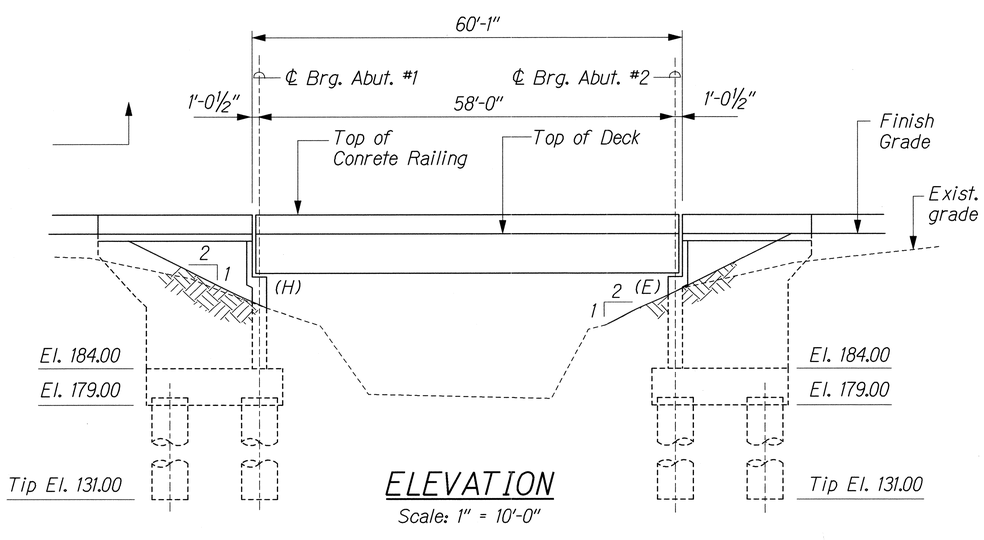

ELEVATION

Scale: 1" = 10'-0"

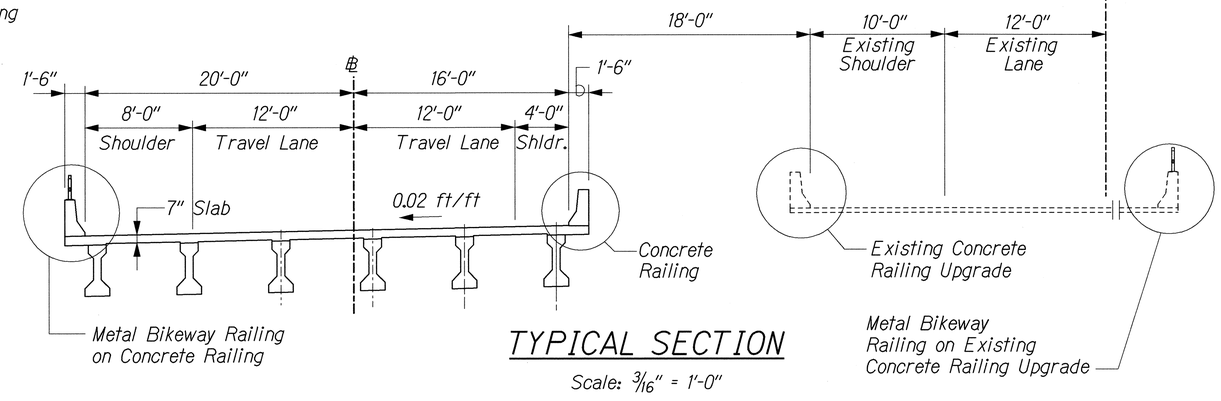

TYPICAL SECTION

Scale: 3/16" = 1'-0"

NOTES:

1. For General Notes, See Sht. No. S-2 .
2. For Existing Concrete Railing Upgrade Details, See Sht. No. S-33
3. For Drilled Shaft details and Cut Off Elevation, See Sht. No. S-31
4. For Bridge Name & Date location, Concrete Railing Details, See Sht. No. S-32
5. For Approach Slab Details, See Sht. No. S-35
6. For Metal Bikeway Railing Details, See Sht. No. S-34
7. For Payment Limit, See Sht. No. S-30

ORIGINAL PLAN	SURVEY PLOTTED BY	DATE
	DRAWN BY	
	TRACED BY	
NOTE BOOK	DESIGNED BY	
	QUANTITIES BY	
No.	CHECKED BY	

J:/KUIHELANI/STRUCT/BR-03.dgn

HUI PANG CHEN
LICENSED PROFESSIONAL ENGINEER
No. 3865-S
HAWAII, U.S.A.

THIS WORK WAS PREPARED BY ME OR UNDER MY SUPERVISION.

Huipang Chen

STATE OF HAWAII
DEPARTMENT OF TRANSPORTATION
HIGHWAYS DIVISION

WAIKAPU STREAM BRIDGE

PLAN, ELEVATION & SECTION

KUIHELANI HIGHWAY WIDENING

HONOAPIILANI HIGHWAY TO PUUNENE AVENUE

FEDERAL-AID PROJECT NO. NH-0380(9)

Scale: As Shown Date: Sept. 14, 2001

SHEET No. S-11 OF 54 SHEETS

FED. ROAD DIST. NO.	STATE	FED. AID PROJ. NO.	FISCAL YEAR	SHEET NO.	TOTAL SHEETS
HAWAII	HAW.	NH-0380(9)	2000	C.O. 174	380

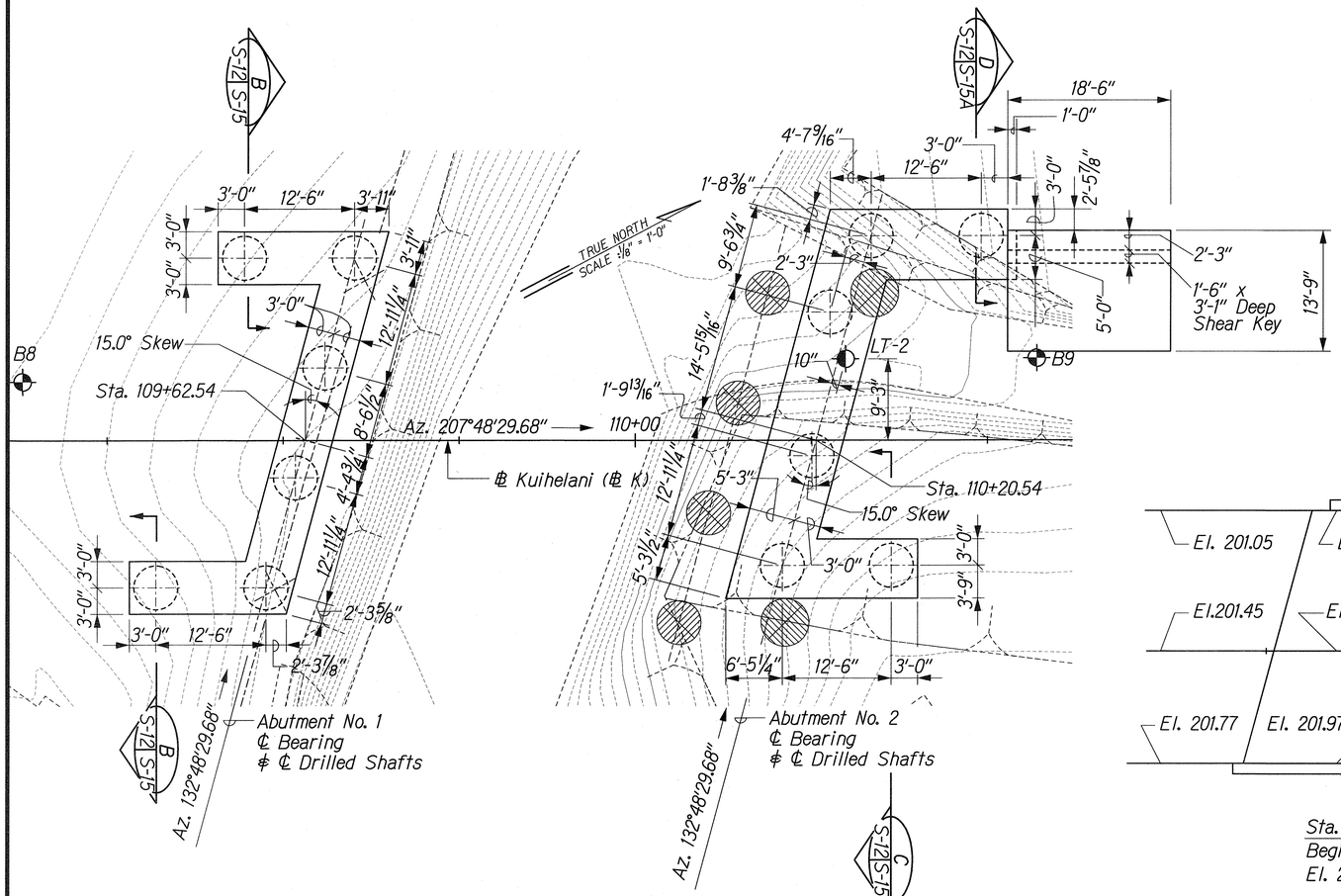

ABUTMENT NO. 1 & NO. 2 FOUNDATION PLAN

Scale: ⅛" = 1'-0"

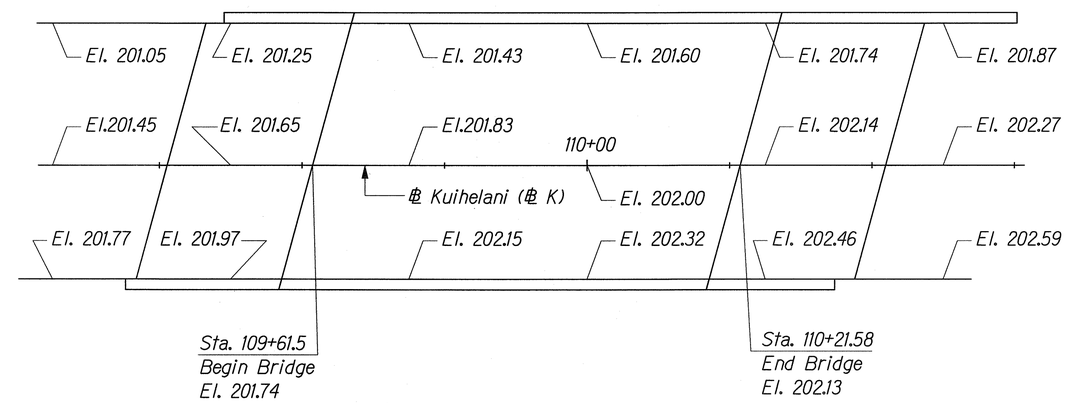

FINISH SPOT ELEVATIONS (@ 25'-0" Interval)

Scale: 1" = 10'-0"

LEGEND:

B8
Denotes Locations of Borings

LT-2
Denotes Location of Trial and Load Test Shaft

Denotes existing shaft to be removed. See Note 4.

NOTES:

1. For Boring Logs, See Sht. Nos. B1 to B12.
2. For Drilled Shaft Tip Elevations, See Sht. No. S-11.
3. For Drilled Shaft Details and Drilled Shaft Cutoff Elevations, See Sht. No. S-31.
4. Remove the existing shafts, which do not interfere with footings, to 2'-0" below existing ground. Remove the existing shafts, which interfere with footing, to 2'-0" below bottom of footing.

Date	Revision
6/27/02	Revised Abutment #2 shaft locations and footing size.
5/15/02	Revised Abutment #2 shaft locations and footing size. Added Note No. 4 and legend for existing shaft.

HU PANG CHEN
LICENSED PROFESSIONAL ENGINEER
No. 3865-S
HAWAII, U.S.A.

THIS WORK WAS PREPARED BY ME OR UNDER MY SUPERVISION.

Hupang Chen

STATE OF HAWAII
DEPARTMENT OF TRANSPORTATION
HIGHWAYS DIVISION

WAIKAPU STREAM BRIDGE
FOUNDATION PLAN & SPOT ELEVS.
KUIHELANI HIGHWAY WIDENING
HONOAPIILANI HIGHWAY TO PUUNENE AVENUE
FEDERAL-AID PROJECT NO. NH-0380(9)

Scale: As Shown Date: Sept. 14, 2001

SHEET No. S-12 OF 54 SHEETS

C.O. 174

ORIGINAL PLAN | SURVEY PLOTTED BY | DRAWN BY | TRACED BY | DESIGNED BY | QUANTITIES BY | CHECKED BY | DATE
NOTE BOOK No.

J:/KUIHELANI/STRUCT/ST-DET12.dgn

FED. ROAD DIST. NO.	STATE	FED. AID PROJ. NO.	FISCAL YEAR	SHEET NO.	TOTAL SHEETS
HAWAII	HAW.	NH-0380(9)	2000	175	380

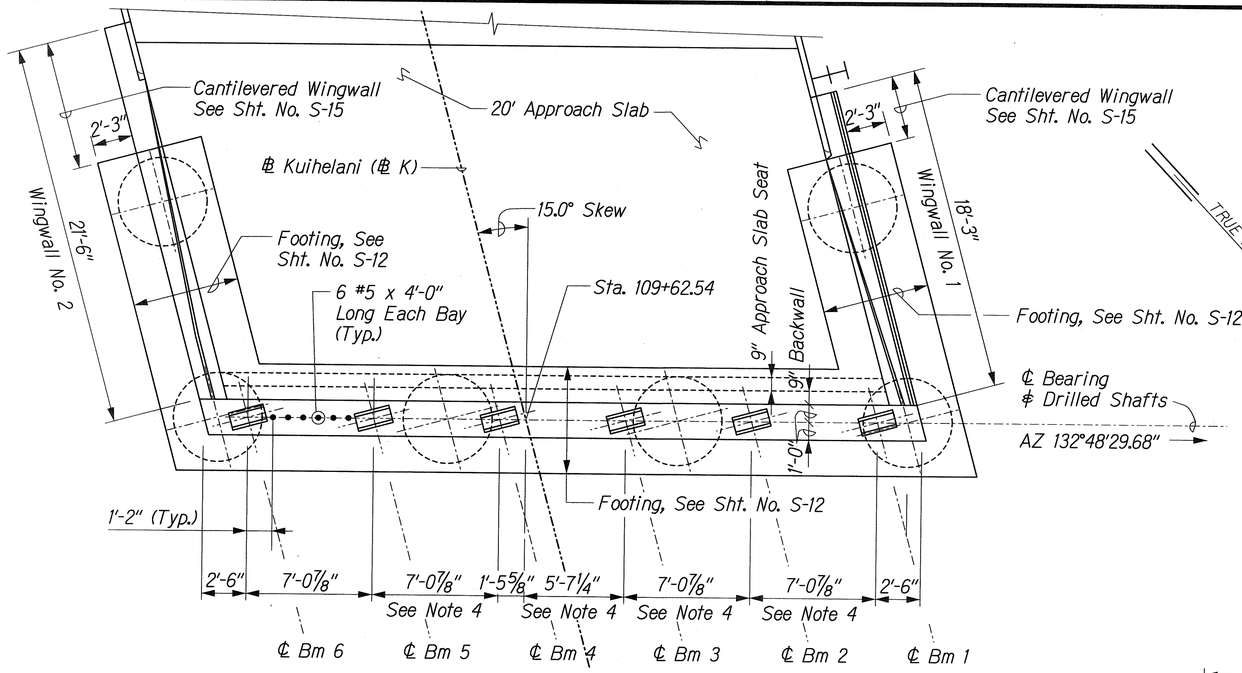

ABUTMENT NO. 1 PLAN

NOTES:

1. For location plan, see Sheet No. S-11.
2. For Approach Slab Details, see Sheet No. S-35.
3. For Beam Seat details, see Sheet No. S-16.
4. The #5 hinge dowels not shown in these bays for clarity.
5. See Note 7(L) on Sht. No. S-2.

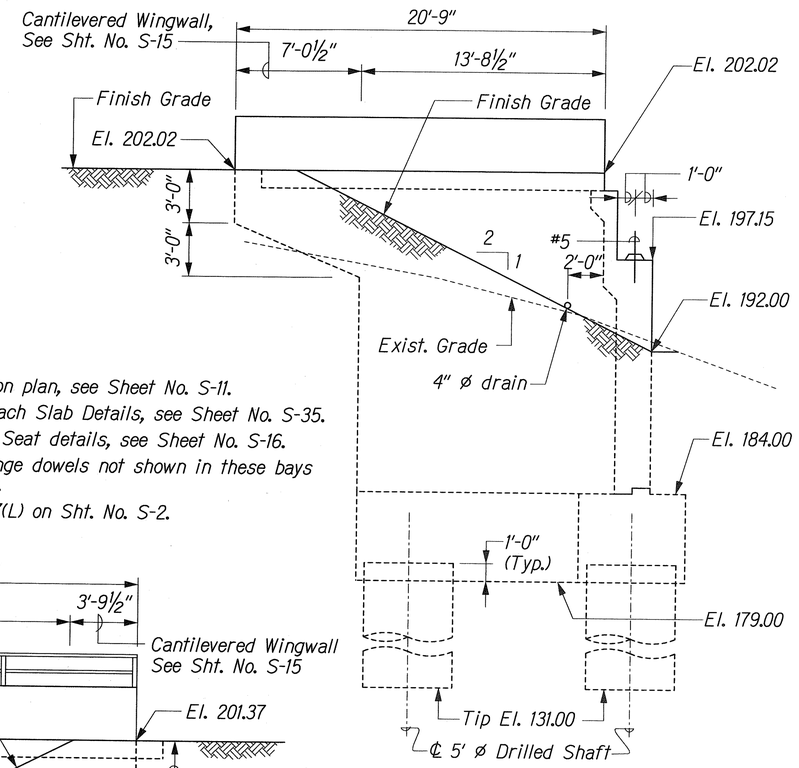

WINGWALL NO. 2 ELEVATION

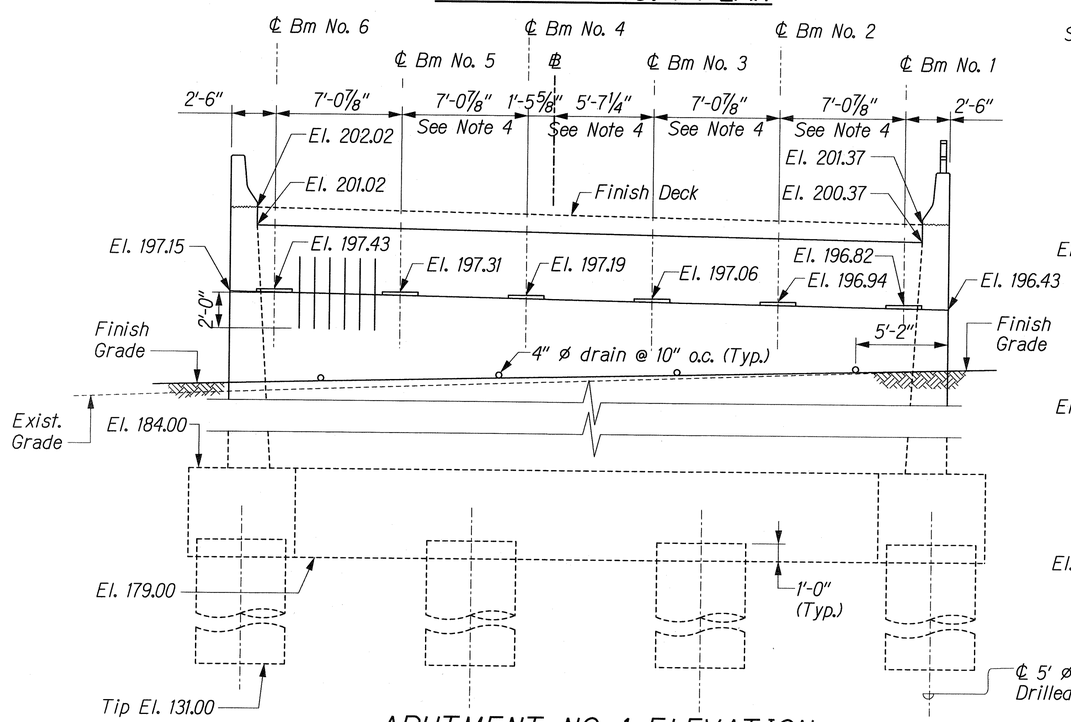

ABUTMENT NO. 1 ELEVATION

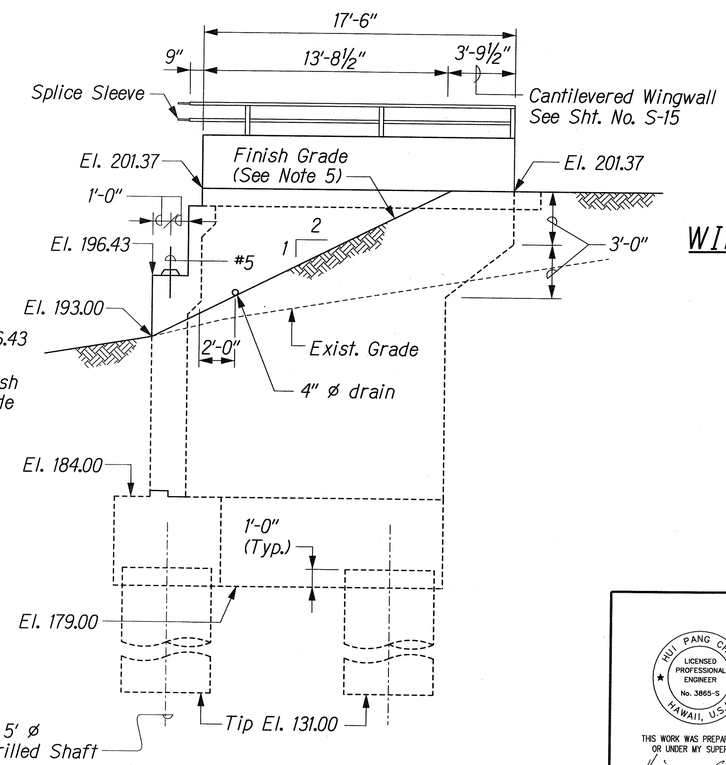

WINGWALL NO. 1 ELEVATION

Date	Revision
6/27/02	Revised wall length in Wingwall No. 1 Elevation and Wingwall No. 2 Elevation.

HUI PANG CHEN
LICENSED PROFESSIONAL ENGINEER
No. 3865-S
HAWAII, U.S.A.

THIS WORK WAS PREPARED BY ME OR UNDER MY SUPERVISION.

STATE OF HAWAII
DEPARTMENT OF TRANSPORTATION
HIGHWAYS DIVISION

WAIKAPU STREAM BRIDGE

ABUTMENT SHEET 1 OF 4

KUIHELANI HIGHWAY WIDENING
HONOAPIILANI HIGHWAY TO PUUNENE AVENUE
FEDERAL-AID PROJECT NO. NH-0380(9)

Scale: ¼" = 1'-0" Date: Sept. 14, 2001

SHEET No. S-13 OF 54 SHEETS

ORIGINAL PLAN | SURVEY PLOTTED BY | DRAWN BY | TRACED BY | DESIGNED BY | QUANTITIES BY | CHECKED BY | DATE
NOTE BOOK No.

J:/KUIHELANI/STRUCT/ST-DETIl.dgn

C.O. 175

FED. ROAD DIST. NO.	STATE	FED. AID PROJ. NO.	FISCAL YEAR	SHEET NO.	TOTAL SHEETS
HAWAII	HAW.	NH-0380(9)	2000	C.O. 176	380

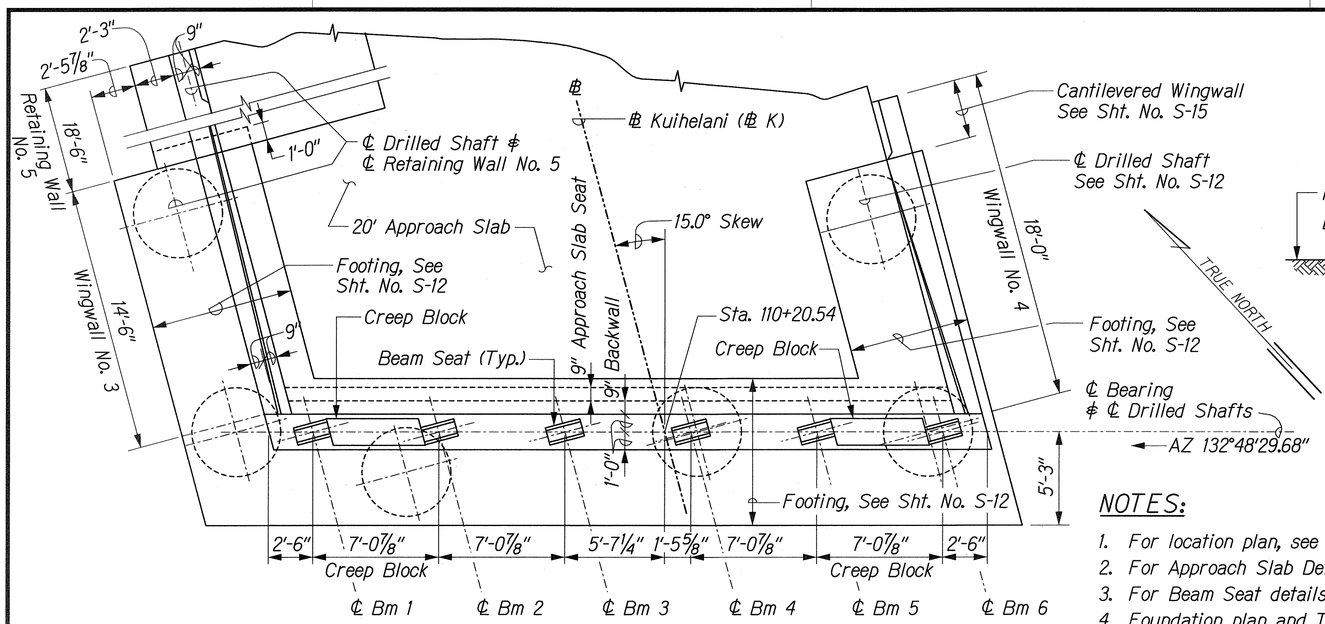

ABUTMENT NO. 2 PLAN

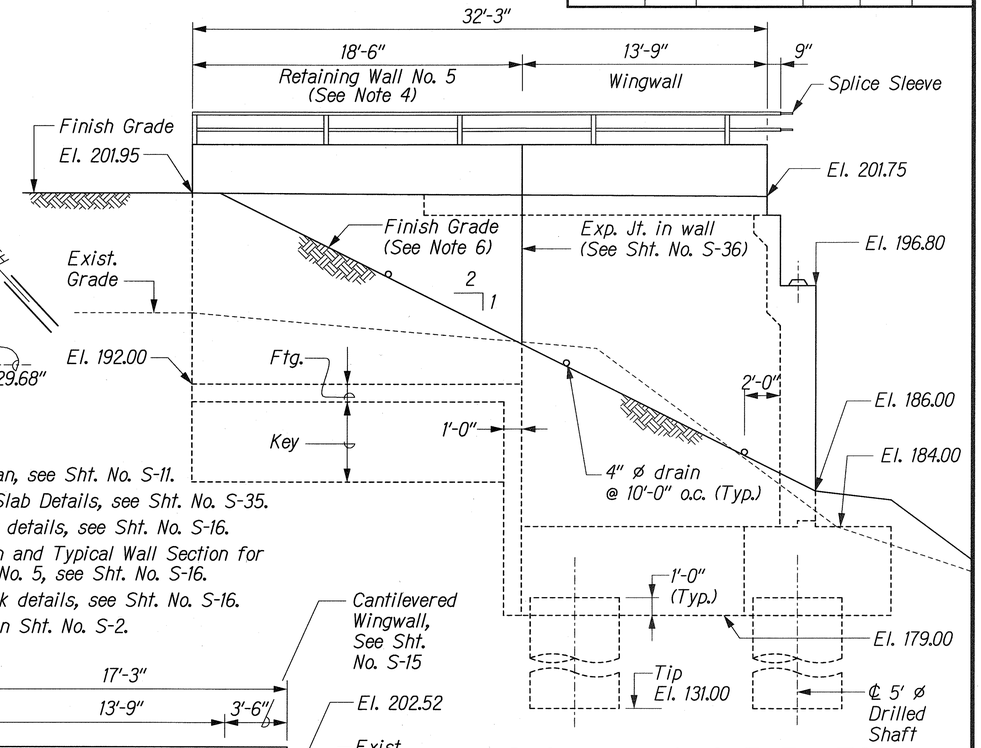

WINGWALL NO. 3 ELEVATION

NOTES:

1. For location plan, see Sht. No. S-11.
2. For Approach Slab Details, see Sht. No. S-35.
3. For Beam Seat details, see Sht. No. S-16.
4. Foundation plan and Typical Wall Section for Retaining Wall No. 5, see Sht. No. S-16.
5. For Creep Block details, see Sht. No. S-16.
6. See Note 7(L) on Sht. No. S-2.

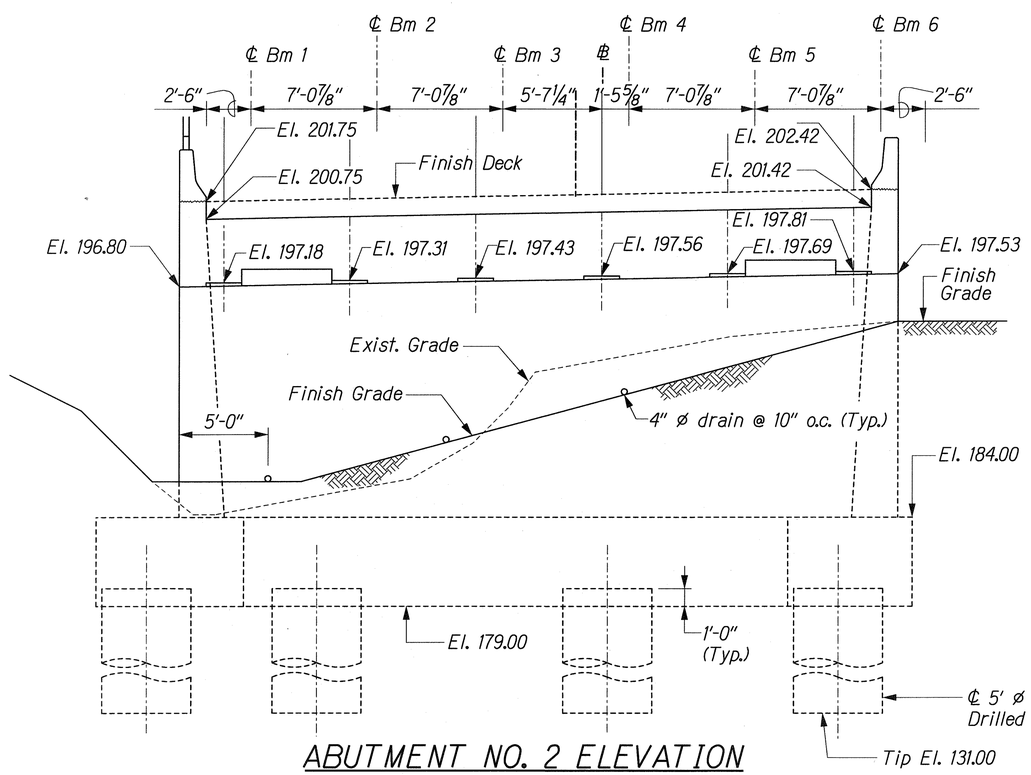

ABUTMENT NO. 2 ELEVATION

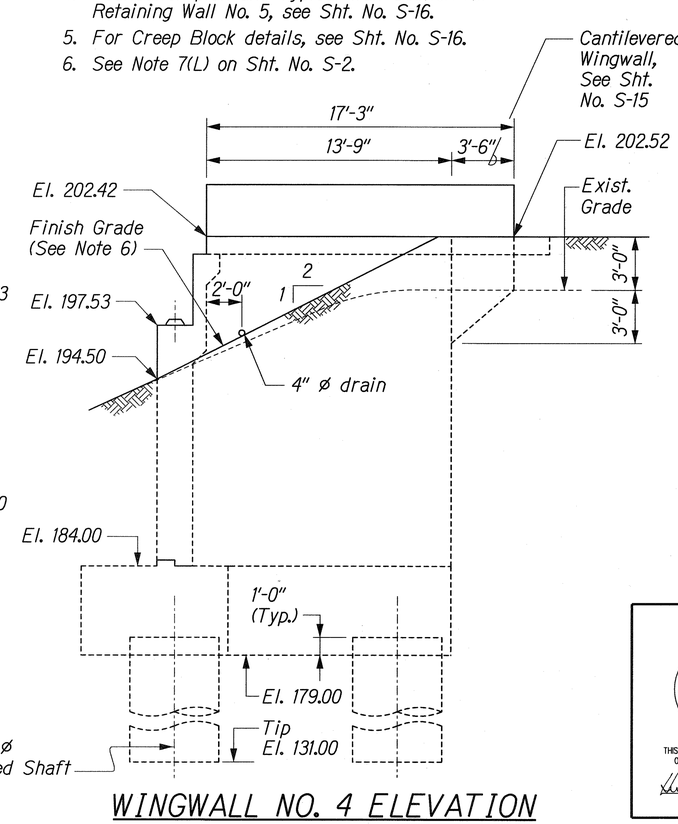

WINGWALL NO. 4 ELEVATION

Date	Revision
6/27/02	Revised shaft locations, wall length and Ftg. size in Abutment No. 2 Plan View, Wingwall No. 3 Elevation and Wingwall No. 4 Elevation.
5/15/02	Revised shaft locations and ℄ Bridge Stationing of Abutment # 2, Plan View and Elevation View.

HU PANG CHEN
LICENSED PROFESSIONAL ENGINEER
No. 3865-S
HAWAII, U.S.A.

THIS WORK WAS PREPARED BY ME OR UNDER MY SUPERVISION.

STATE OF HAWAII
DEPARTMENT OF TRANSPORTATION
HIGHWAYS DIVISION

WAIKAPU STREAM BRIDGE
ABUTMENT SHEET 2 OF 4
KUIHELANI HIGHWAY WIDENING
HONOAPIILANI HIGHWAY TO PUUNENE AVENUE
FEDERAL-AID PROJECT NO. NH-0380(9)

Scale: 1/4" = 1'-0" Date: Sept. 14, 2001

SHEET No. S-14 OF 54 SHEETS

ORIGINAL PLAN | SURVEY PLOTTED BY | DRAWN BY | TRACED BY | DESIGNED BY | QUANTITIES BY | CHECKED BY | DATE | NOTE BOOK | No.

J:/KUIHELANI/STRUCT/ST-DET10.dgn

C.O. 176

FED. ROAD DIST. NO.	STATE	FED. AID PROJ. NO.	FISCAL YEAR	SHEET NO.	TOTAL SHEETS
HAWAII	HAW.	NH-0380(9)	2000	C.O. 177	380

LEGEND FOR AS-BUILT POSTINGS

~~	Squiggly line for as-built deletion
~~100.00~~	Double line for as-built deletion
Roadway	Text for as-built posting

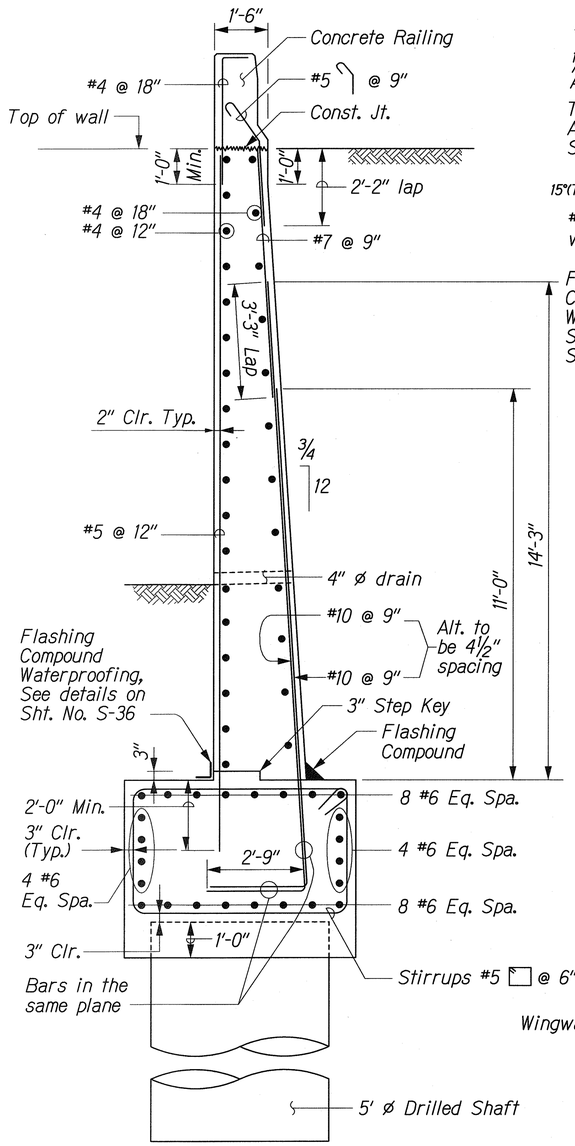

SECTION B S-12 S-15
Scale: ½" = 1'-0"

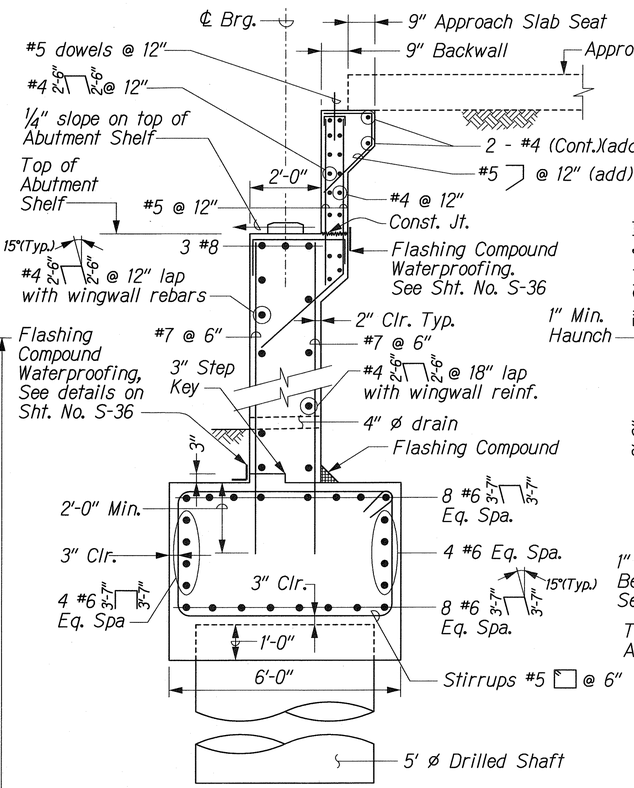

ABUTMENT NO. 1 SECTION
Scale: ½" = 1'-0"

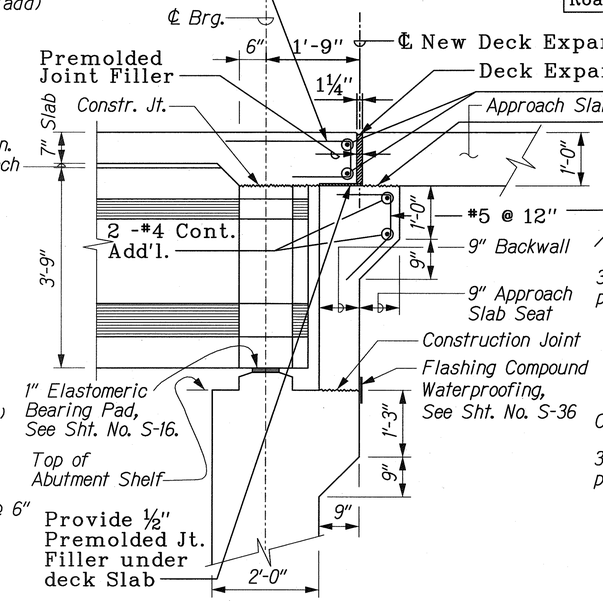

NORMAL SECTION
ABUTMENT SEAT DETAIL
Scale: ¾" = 1'-0"

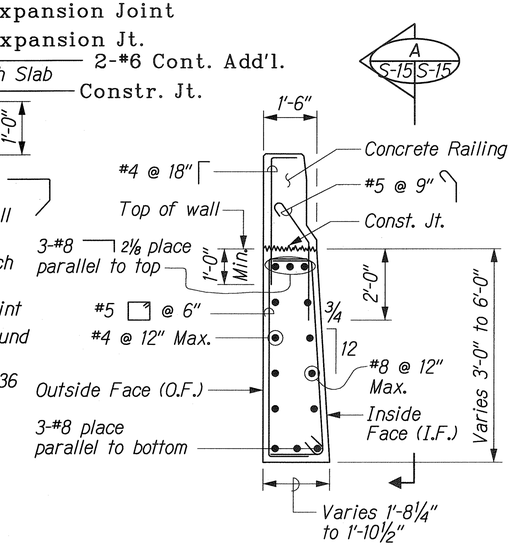

TYPICAL CANTILEVERED
WINGWALL SECTION
Scale: ½" = 1'-0"

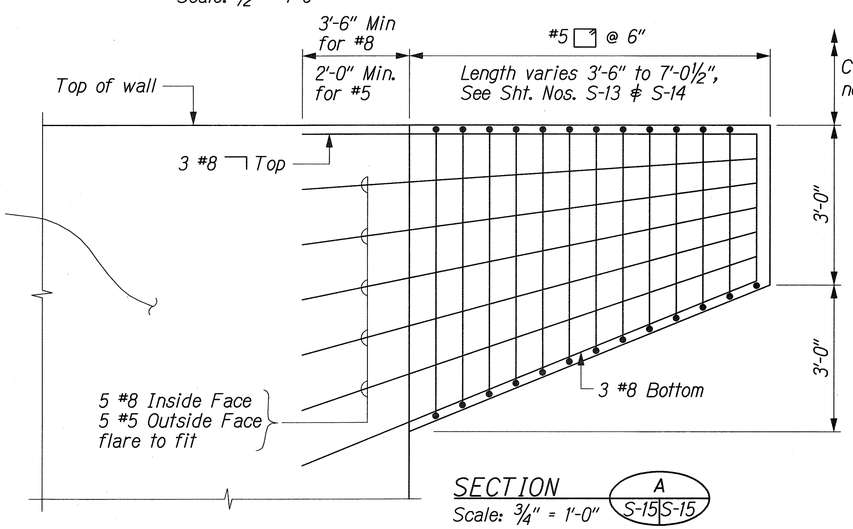

SECTION A S-15 S-15
Scale: ¾" = 1'-0"

NOTES:

1. For Concrete Railing Details, See Sht. No. S-32.
2. For Approach Slab Details, See Sht. No. S-35.
3. For Deck Expansion Jt. Details, See Sht. S-35.

Date	Revision
6/27/02	Revised Title of Typical Abutment Section to Abutment No. 1 Section. Revised Exp. Jt. and back wall detail in Normal Section Abutment Seat Detail and Abutment No. 1 Section.
5/15/02	Revised Title of Typical Wingwall Section to Section B/S-12/S-15. Added rebar clearance in Typical Abutment Section B/S-12/S-15.

HUI PANG CHEN LICENSED PROFESSIONAL ENGINEER No. 3865-S HAWAII, U.S.A.
THIS WORK WAS PREPARED BY ME OR UNDER MY SUPERVISION.
Hui Pang Chen

STATE OF HAWAII
DEPARTMENT OF TRANSPORTATION
HIGHWAYS DIVISION
WAIKAPU STREAM BRIDGE
ABUTMENT SHEET 3 OF 4
KUIHELANI HIGHWAY WIDENING
HONOAPIILANI HIGHWAY TO PUUNENE AVENUE
FEDERAL-AID PROJECT NO. NH-0380(9)
Scale: As Shown Date: Sept. 14, 2001

SHEET No. S-15 OF 54 SHEETS

ORIGINAL PLAN | SURVEY PLOTTED BY | DRAWN BY | TRACED BY | DESIGNED BY | QUANTITIES BY | CHECKED BY | DATE | NOTE BOOK | No.

h:/KUIHELANI/STRUCT/ST-DET15.dgn

"AS-BUILT"

C.O. 177

FED. ROAD DIST. NO.	STATE	FED. AID PROJ. NO.	FISCAL YEAR	SHEET NO.	TOTAL SHEETS
HAWAII	HAW.	NH-0380(9)	2000	C.O. 177 S-1	380

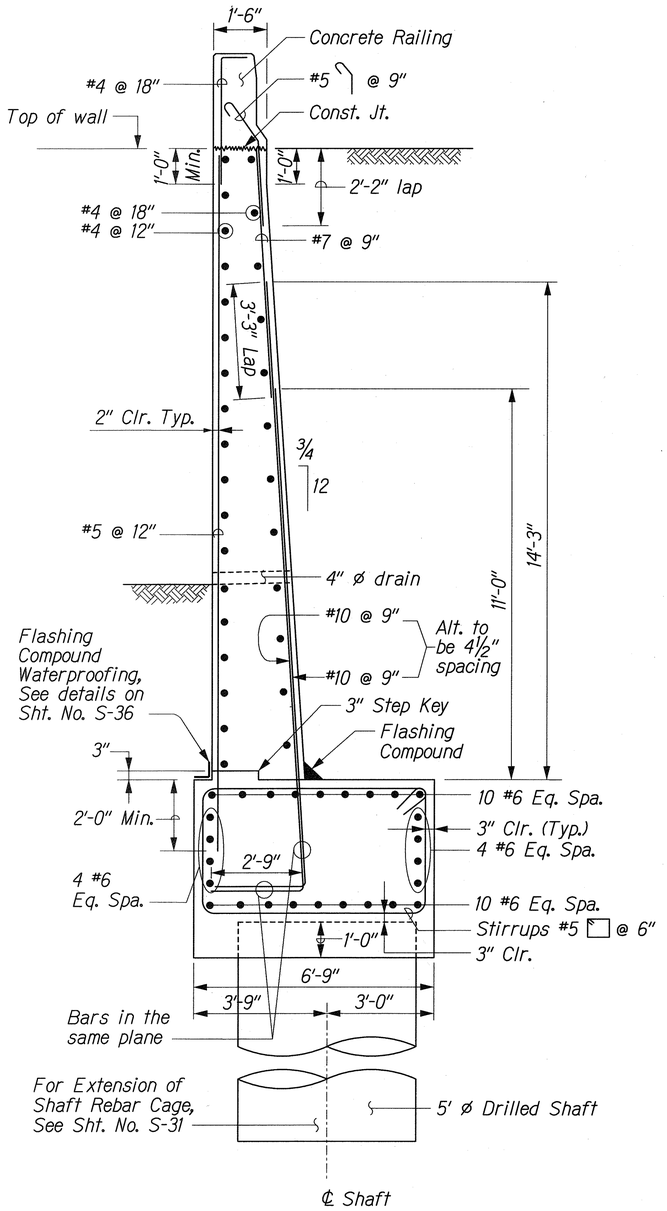

SECTION C S-12 S-15A
Scale: 1/2" = 1'-0"

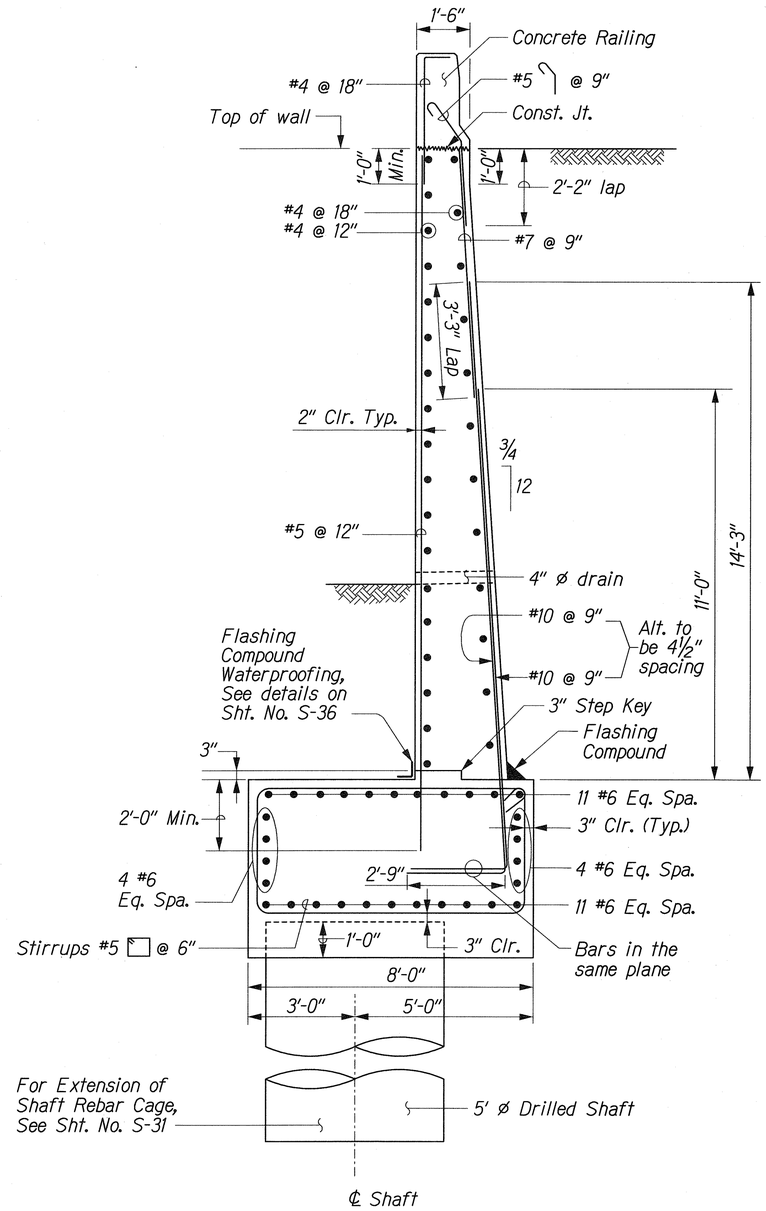

SECTION D S-12 S-15A
Scale: 1/2" = 1'-0"

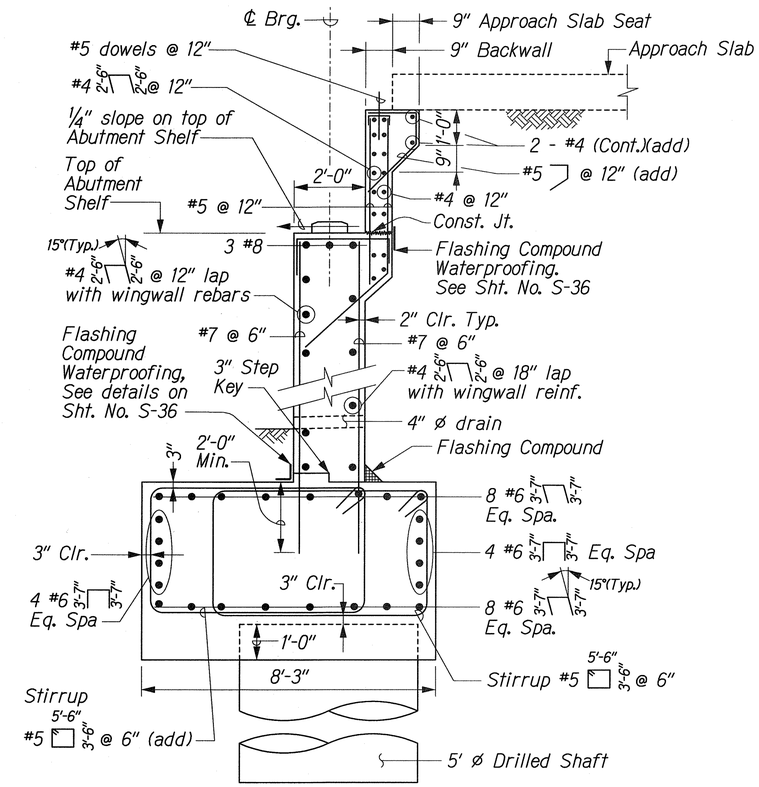

ABUTMENT NO. 2 SECTION
Scale: 1/2" = 1'-0"

Date	Revision
6/27/02	Added Abutment No. 2 Section
5/15/02	Added This Sheet

HUI PANG CHEN LICENSED PROFESSIONAL ENGINEER No. 3865-S HAWAII, U.S.A.

THIS WORK WAS PREPARED BY ME OR UNDER MY SUPERVISION.

Huipang Chen

STATE OF HAWAII
DEPARTMENT OF TRANSPORTATION
HIGHWAYS DIVISION

WAIKAPU STREAM BRIDGE
ABUTMENT SHEET 3 OF 4
KUIHELANI HIGHWAY WIDENING
HONOAPIILANI HIGHWAY TO PUUNENE AVENUE
FEDERAL-AID PROJECT NO. NH-0380(9)

Scale: As Shown Date: Sept. 14, 2001

SHEET No. S-15A OF 54 SHEETS

C.O. 177 S-1

ORIGINAL PLAN | SURVEY PLOTTED BY | DRAWN BY | TRACED BY | DESIGNED BY | QUANTITIES BY | CHECKED BY | DATE | NOTE BOOK | No.

Js:/KUIHELANI/STRUCT/ST-DET15A.dgn

FED. ROAD DIST. NO.	STATE	FED. AID PROJ. NO.	FISCAL YEAR	SHEET NO.	TOTAL SHEETS
HAWAII	HAW.	NH-0380(9)	2000	178	380

LEGEND FOR AS-BUILT POSTINGS

∿∿∿	Squiggly line for as-built deletion
~~100.00~~	Double line for as-built deletion
Roadway	Text for as-built posting

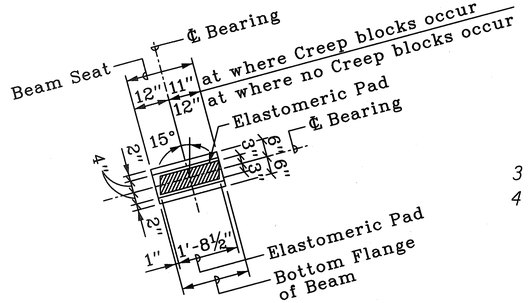

PLAN

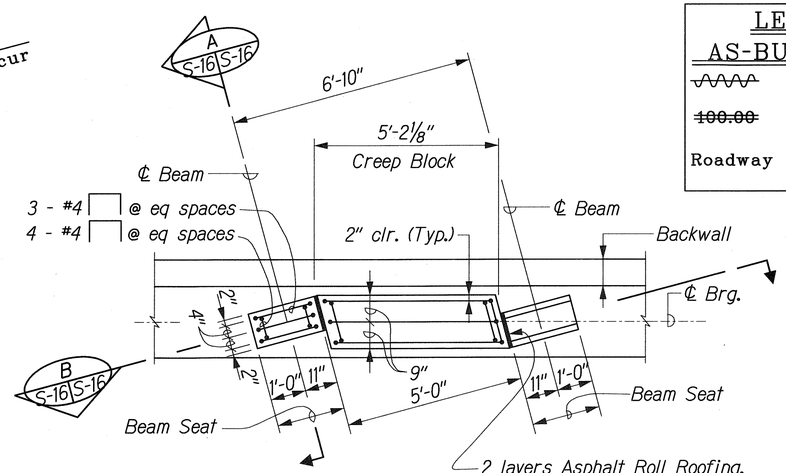

PLAN

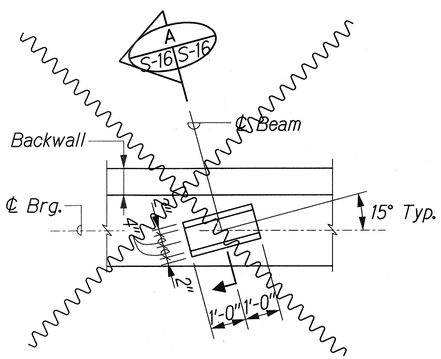

PLAN

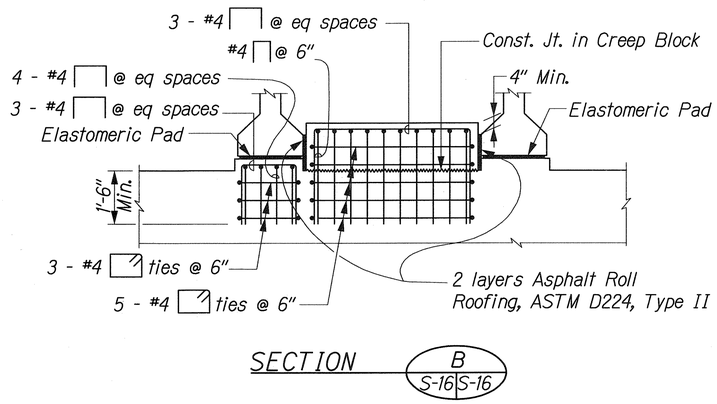

BEAM SEAT AND CREEP BLOCK

Scale: ½" = 1'- 0"

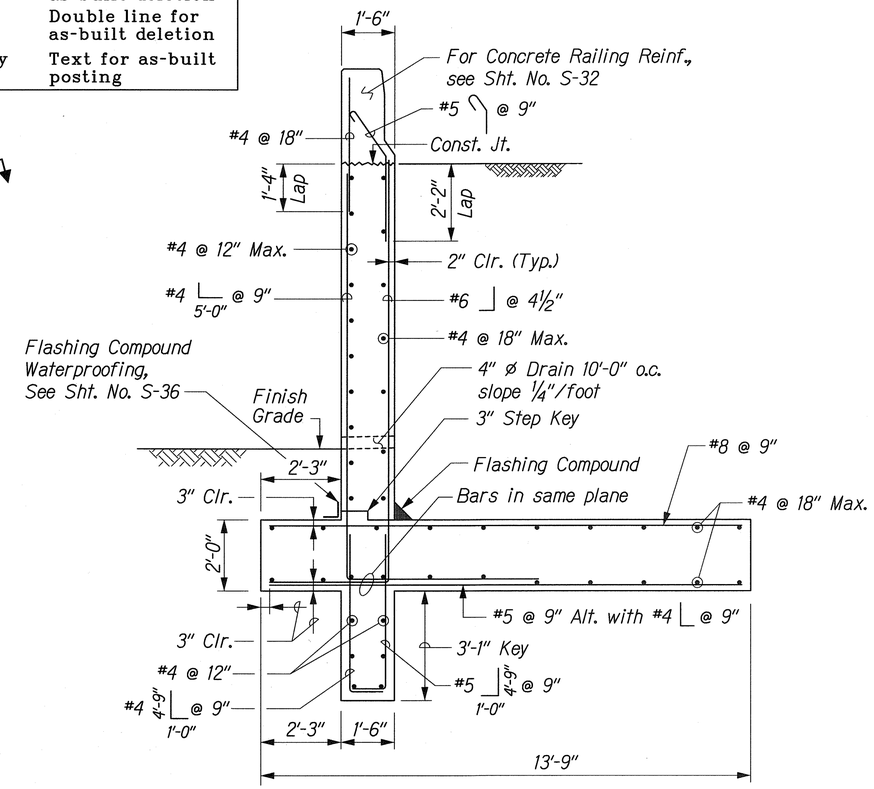

RETAINING WALL NO. 5 TYPICAL SECTION

Scale: ½" = 1'-0"

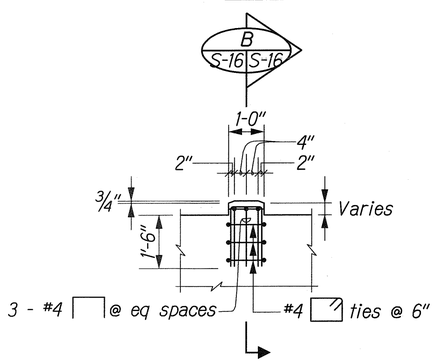

BEAM SEAT

Scale: ½" = 1'- 0"

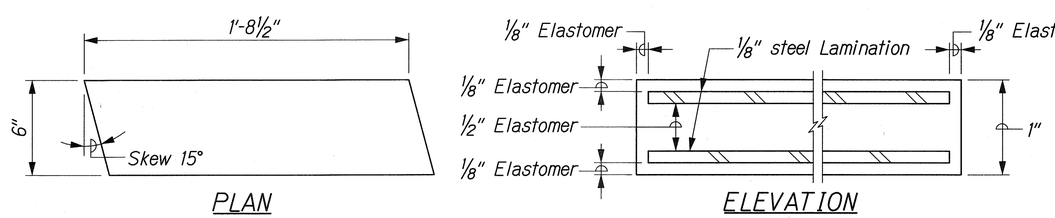

ELASTOMERIC PAD DETAIL

Not to Scale

ORIGINAL PLANS	SURVEY PLOTTED BY	DATE
	DRAWN BY	
	TRACED BY	
NOTE BOOK	DESIGNED BY	
	QUANTITIES BY	
No.	CHECKED BY	

J:/KUIHELANI/STRUCT/ST-DET21.dgn

HUI PANG CHEN
LICENSED PROFESSIONAL ENGINEER
No. 3865-S
HAWAII, U.S.A.

THIS WORK WAS PREPARED BY ME OR UNDER MY SUPERVISION.

STATE OF HAWAII
DEPARTMENT OF TRANSPORTATION
HIGHWAYS DIVISION

WAIKAPU STREAM BRIDGE
ABUTMENTSHEET 4 OF 4
KUIHELANI HIGHWAY WIDENING
HONOAPIILANI HIGHWAY TO PUUNENE AVENUE
FEDERAL-AID PROJECT NO. NH-0380(9)

Scale: As Shown Date: Sept. 14, 2001

SHEET No. S-16 OF 54 SHEETS

"AS-BUILT"

FED. ROAD DIST. NO.	STATE	FED. AID PROJ. NO.	FISCAL YEAR	SHEET NO.	TOTAL SHEETS
HAWAII	HAW.	NH-0380(9)	2000	179	380

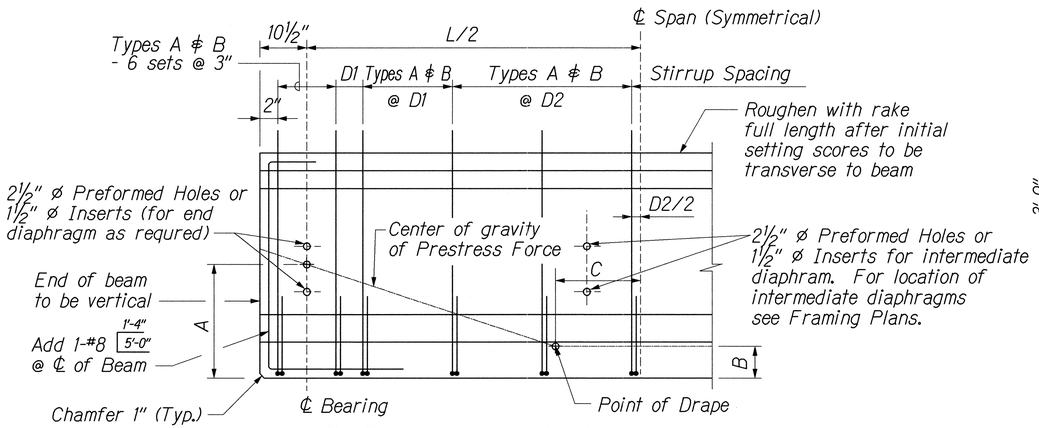

LONGITUDINAL SECTION

N.T.S.

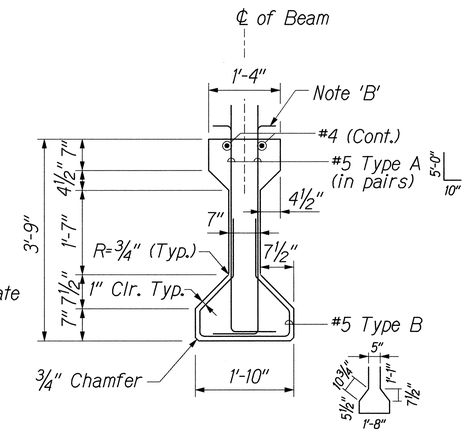

AASHTO TYPE III TYPICAL BEAM SECTION

N.T.S.

PRESTRESSED BEAM NOTES:

1. Concrete strength for precast/prestressed concrete beam shall be 6000 psi at 28 days.
2. Minimum compressive strength of concrete at transfer, see Table this Sheet.
3. Prestressing strands shall be ½" diameter, 270 ksi, low-relax strands conforming to ASTM A 416. The estimated total losses due to creep, shrinkage, elastic shortening, and relaxation of steel are 53,000 psi.
4. Non-prestressed reinforcing steel in prestressed beam shall be Grade 60 unless otherwise noted. For properties, see State Standard Specifications.
5. The calculated camber includes the effect of the initial prestress force and the weight of the beam after removal from the bed. Positive values shown for calculated camber indicate a net upward deflection. The calculated camber value has been multiplied by a factor of 2 to approximate the effect of camber growth and concrete creep. The actual camber shall not exceed the calculated camber by more than ½".
6. The dead load deflection includes the combined effects of the weight of beam, slab, haunch, diaphragm, and concrete railing.
7. Strand release sequence shall not induce any lateral deflection of the beam. For Strand release procedures, see Special Provisions.
8. The Contractor shall submit his proposed strand releasing sequence to the Engineer for acceptance.
9. During curing, care shall be taken to avoid any lateral deflection of the beam due to improper orientation.
10. Lifting devices shall be placed as close as possible to the centerline of bearings of the beam. Details and locations of lifting devices shall be submitted to the Engineer for acceptance. Such approval does not relieve the Contractor of his responsibilities if beam is damaged due to the failure of the lifting device.
11. For details of end and intermediate diagrams see Sheet No. S-18.

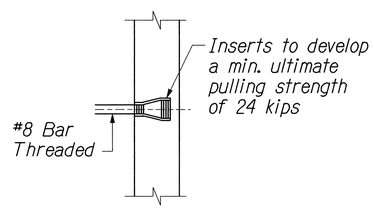

INSERT DETAIL

N.T.S.

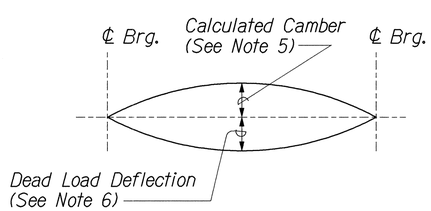

CAMBER DIAGRAM

NOTE 'A':

For low relaxation strands, the stress immediately prior to transfer shall not exceed 0.75 fs', where fs' is the ultimate tensile strength of prestressing steel.

NOTE 'B':

Bend bars in field 2" below top of deck. All reinforcing dimensions are out to out.

BEAM SCHEDULE

BEAM TYPE	INITIAL PRESTRESS FORCE (KIPS) (BEFORE ANY LOSS)	FINAL PRESTRESS FORCE (KIPS) (AFTER ALL LOSSES)	CALCULATED CAMBER SEE NOTE 5	DEAD LOAD DEFLECTION SEE NOTE 6	LOCATION OF CENTER OF GRAVITY OF PRESTRESSED FORCE			STIRRUPS		REQUIRED MIN. ULT. CONC. STRENGTH BEFORE RELEASE OF STRANDS (PSI)	REMARKS
					DIST A	DIST B	DIST. TO PT. OF DRAPE C	NO. OF STIRRUPS @ SPACING D1	NO. OF STIRRUPS @ SPACING D2		
III	743.58	548.76	-0.969"	0.59"	12.5"	5.667"	5.8'	11 @ 12"	Balance @ 18"	4500	

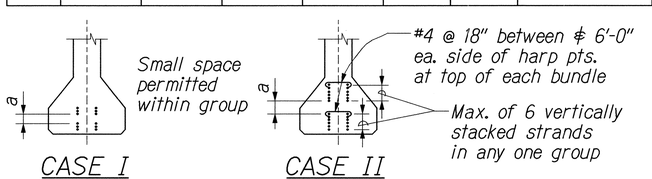

CASE I

CASE II

BUNDLING OF PRESTRESSED REINFORCEMENT

ARRANGEMENT AND CLEARANCE FOR PRETENSIONED STRANDS

1. Strands may be bundled in groups as shown.
2. The min. distance "a" between groups or individual strands is 2" for ½" ø Strands.
3. "a" is measured between centers of adjacent strands.

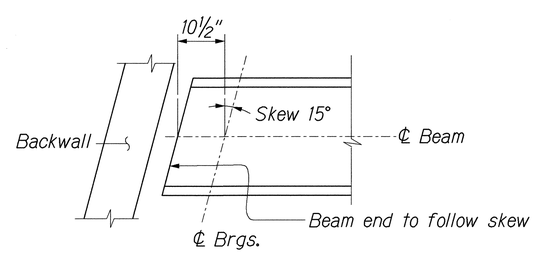

BEAM END PLAN

N.T.S.

ORIGINAL PLAN
REVISED PLAN
NOTE BOOK
No.
SURVEY PLOTTED BY
DRAWN BY
TRACED BY
DESIGNED BY
QUANTITIES BY
CHECKED BY
DATE

J:/KUIHELANI/STRUCT/BR-DET04.dgn

HUI PANG CHEN
LICENSED PROFESSIONAL ENGINEER
No. 3865-S
HAWAII, U.S.A.

THIS WORK WAS PREPARED BY ME OR UNDER MY SUPERVISION.

Hui Pang Chen

STATE OF HAWAII
DEPARTMENT OF TRANSPORTATION
HIGHWAYS DIVISION

WAIKAPU STREAM BRIDGE

PRESTRESSED BEAM DETAILS-1

KUIHELANI HIGHWAY WIDENING

HONOAPIILANI HIGHWAY TO PUUNENE AVENUE

FEDERAL-AID PROJECT NO. NH-0380(9)

Scale: Not to Scale Date: Sept. 14, 2001

SHEET No. S-17 OF 54 SHEETS

FED. ROAD DIST. NO.	STATE	FED. AID PROJ. NO.	FISCAL YEAR	SHEET NO.	TOTAL SHEETS
HAWAII	HAW.	NH-0380(9)	2000	180	380

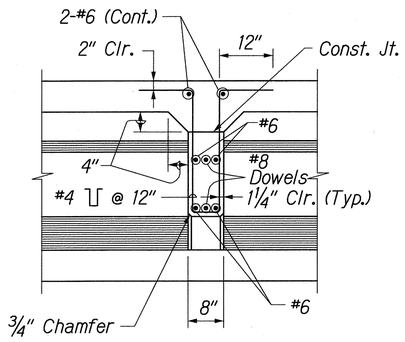

SECTION A S-18 S-18

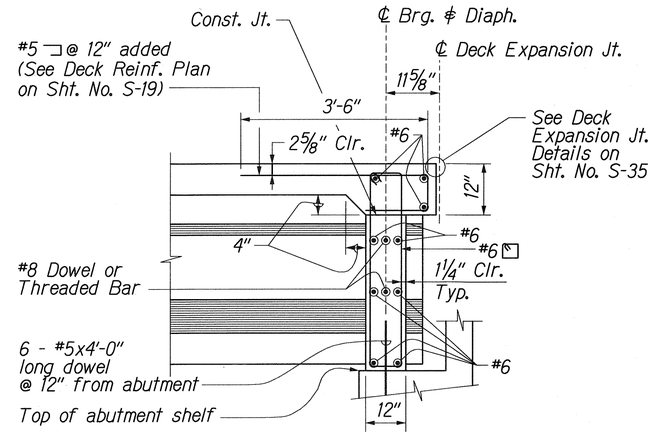

SECTION B S-18 S-18

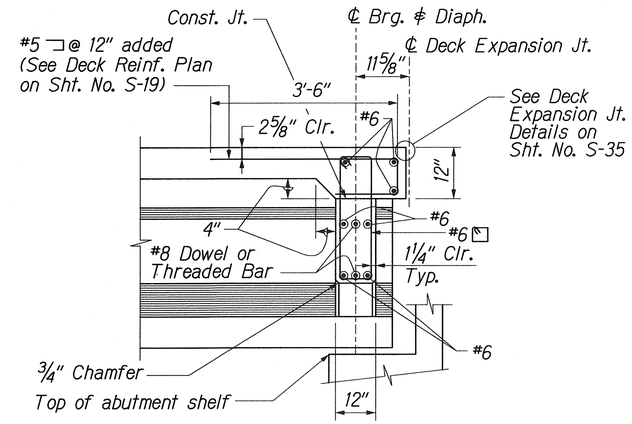

SECTION C S-18 S-18

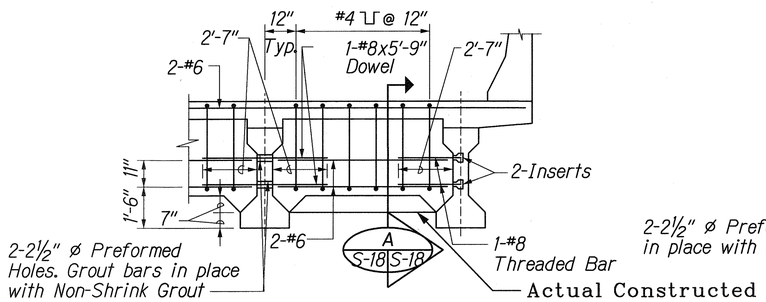

INTERMEDIATE DIAPHRAGM

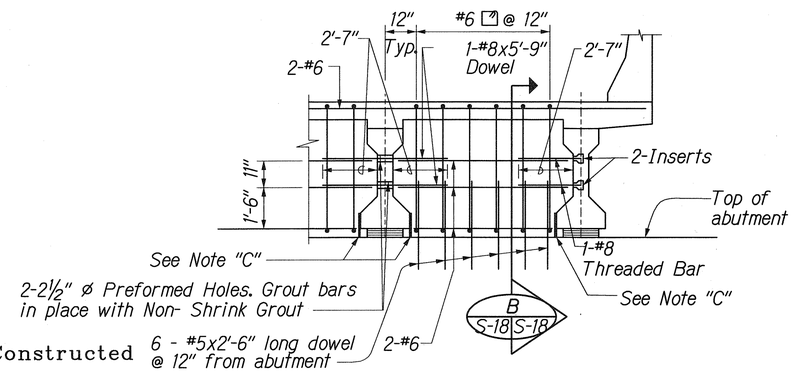

AT HINGE BEARING

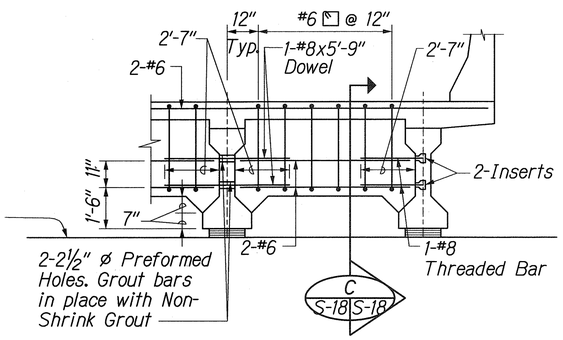

AT EXPANSION BEARING

TYPICAL INTERMEDIATE DIAPHRAGM DETAILS

N.T.S.

TYPICAL END DIAPHRAGM DETAILS

N.T.S.

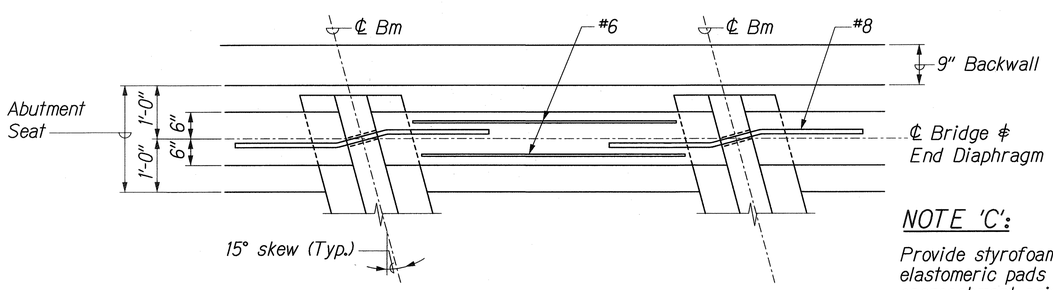

END DIAPHRAGM DETAILS

Scale: ¾" = 1'-0"

NOTE 'C':

Provide styrofoam to protect the elastomeric pads from concrete encroachment prior to placing end diaphragm concrete at the hinge bearing.

LEGEND FOR AS-BUILT POSTINGS

~~	Squiggly line for as-built deletion
~~100.00~~	Double line for as-built deletion
Roadway	Text for as-built posting

HUI PANG CHEN
LICENSED PROFESSIONAL ENGINEER
No. 3865-S
HAWAII, U.S.A.

THIS WORK WAS PREPARED BY ME OR UNDER MY SUPERVISION.

Huipang Chen

STATE OF HAWAII
DEPARTMENT OF TRANSPORTATION
HIGHWAYS DIVISION

WAIKAPU STREAM BRIDGE

PRESTRESSED BEAM DETAILS-2

KUIHELANI HIGHWAY WIDENING
HONOAPIILANI HIGHWAY TO PUUNENE AVENUE
FEDERAL-AID PROJECT NO. NH-0380(9)

Scale: As Shown Date: Sept. 14, 2001

SHEET No. S-18 OF 54 SHEETS

ORIGINAL PLAN	SURVEY PLOTTED BY	DATE
	DRAWN BY	
	TRACED BY	
NOTE BOOK	DESIGNED BY	
	QUANTITIES BY	
No.	CHECKED BY	

J:/KUIHELANI/STRUCT/BR-DET06.dgn

"AS-BUILT"

FED. ROAD DIST. NO.	STATE	FED. AID PROJ. NO.	FISCAL YEAR	SHEET NO.	TOTAL SHEETS
HAWAII	HAW.	NH-0380(9)	2000	181	380

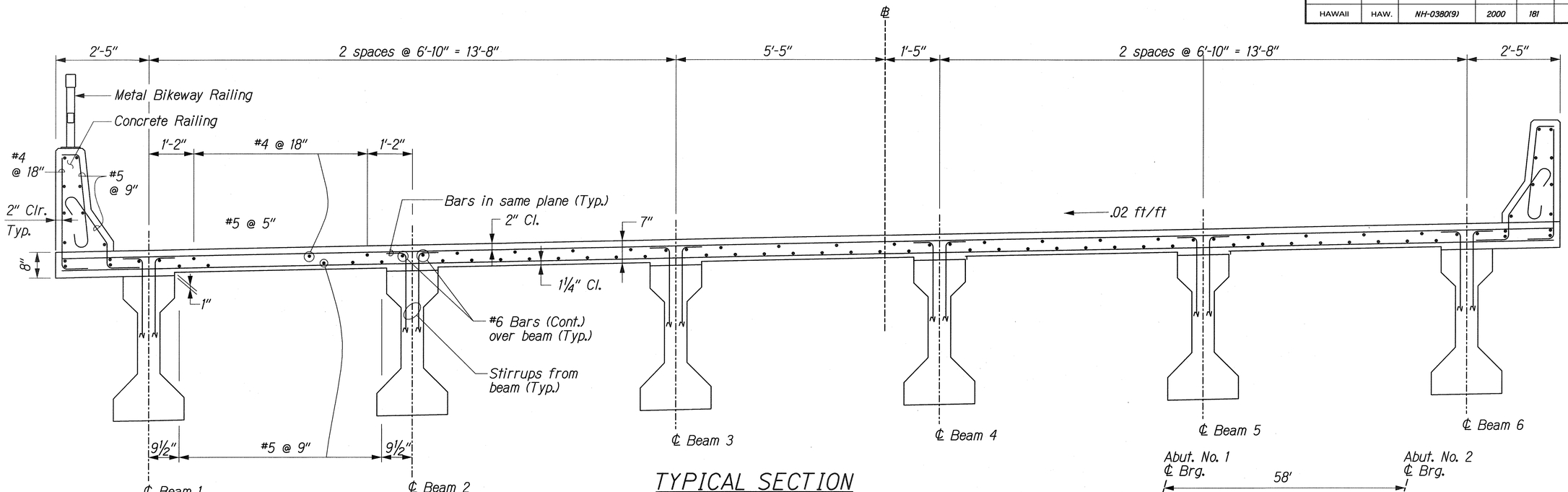

TYPICAL SECTION

Scale: ¾" = 1'-0"

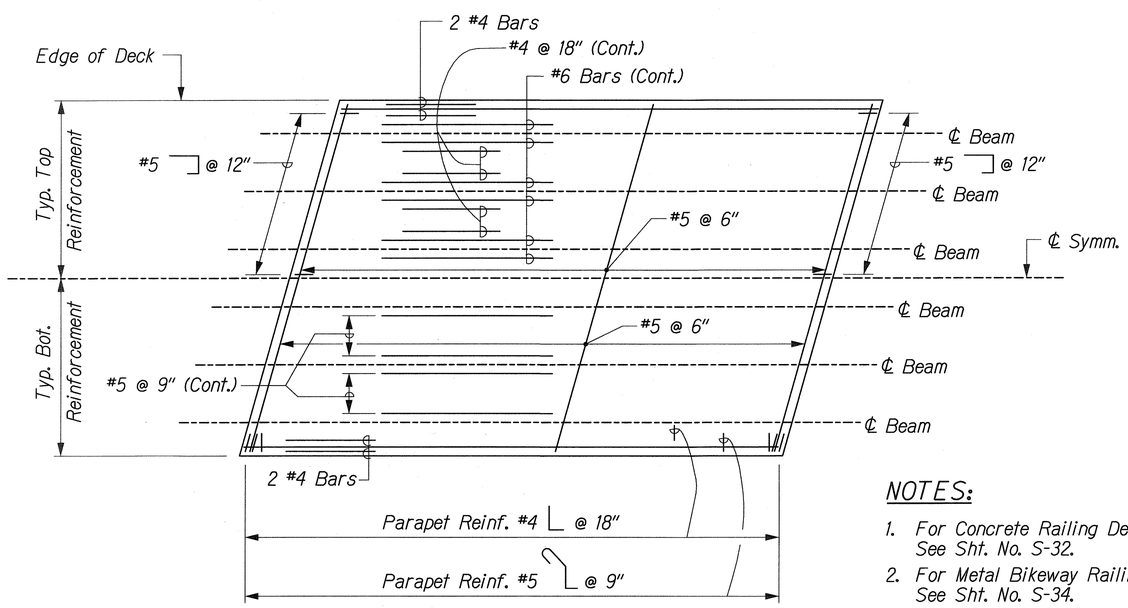

TYPICAL DECK REINF. PLAN

Not to Scale

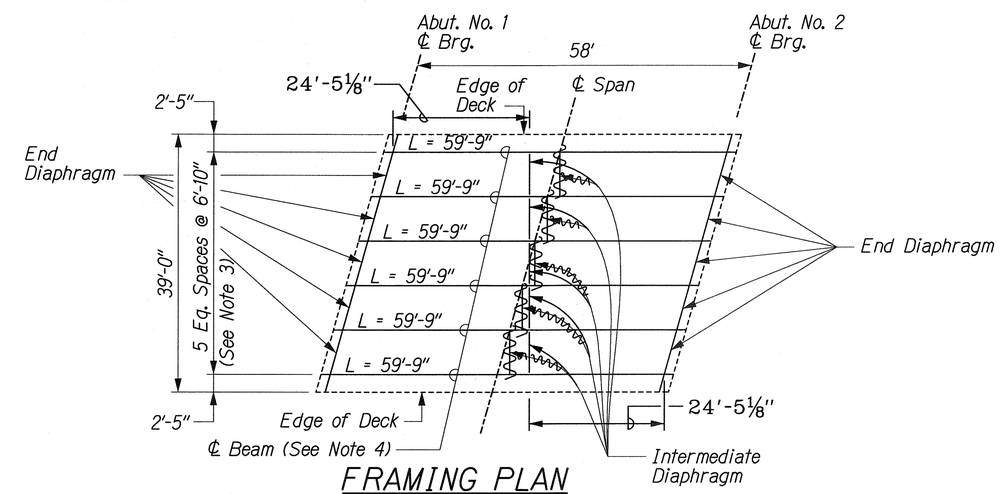

FRAMING PLAN

Not to Scale

NOTES:

1. For Concrete Railing Detail, See Sht. No. S-32.
2. For Metal Bikeway Railing Details, See Sht. No. S-34.
3. For skew dimensions along ℄ Brg., See Sht. No. S-13 & S-14.
4. "L" denotes the total length of plank along Level line.

LEGEND FOR AS-BUILT POSTINGS

∿∿∿	Squiggly line for as-built deletion
~~100.00~~	Double line for as-built deletion
Roadway	Text for as-built posting

HUI PANG CHEN
LICENSED PROFESSIONAL ENGINEER
No. 3865-S
HAWAII, U.S.A.

THIS WORK WAS PREPARED BY ME OR UNDER MY SUPERVISION.

STATE OF HAWAII
DEPARTMENT OF TRANSPORTATION
HIGHWAYS DIVISION

WAIKAPU STREAM BRIDGE
DECK REINF. & FRAMING PLAN
KUIHELANI HIGHWAY WIDENING
HONOAPIILANI HIGHWAY TO PUUNENE AVENUE
FEDERAL-AID PROJECT NO. NH-0380(9)

Scale: As Shown Date: Sept. 14, 2001

SHEET No. S-19 OF 54 SHEETS

ORIGINAL PLAN	SURVEY PLOTTED BY	DATE
	DRAWN BY	
	TRACED BY	
NOTE BOOK	DESIGNED BY	
	QUANTITIES BY	
No.	CHECKED BY	

J:/KUIHELANI/STRUCT/ST-DETT7.dgn

"AS-BUILT"

FED. ROAD DIST. NO.	STATE	FED. AID PROJ. NO.	FISCAL YEAR	SHEET NO.	TOTAL SHEETS
HAWAII	HAW.	NH-0380(9)	2000	182	380

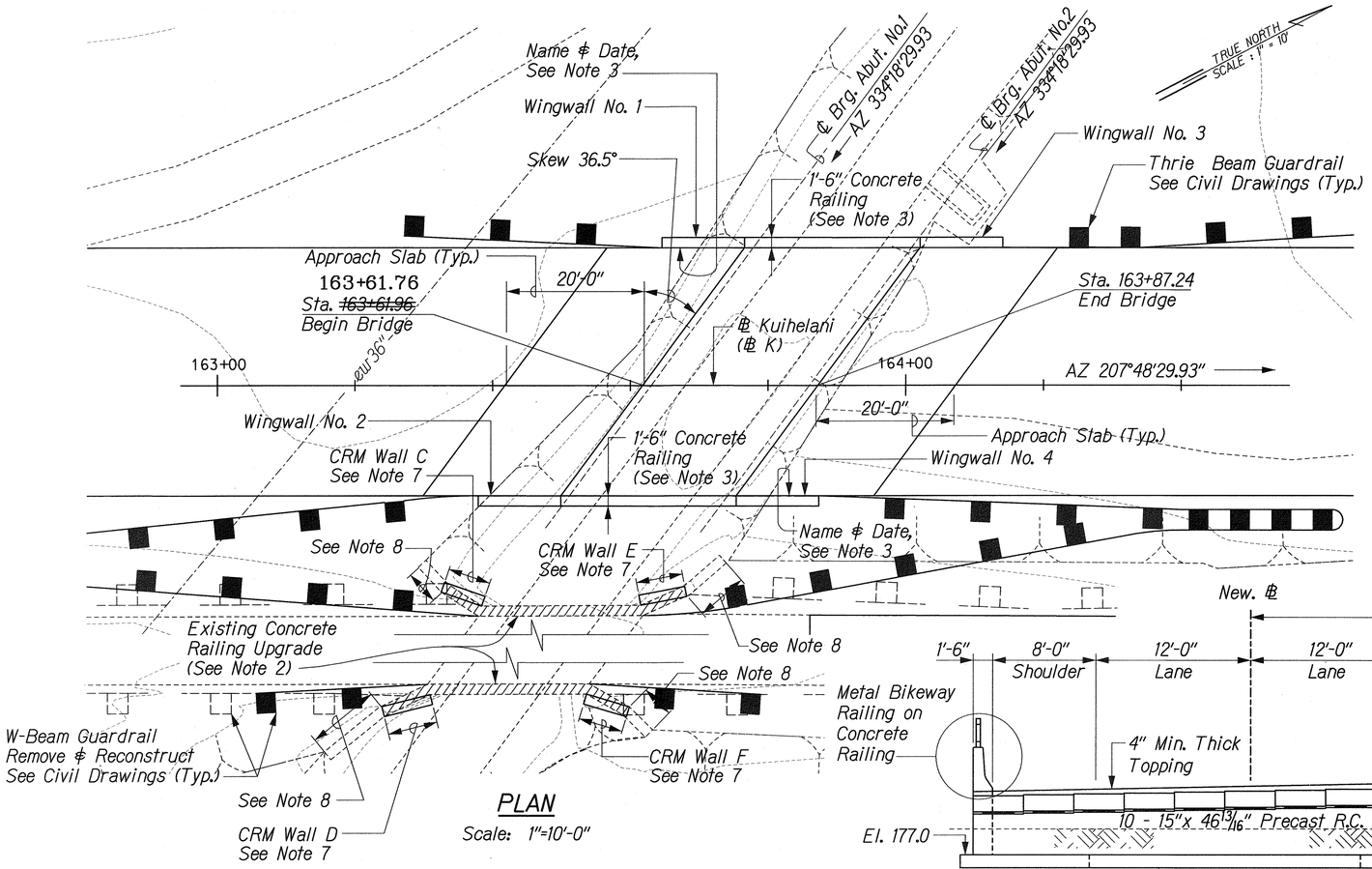

PLAN

Scale: 1"=10'-0"

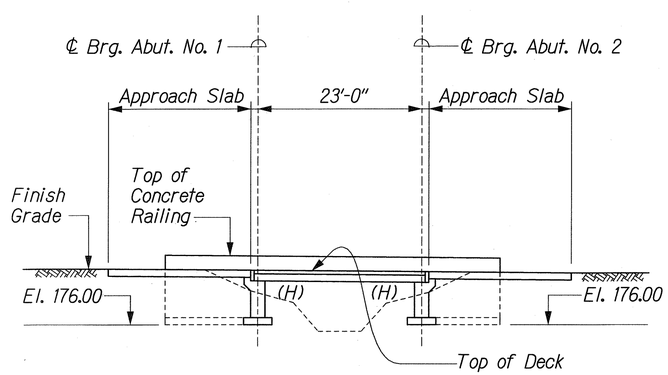

ELEVATION

Scale: 1"=10'-0"

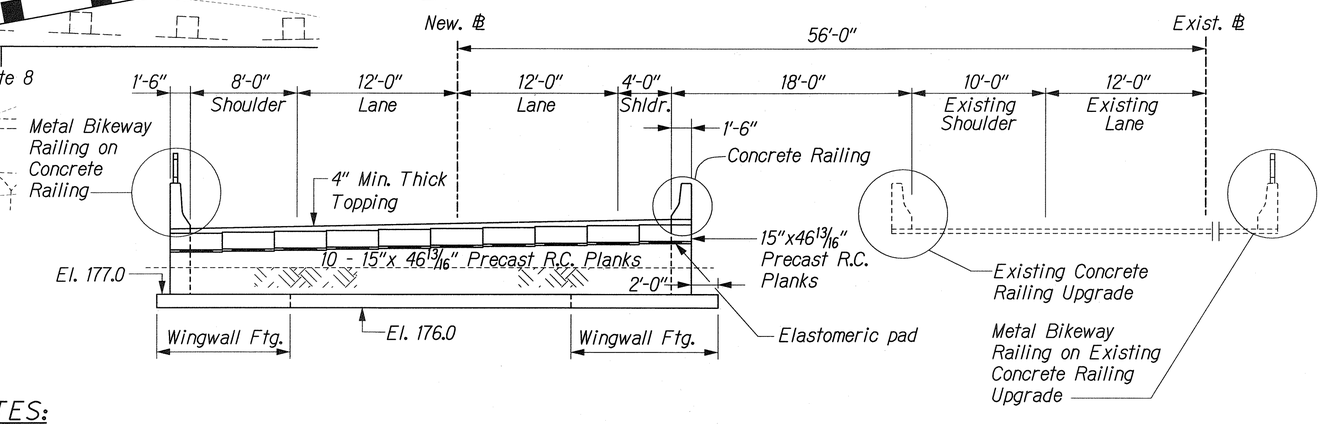

TYPICAL SECTION

Scale: 3/16" = 1'-0"

ESTIMATED QUANTITIES

ITEM NO.	ITEM	UNIT	QUANTITIES
206.	Structure Excavation for Abutments & Walls	CY	236
206.	Structure Backfill for Abutments & Walls	CY	146
646.	Geocomposite Drain for Abutments & Walls	SY	71
503.	Concrete In Bridge (Except Footing)	LS	(94 CY)
503.	Concrete In Bridge Footing	LS	(39 CY)
503.	Concrete In Approach Slab	LS	(24 CY)
503.	Precast Reinforced Concrete Plank	LF	251
507.	Concrete Railings (Include End Post)	LF	99
507.	Metal Bikeway Railing	LF	80
507.	Upgrade of Existing Concrete Railing	LF	61
508.	Cement Rubble Masonry	LS	(14 CY)
602.	Reinforcing Steel for Bridge	LS	(61,460 lbs)

NOTES:

1. For General Notes, See Sht. No. S-2.
2. For Existing Concrete Railing Upgrade Details, See Sht. No. S-33.
3. For Bridge Name & Date location, Concrete Railing Details, See Sht. No. S-32.
4. For Approach Slab Details, See Sht. No. S-35.
5. For Metal Bikeway Railing Details, See Sht. No. S-34.
6. For Payment Limit, See Sht. No. S-30.
7. Existing Curved Concrete end post to be removed for upgrade of metal guardrail connection as shown on Sht. No. S-33. Reconstruct CRM Walls behind the restored metal guardrail posts. For Details, See Sht. No. S-37.
8. Existing Concrete Walls to remain.

LEGEND FOR AS-BUILT POSTINGS

~~	Squiggly line for as-built deletion
~~100.00~~	Double line for as-built deletion
Roadway	Text for as-built posting

ORIGINAL PLAN	SURVEY PLOTTED BY	DATE
	DRAWN BY	
	TRACED BY	
NOTE BOOK	DESIGNED BY	
	QUANTITIES BY	
No.	CHECKED BY	

J:/KUIHELANI/STRUCT/BR-04.dgn

THIS WORK WAS PREPARED BY ME OR UNDER MY SUPERVISION.

HUI PANG CHEN LICENSED PROFESSIONAL ENGINEER No. 3865-S HAWAII, U.S.A.

STATE OF HAWAII
DEPARTMENT OF TRANSPORTATION
HIGHWAYS DIVISION

WAIHEE DITCH BRIDGE
PLAN & LONGITUDINAL SECTION
KUIHELANI HIGHWAY WIDENING
HONOAPIILANI HIGHWAY TO PUUNENE AVENUE
FEDERAL-AID PROJECT NO. NH-0380(9)

Scale: As Shown Date: Sept. 14, 2001

SHEET No. S-20 OF 54 SHEETS

"AS-BUILT"

FED. ROAD DIST. NO.	STATE	FED. AID PROJ. NO.	FISCAL YEAR	SHEET NO.	TOTAL SHEETS
HAWAII	HAW.	NH-0380(9)	2000	183	380

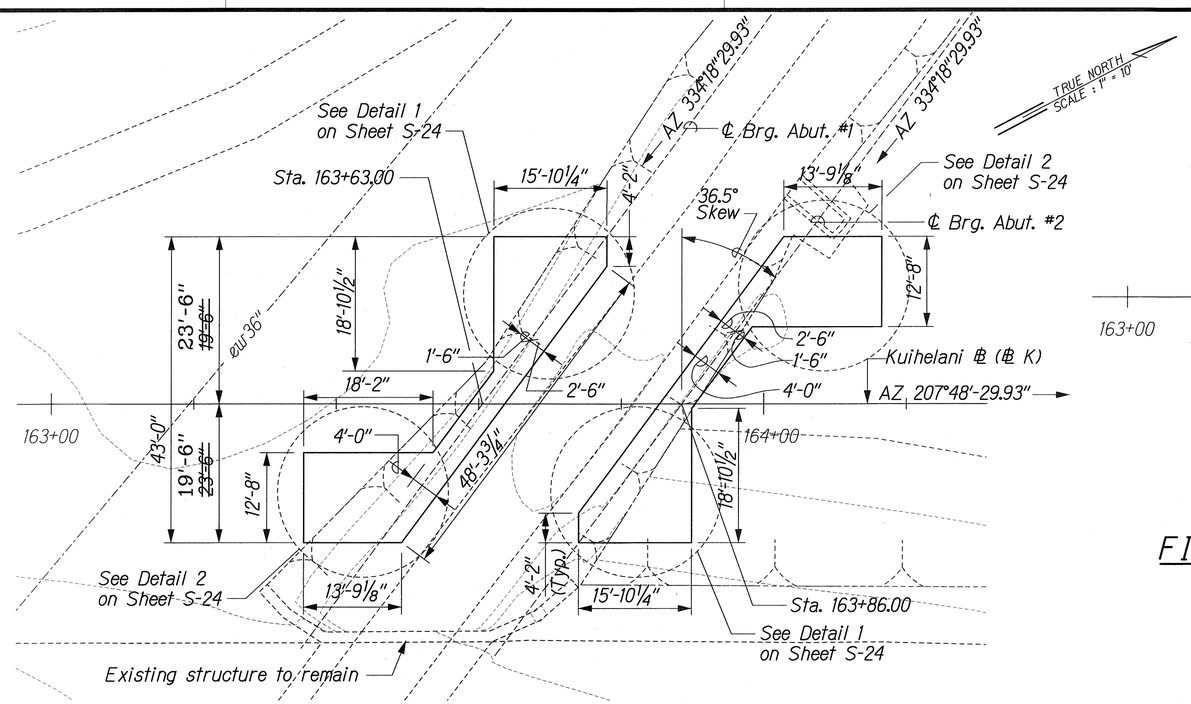

FOUNDATION PLAN

Scale: 1"=10'

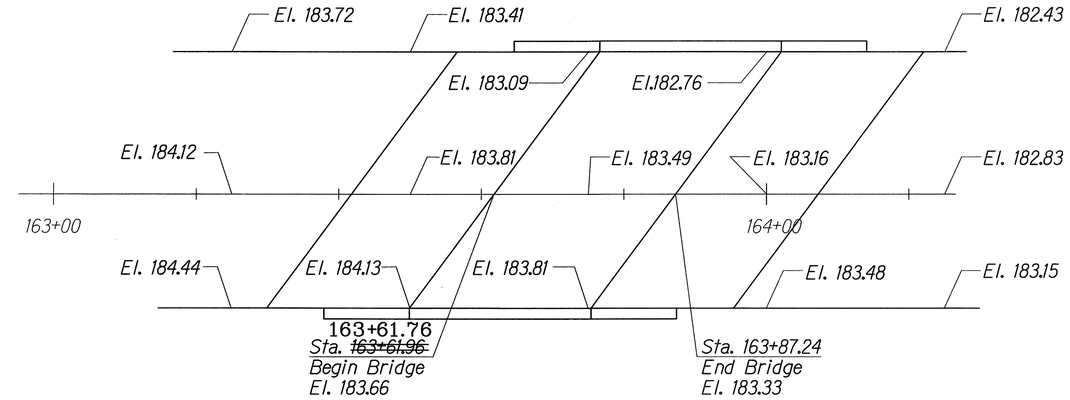

FINISH SPOT ELEVATION PLAN (@ 25'-0" INTERVALS)

Scale: 1"=10'

NOTE:

1. For additional footing reinforcing information, see Typical Abutment and Wingwall Section on Sheet S-24.
2. After the elastronic pads are in place, the Contractor shall fill the annular space between the dowel and the elastomeric pad with styrofoam or other acceptable material to prevent grout from flowing into the hole prior to installation of planks.
3. For locations of Elastomeric Pads, See Sht. Nos. S-22, S-23 and S-24.

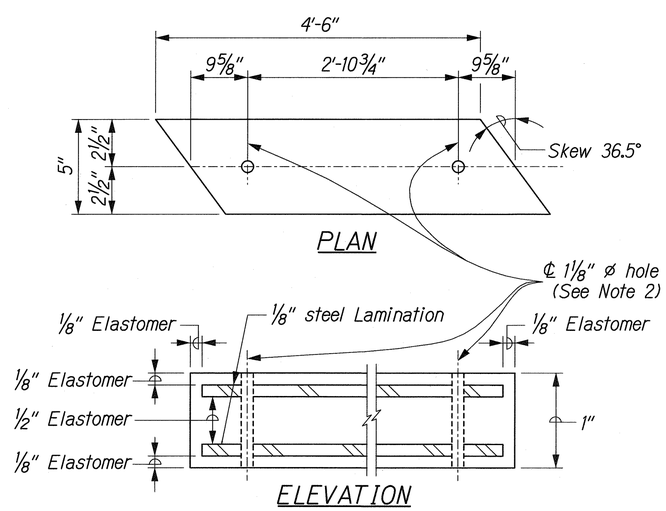

ELASTOMERIC PAD DETAIL

Not to Scale

LEGEND FOR AS-BUILT POSTINGS	
~~	Squiggly line for as-built deletion
~~100.00~~	Double line for as-built deletion
Roadway	Text for as-built posting

HUI PANG CHEN LICENSED PROFESSIONAL ENGINEER No. 3865-S HAWAII, U.S.A.

THIS WORK WAS PREPARED BY ME OR UNDER MY SUPERVISION.

STATE OF HAWAII
DEPARTMENT OF TRANSPORTATION
HIGHWAYS DIVISION

WAIHEE DITCH BRIDGE

FOUNDATION PLAN & SPOT ELEV.

KUIHELANI HIGHWAY WIDENING

HONOAPIILANI HIGHWAY TO PUUNENE AVENUE

FEDERAL-AID PROJECT NO. NH-0380(9)

Scale: As Shown Date: Sept. 14, 2001

SHEET No. S-21 OF 54 SHEETS

ORIGINAL PLAN | SURVEY PLOTTED BY | DRAWN BY | TRACED BY | DESIGNED BY | QUANTITIES BY | CHECKED BY | DATE | NOTE BOOK No.

J:/KUIHELANI/STRUCT/ST-DET6.dgn

"AS-BUILT"

FED. ROAD DIST. NO.	STATE	FED. AID PROJ. NO.	FISCAL YEAR	SHEET NO.	TOTAL SHEETS
HAWAII	HAW.	NH-0380(9)	2000	184	380

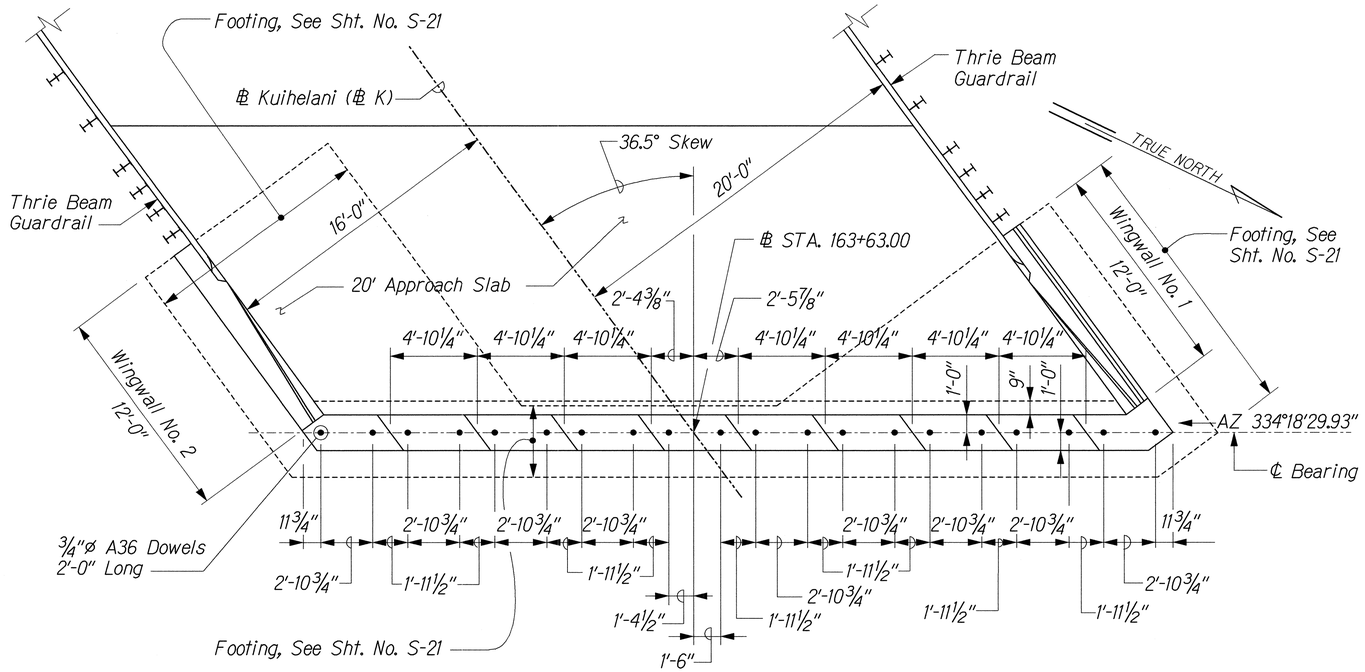

ABUTMENT NO. 1 PLAN

Scale: 1/4" = 1'-0"

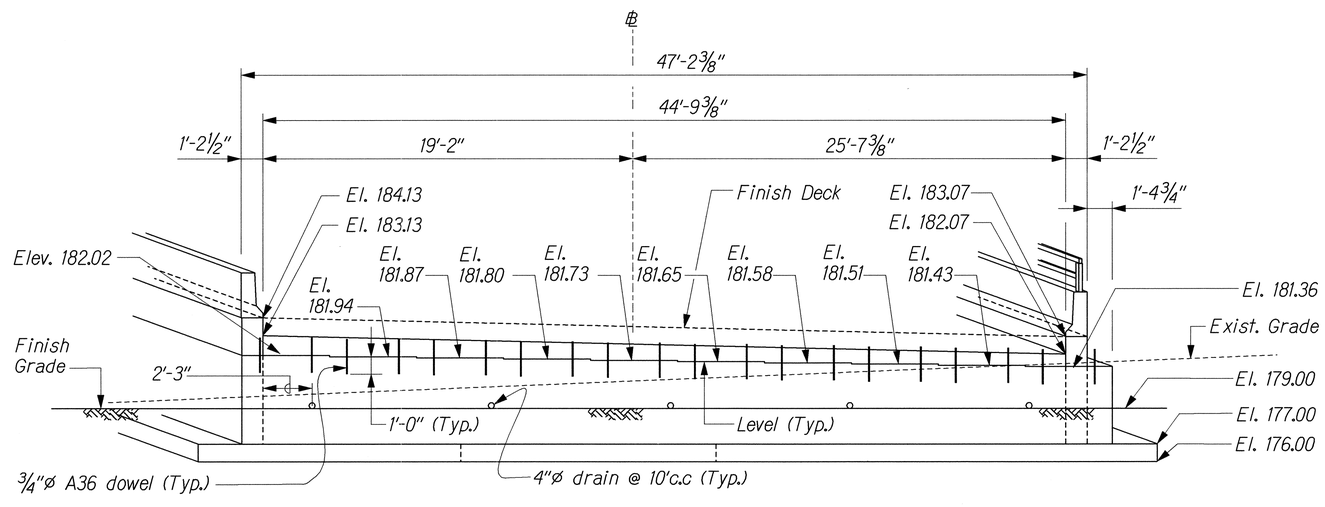

ABUTMENT NO. 1 ELEVATION

Scale: 1/4" = 1'-0"

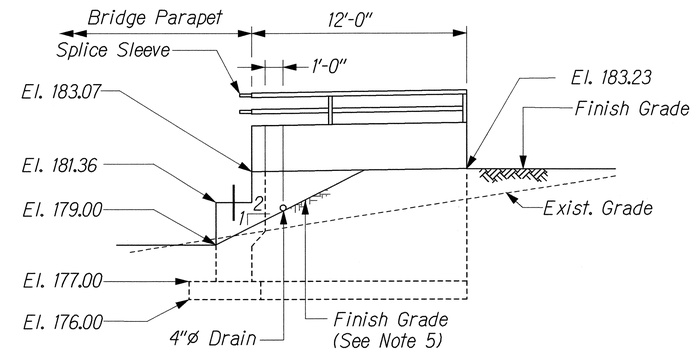

WINGWALL NO. 1 ELEVATION

Scale: 1/4" = 1'-0"

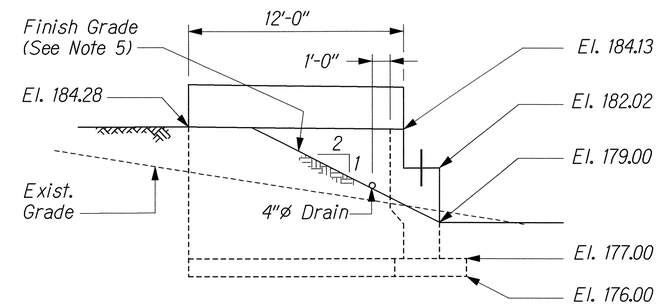

WINGWALL NO. 2 ELEVATION

Scale: 1/4" = 1'-0"

NOTES:

1. For location plan, See Sht. No. S-20.
2. For Approach Slab Details, See Sht. No. S-35.
3. The Contractor shall use rigid template to install the 3/4"ø A36 dowels to the locations as shown.
4. For 4"ø PVC Electric Conduit in concrete railing and wall, See Sht. No. S-32.
5. See Note 7(L) on Sht. No. S-2.

ORIGINAL PLAN	SURVEY PLOTTED BY	DATE
	DRAWN BY	
	TRACED BY	
NOTE BOOK	DESIGNED BY	
	QUANTITIES BY	
No.	CHECKED BY	

J:/KUIHELANI/STRUCT/ST-DET13.dgn

HUI PANG CHEN LICENSED PROFESSIONAL ENGINEER No. 3865-S HAWAII, U.S.A.

THIS WORK WAS PREPARED BY ME OR UNDER MY SUPERVISION.

STATE OF HAWAII
DEPARTMENT OF TRANSPORTATION
HIGHWAYS DIVISION

WAIHEE STREAM BRIDGE
ABUTMENT SHEET 1 OF 3
KUIHELANI HIGHWAY WIDENING
HONOAPIILANI HIGHWAY TO PUUNENE AVENUE
FEDERAL-AID PROJECT NO. NH-0380(9)

Scale: 1/4" = 1'-0" Date: Sept. 14, 2001

SHEET No. S-22 OF 54 SHEETS

FED. ROAD DIST. NO.	STATE	FED. AID PROJ. NO.	FISCAL YEAR	SHEET NO.	TOTAL SHEETS
HAWAII	HAW.	NH-0380(9)	2000	185	380

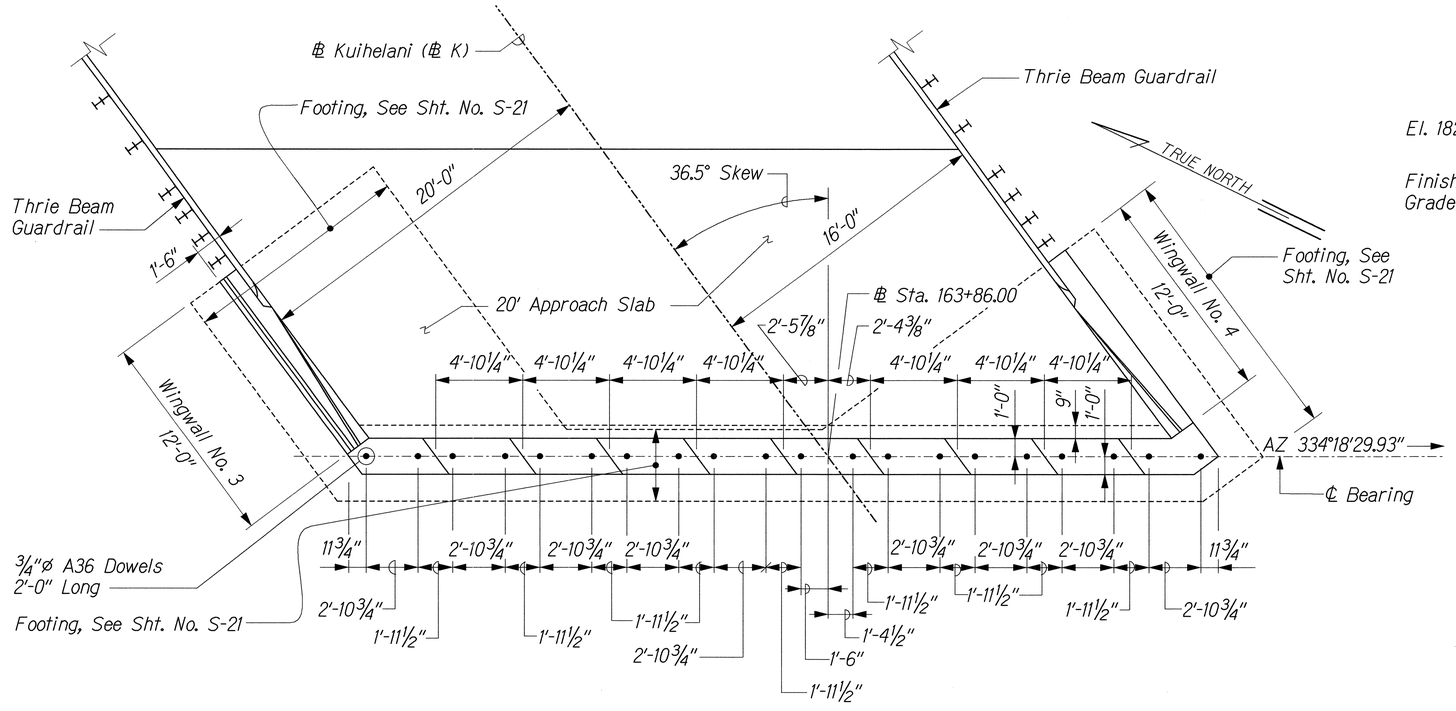

ABUTMENT NO. 2 PLAN

Scale: ¼" = 1'-0"

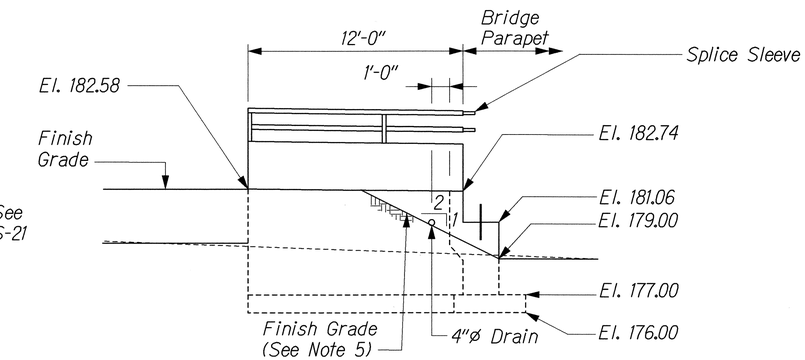

WINGWALL NO. 3 ELEVATION

Scale: ¼" = 1'-0"

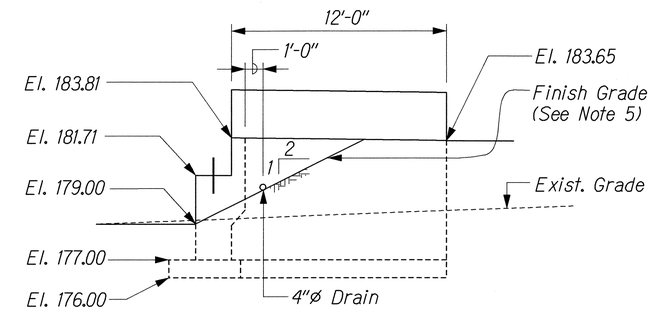

WINGWALL NO. 4 ELEVATION

Scale: ¼" = 1'-0"

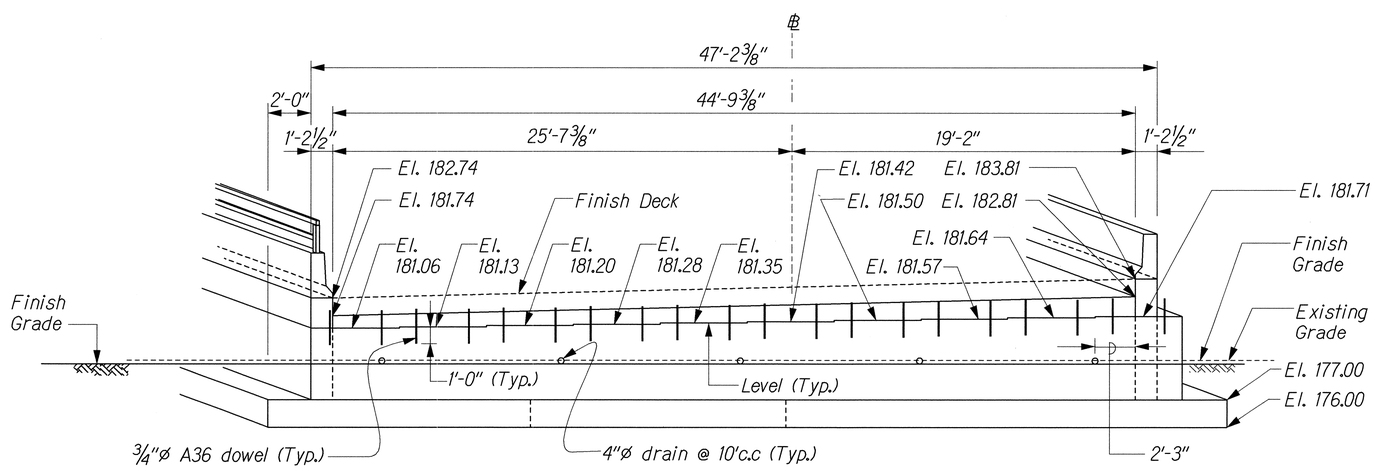

ABUTMENT NO. 2 ELEVATION

Scale: ¼" = 1'-0"

NOTES:

1. For location plan, See Sht. No. S-20.
2. For Approach Slab Details, See Sht. No. S-35.
3. The Contractor shall use rigid template to install the ¾"ø A36 dowels to the locations as shown.
4. See Note 4 on Sht. S-22.
5. See Note 7(L) on Sht. No. S-2.

ORIGINAL PLAN	SURVEY PLOTTED BY	DATE
	DRAWN BY	
	TRACED BY	
NOTE BOOK	DESIGNED BY	
	QUANTITIES BY	
No.	CHECKED BY	

J:/KUIHELANI/STRUCT/ST-DET14.dgn

HU PANG CHEN
LICENSED PROFESSIONAL ENGINEER
No. 3865-S
HAWAII, U.S.A.

THIS WORK WAS PREPARED BY ME OR UNDER MY SUPERVISION.

Hupang Chen

STATE OF HAWAII
DEPARTMENT OF TRANSPORTATION
HIGHWAYS DIVISION

WAIHEE STREAM BRIDGE

ABUTMENT SHEET 2 OF 3

KUIHELANI HIGHWAY WIDENING

HONOAPIILANI HIGHWAY TO PUUNENE AVENUE

FEDERAL-AID PROJECT NO. NH-0380(9)

Scale: As Shown Date: Sept. 14, 2001

SHEET No. S-23 OF 54 SHEETS

FED. ROAD DIST. NO.	STATE	FED. AID PROJ. NO.	FISCAL YEAR	SHEET NO.	TOTAL SHEETS
HAWAII	HAW.	NH-0380(9)	2000	186	380

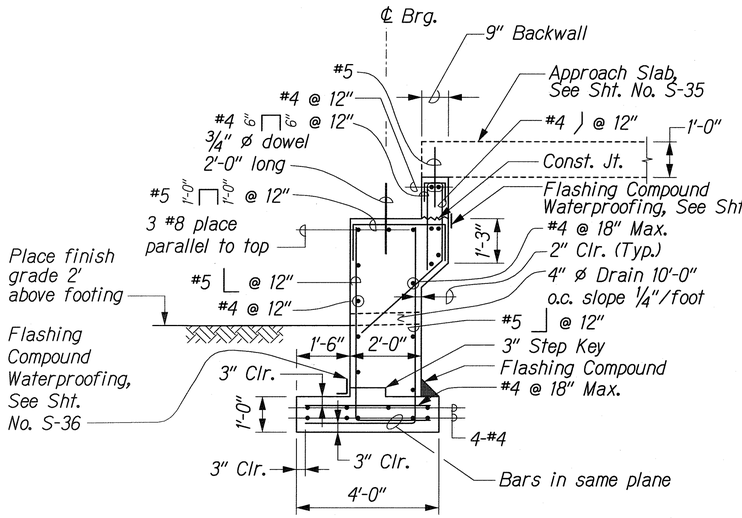

TYPICAL ABUTMENT SECTION

Scale: 1/2" = 1'-0"

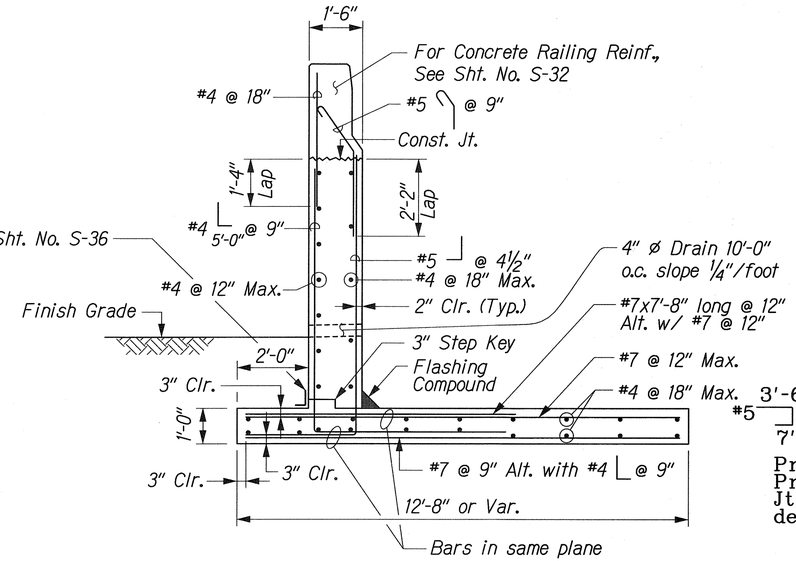

TYPICAL WINGWALL SECTION

Scale: 1/2" = 1'-0"

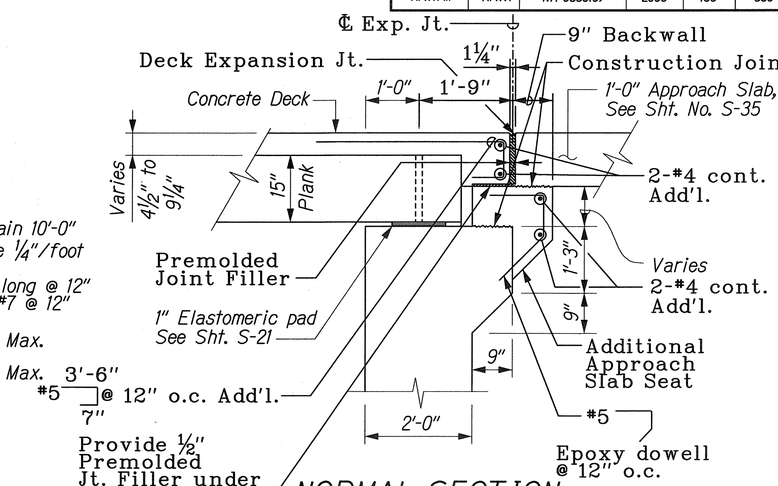

NORMAL SECTION ABUTMENT SEAT DETAIL

Scale: 3/4" = 1'-0"

LEGEND FOR AS-BUILT POSTINGS	
∿∿∿	Squiggly line for as-built deletion
~~100.00~~	Double line for as-built deletion
Roadway	Text for as-built posting

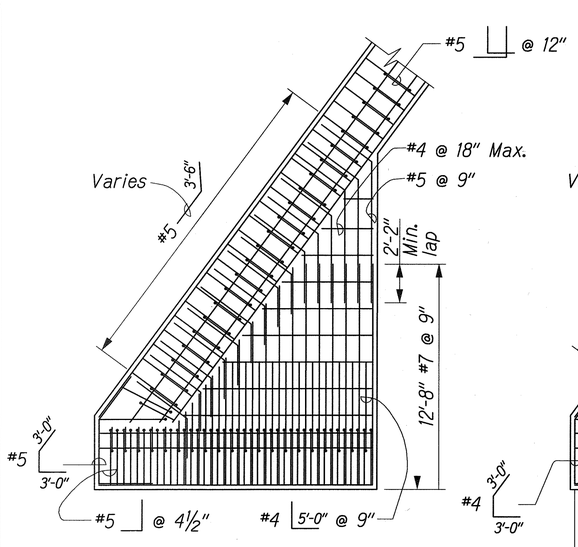

BOTTOM MAT

Scale: 1/4" = 1'-0"

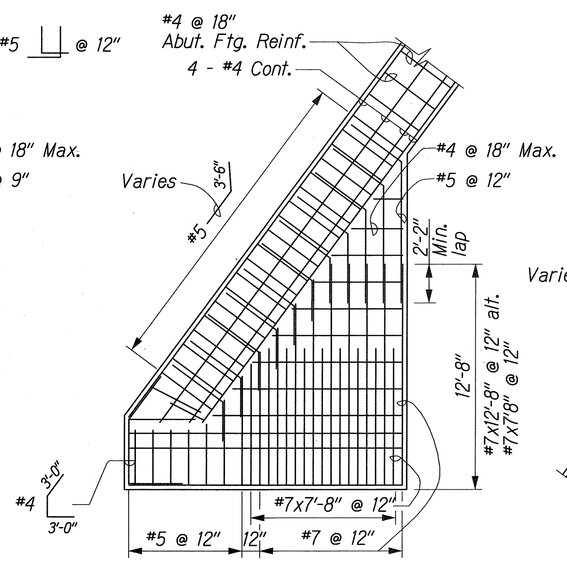

TOP MAT

Scale: 1/4" = 1'-0"

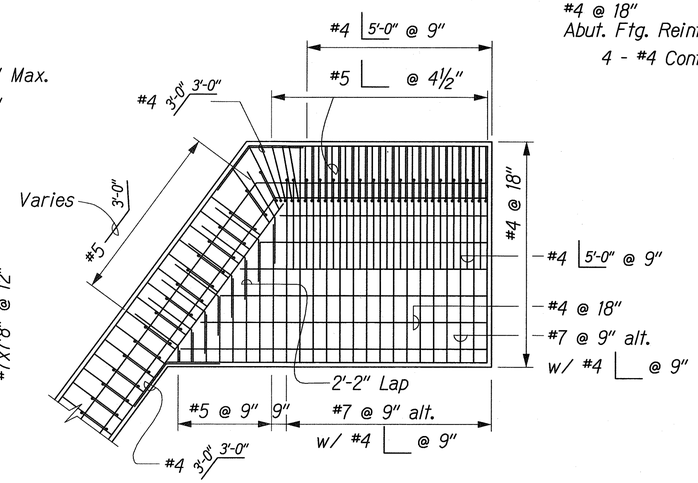

BOTTOM MAT

Scale: 1/4" = 1'-0"

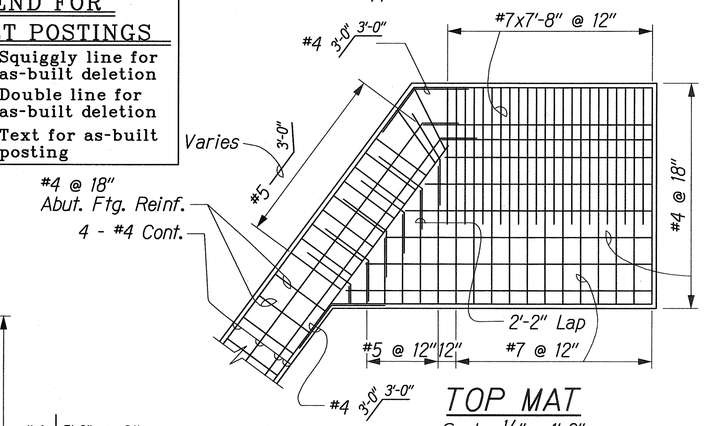

TOP MAT

Scale: 1/4" = 1'-0"

DETAIL 1
FOOTING REINFORCING PLAN

DETAIL 2
FOOTING REINFORCING PLAN

ORIGINAL PLAN	SURVEY PLOTTED BY	DATE
	DRAWN BY	
	TRACED BY	
NOTE BOOK	DESIGNED BY	
	QUANTITIES BY	
No.	CHECKED BY	

J:/KUIHELANI/STRUCT/ST-DETT.dgn

HU PANG CHEN
LICENSED PROFESSIONAL ENGINEER
No. 3865-S
HAWAII, U.S.A.

THIS WORK WAS PREPARED BY ME OR UNDER MY SUPERVISION.

STATE OF HAWAII
DEPARTMENT OF TRANSPORTATION
HIGHWAYS DIVISION

WAIHEE STREAM BRIDGE
ABUTMENT SHEET 3 OF 3

KUIHELANI HIGHWAY WIDENING
HONOAPIILANI HIGHWAY TO PUUNENE AVENUE
FEDERAL-AID PROJECT NO. NH-0380(9)

Scale: As Shown Date: Sept. 14, 2001

SHEET No. S-24 OF 54 SHEETS

"AS-BUILT"

FED. ROAD DIST. NO.	STATE	FED. AID PROJ. NO.	FISCAL YEAR	SHEET NO.	TOTAL SHEETS
HAWAII	HAW.	NH-0380(9)	2000	187	380

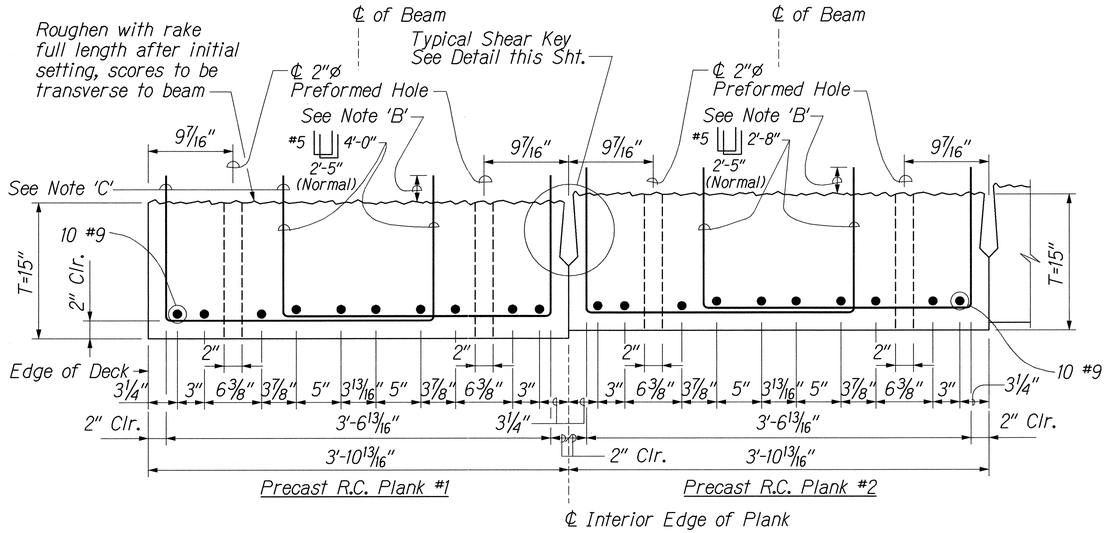

PRECAST R.C. PLANK - NORMAL CROSS SECTION

Scale: 1 1/2" = 1'-0"

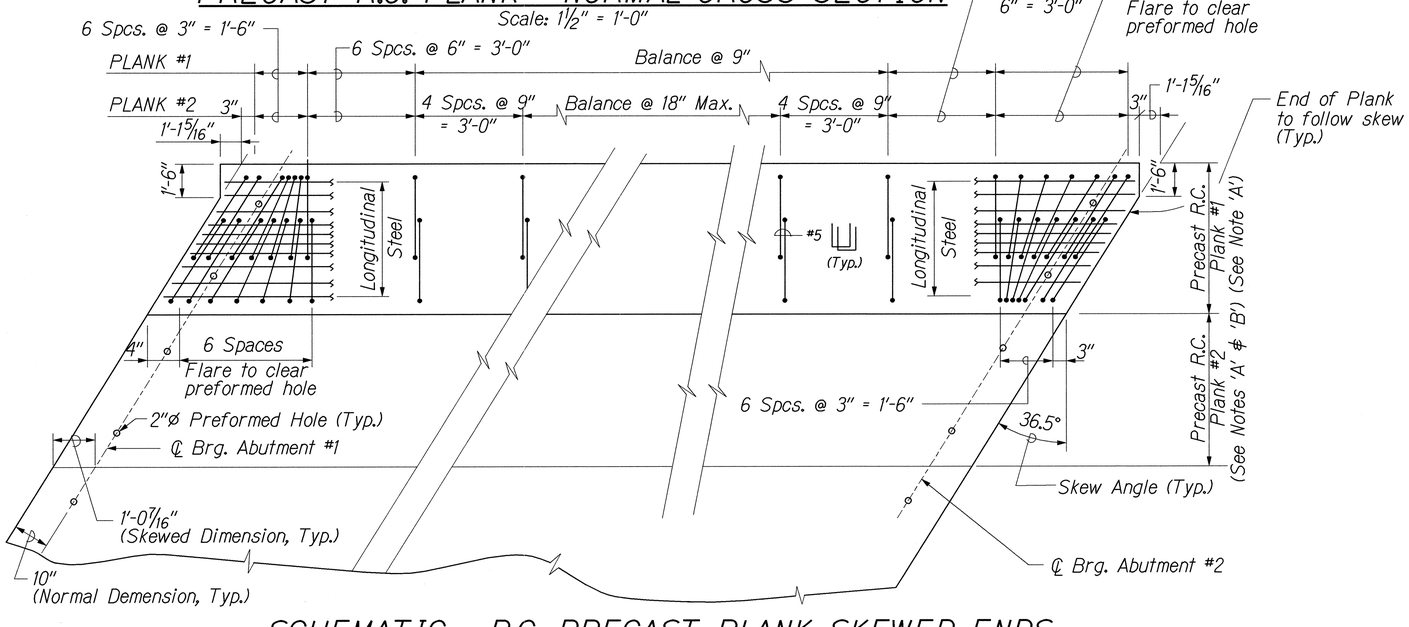

SCHEMATIC - R.C. PRECAST PLANK SKEWED ENDS

N.T.S.

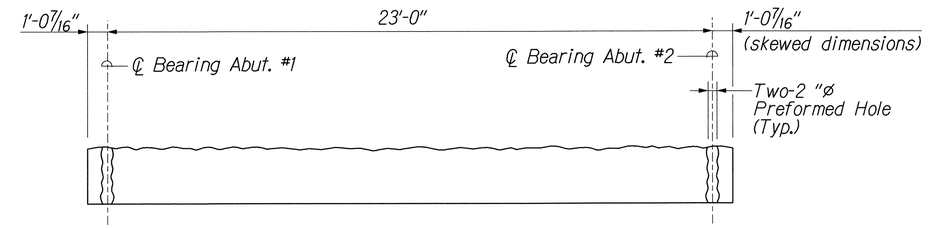

R.C. PRESCAST PLANK - LONGITUDINAL SECTION

N.T.S.

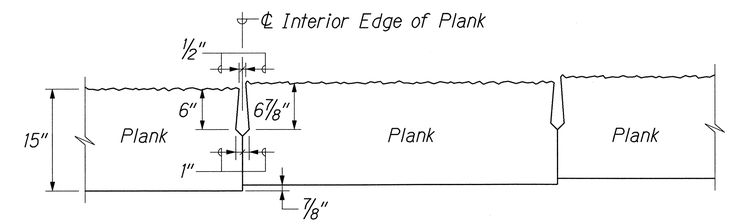

SHEAR KEY DETAIL (See Note 6)

N.T.S.

R.C. PRECAST PLANK NOTES:

1. Concrete strength for precast concrete plank shall be 5000 psi at 28 days.
2. Reinforcing steel precast plank shall be Grade 60 unless otherwise noted. For properties, see State Standard Specifications.
3. The dead load deflection includes the combined effects of the weight of the precast plank concrete, concrete topping and concrete railing. The Contractor shall provide appropriate camber to accomodate this deflection.
4. During curing, care shall be taken to avoid any lateral deflection of the beam due to improper orientation.
5. Lifting devices shall be placed as close as possible to the centerline of bearings of the plank. Details and locations of lifting devices shall be submitted to the Engineer for acceptance. Such acceptance does not relieve the Contractor of his responsibilities if beam is damaged due to the failure of the lifting device.
6. After joining all planks, place grout in the shear key prior to placing topping concrete. The grout shall have a minimum 28-day strength of 5000 psi.

NOTES:

A. Precast R.C. Plank #1 stirrup spacings are shown. Precast R.C. Plank #2 stirrup spacings are similar.

B. Bend bars in field 2" below top of deck when deck thickness is limited.

C. Extend the vertical legs of rebars of Precast R.C. Plank #1 into Concrete Railing to lap with Concrete Railing rebars as shown on Sht. No. S-32.

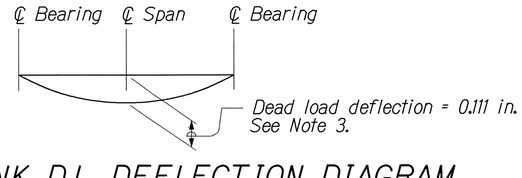

PLANK D.L. DEFLECTION DIAGRAM

N.T.S.

ORIGINAL PLAN	SURVEY PLOTTED BY	DATE
	DRAWN BY	
	TRACED BY	
NOTE BOOK	DESIGNED BY	
	QUANTITIES BY	
No.	CHECKED BY	

J:/KUIHELANI/STRUCT/BR-DET03.dgn

HUI PANG CHEN LICENSED PROFESSIONAL ENGINEER No. 3865-S HAWAII, U.S.A.

THIS WORK WAS PREPARED BY ME OR UNDER MY SUPERVISION.

Hui pang Chen

STATE OF HAWAII
DEPARTMENT OF TRANSPORTATION
HIGHWAYS DIVISION

WAIHEE DITCH BRIDGE

PRECAST R.C. PLANK DETAILS

KUIHELANI HIGHWAY WIDENING

HONOAPIILANI HIGHWAY TO PUUNENE AVENUE

FEDERAL-AID PROJECT NO. NH-0380(9)

Scale: As Shown Date: Sept. 14, 2001

SHEET No. S-25 OF 54 SHEETS

FED. ROAD DIST. NO.	STATE	FED. AID PROJ. NO.	FISCAL YEAR	SHEET NO.	TOTAL SHEETS
HAWAII	HAW.	NH-0380(9)	2000	188	380

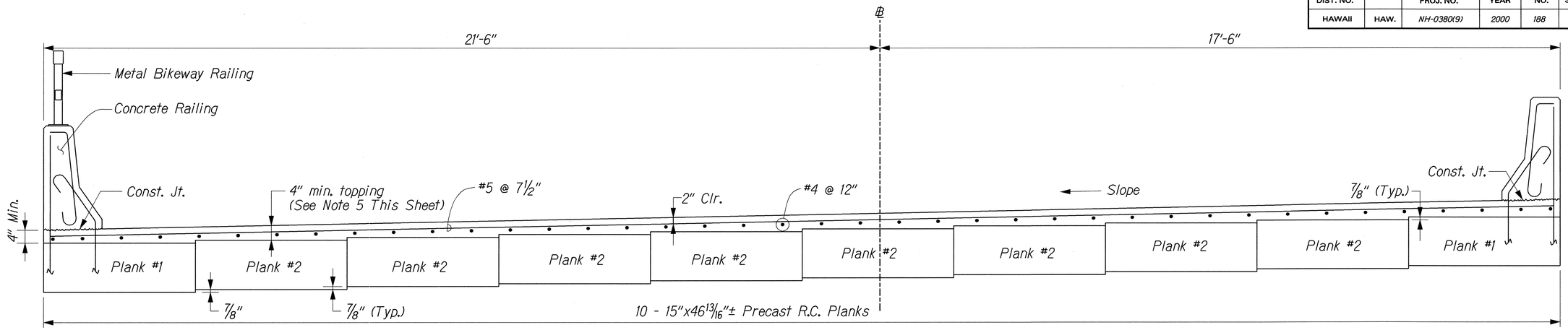

TYPICAL NORMAL DECK SECTION

Scale: 3/4" = 1'-0"

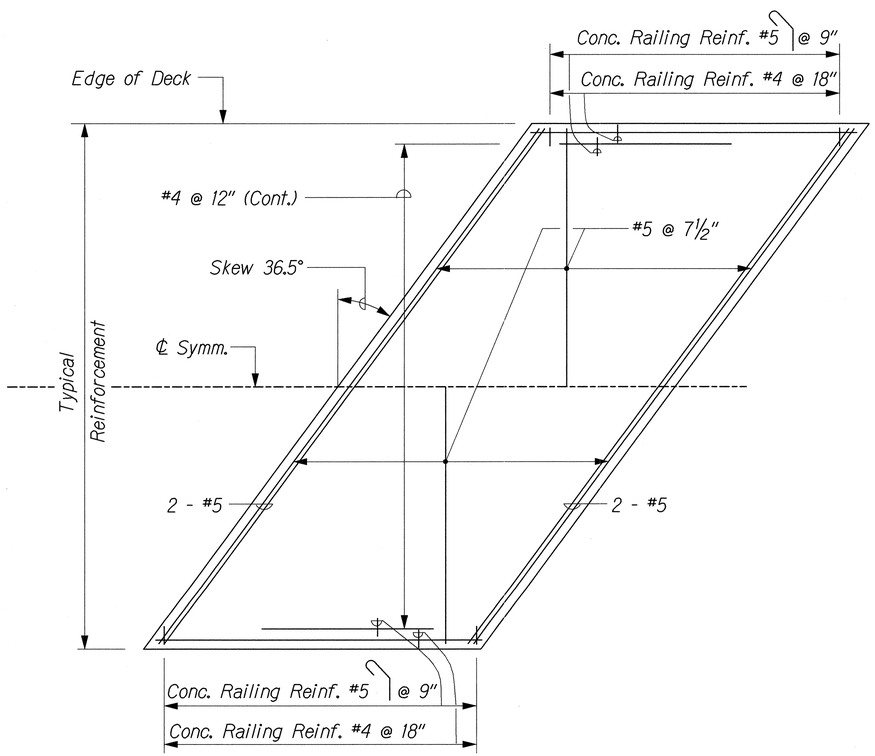

TYPICAL DECK REINF. PLAN

Scale: 3/16" = 1'-0"

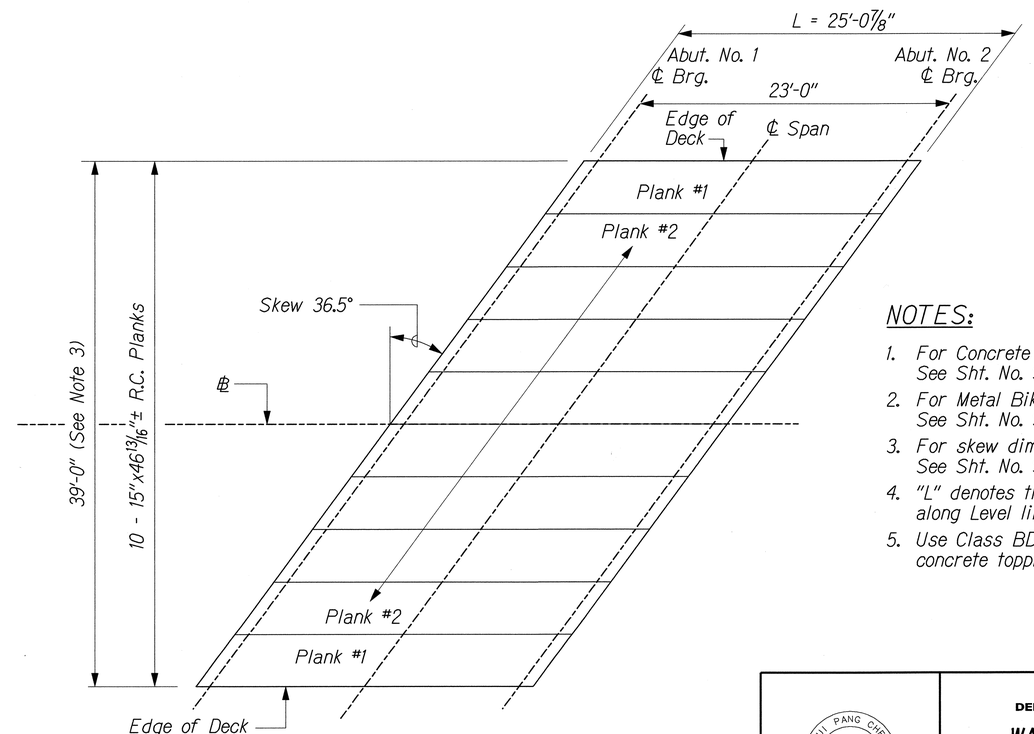

FRAMING PLAN

Scale: 3/16" = 1'-0"

NOTES:

1. For Concrete Railing Detail, See Sht. No. S-32.
2. For Metal Bikeway Railing Details, See Sht. No. S-34.
3. For skew dimensions along ℄ Brg., See Sht. No. S-22 & S-23.
4. "L" denotes the total length of plank along Level line.
5. Use Class BD concrete strength for concrete topping over planks.

ORIGINAL PLAN	SURVEY PLOTTED BY	DATE
	DRAWN BY	
	TRACED BY	
NOTE BOOK	DESIGNED BY	
	QUANTITIES BY	
No.	CHECKED BY	

J:/KUIHELANI/STRUCT/ST-DET18.dgn

HU PANG CHEN
LICENSED PROFESSIONAL ENGINEER
No. 3865-S
HAWAII, U.S.A.

THIS WORK WAS PREPARED BY ME OR UNDER MY SUPERVISION.

Hupang Chen

STATE OF HAWAII
DEPARTMENT OF TRANSPORTATION
HIGHWAYS DIVISION

WAIHEE DITCH BRIDGE

DECK REINF. & FRAMING PLAN

KUIHELANI HIGHWAY WIDENING

HONOAPIILANI HIGHWAY TO PUUNENE AVENUE

FEDERAL-AID PROJECT NO. NH-0380(9)

Scale: As Shown Date: Sept. 14, 2001

SHEET No. S-26 OF 54 SHEETS

FED. ROAD DIST. NO.	STATE	FED. AID PROJ. NO.	FISCAL YEAR	SHEET NO.	TOTAL SHEETS
HAWAII	HAW.	NH-0380(9)	2000	189	380

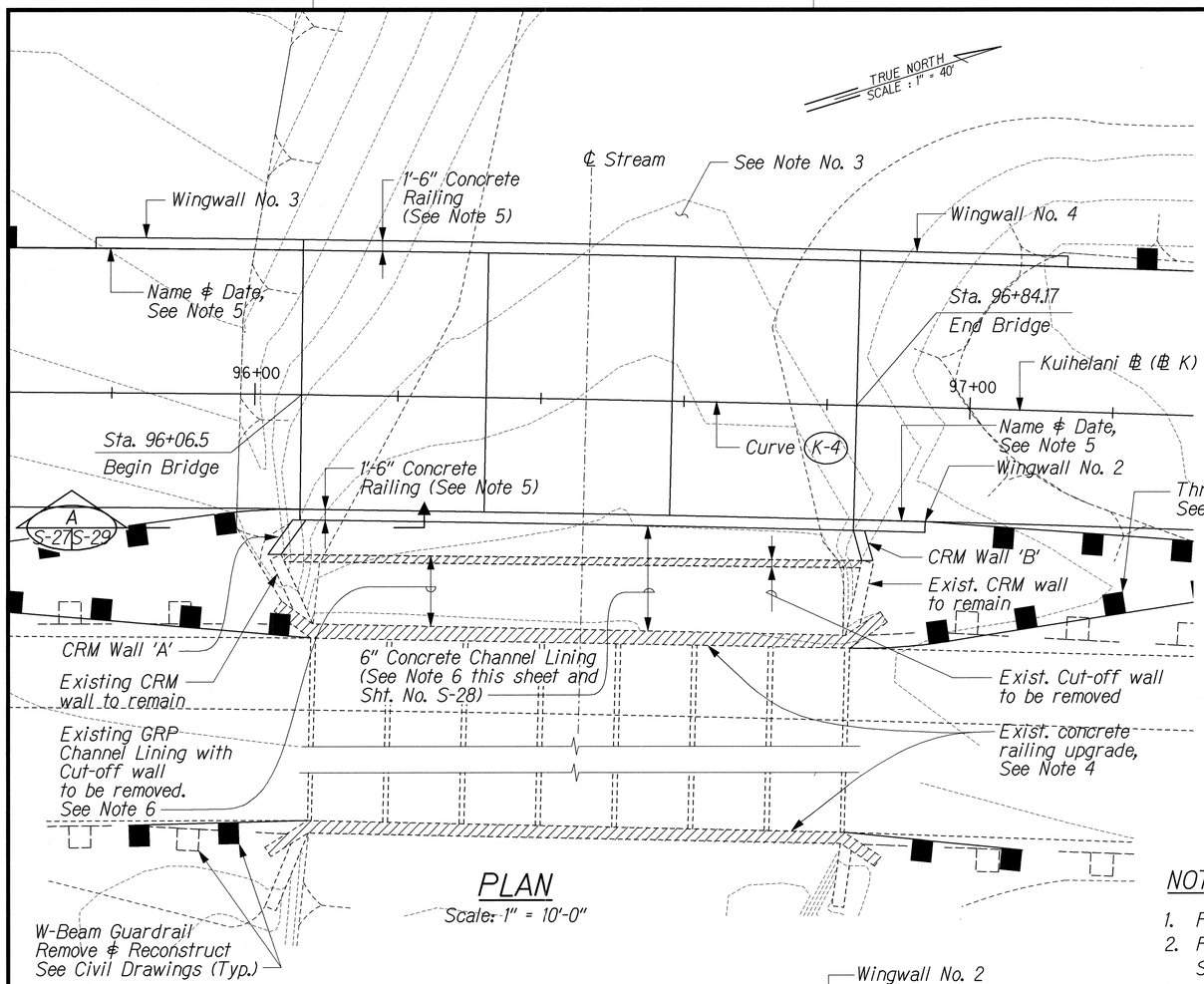

PLAN

Scale: 1" = 10'-0"

ESTIMATED QUANTITIES

ITEM NO.	ITEM	UNIT	QUANTITIES
206.	Structure Excavation for Wingwalls & CRM Walls	CY	287
206.	Structure Backfill for Wingwalls & CRM Walls	CY	231
646.	Geocomposite Drain for Wingwalls & CRM Walls	SY	34
503.	Concrete In Wingwalls (Except Footing)	LS	(26 CY)
503.	Concrete In Wingwall Footings	LS	(39 CY)
503.	Conspan Arched Culvert (Including Footing & Headwall)	LS	1
507.	Concrete Railing (Include End Post)	LF	208
507.	Metal Bikeway Railing	LF	194
507.	Upgrade of Existing Concrete Railing	LF	152
508.	Cement Rubble Masonry	LS	(44 CY)
602.	Reinforcing Steel for Wingwalls	LS	(6,330 Lbs)

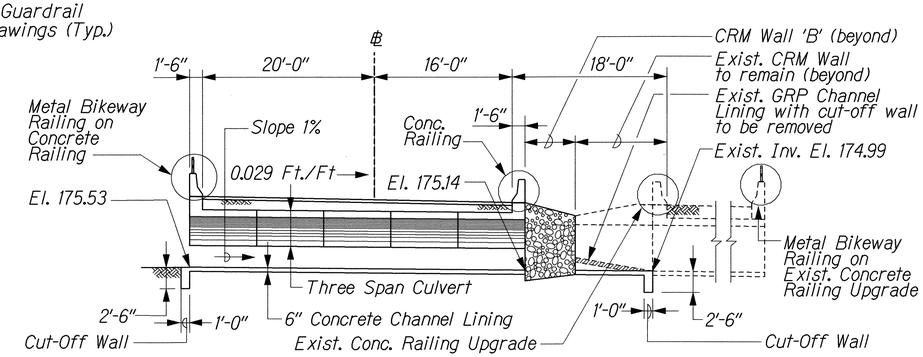

SECTION ALONG ℄ STREAM

Scale: 1/8" = 1'-0" (Looking upstation)

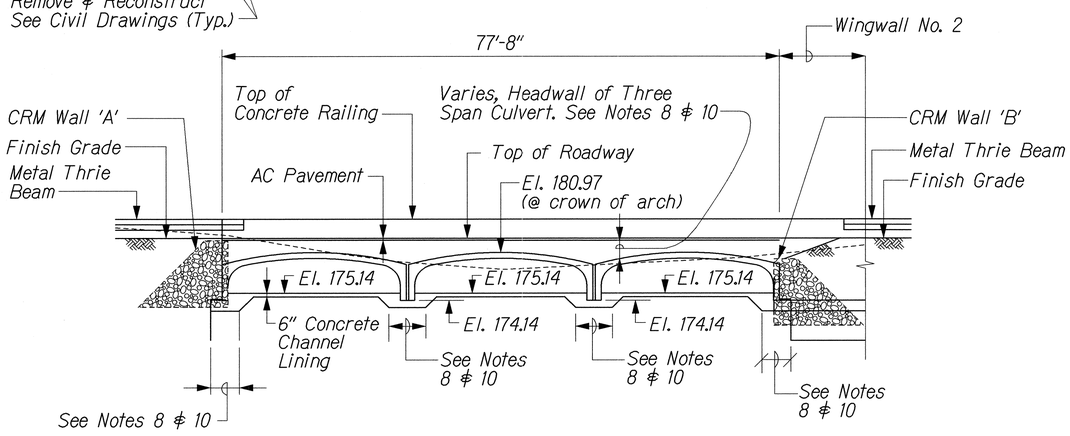

ELEVATION

Scale: 1" = 10'-0"

NOTES:

1. For General Notes, See Sheet No. S-2.
2. For Payment Limit for Three Span Culvert, See Sheet No. S-28.
3. For Grading Plan, See Civil Drawings.
4. For Existing Concete Railing Upgrade Details See Sht. S-33.
5. For Bridge Name & Date Location, Concrete Railing details, See Sht. S-32.
6. Existing GRP channel lining shall be removed for replacement of concrete channel lining. The removal of the existing GRP channel lining shall be incidental to structure excavation.
7. For Payment Limit for Wingwall, See Sht. S-29.
8. For Three Span Culvert, headwall, and footing, See Note 1 on Sht. No. S-28.
9. For Curve Data for Curve (K-4), See alignment drawing on Sht. No. A11.
10. In order to prevent undermining the Three Span Culvert Footings, the Contractor shall install wingwall footings prior to excavate the Three Span Culvert Footings.
11. For Details of CRM Walls A & B, See Sheet No. S-37.

ORIGINAL PLAN | SURVEY PLOTTED BY | DRAWN BY | TRACED BY | DESIGNED BY | QUANTITIES BY | CHECKED BY | DATE
NOTE BOOK No.

J:/KUIHELANI/STRUCT/BR-02.dgn

HUI PANG CHEN LICENSED PROFESSIONAL ENGINEER No. 3865-S HAWAII, U.S.A.

THIS WORK WAS PREPARED BY ME OR UNDER MY SUPERVISION.

Hui Pang Chen

STATE OF HAWAII
DEPARTMENT OF TRANSPORTATION
HIGHWAYS DIVISION

KUIHELANI THREE SPAN CULVERT
PLAN, ELEVATION & SECTION
KUIHELANI HIGHWAY WIDENING
HONOAPIILANI HIGHWAY TO PUUNENE AVENUE
FEDERAL-AID PROJECT NO. NH-0380(9)

Scale: 1"=10' Date: Sept. 14, 2001

SHEET No. S-27 OF 54 SHEETS

FED. ROAD DIST. NO.	STATE	FED. AID PROJ. NO.	FISCAL YEAR	SHEET NO.	TOTAL SHEETS
HAWAII	HAW.	NH-0380(9)	2000	190	380

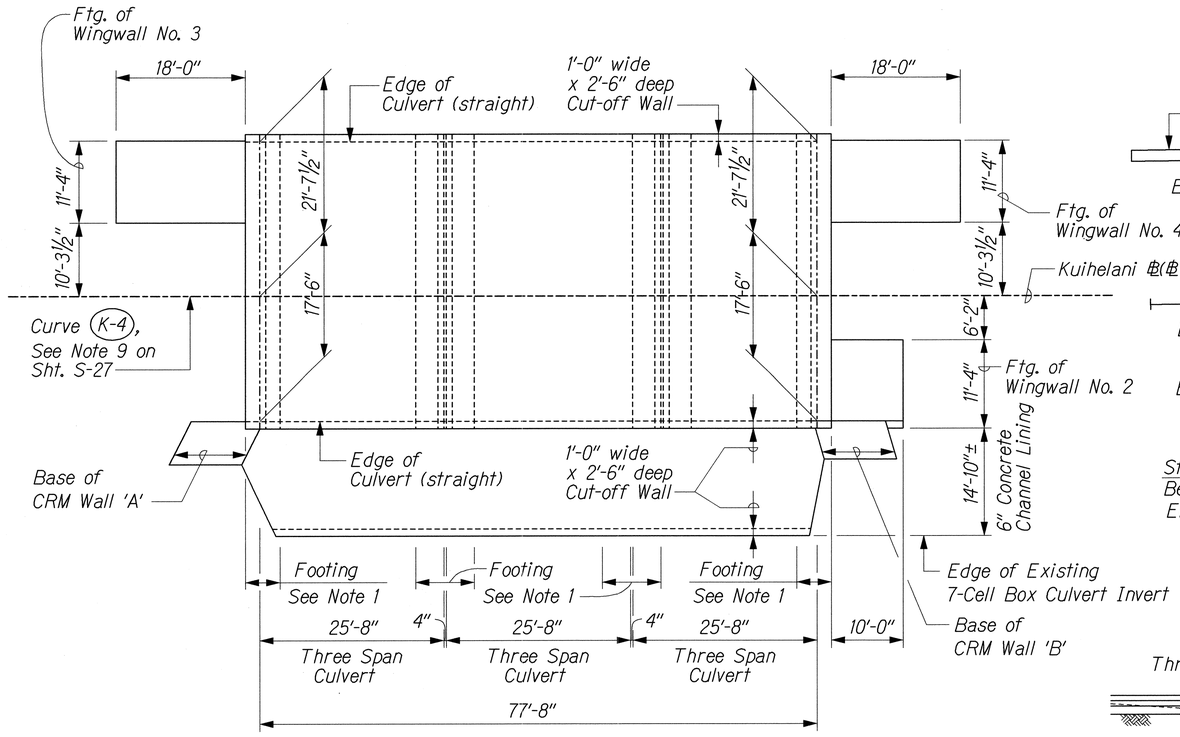

FOUNDATION PLAN

Scale: 1" = 10'-0"

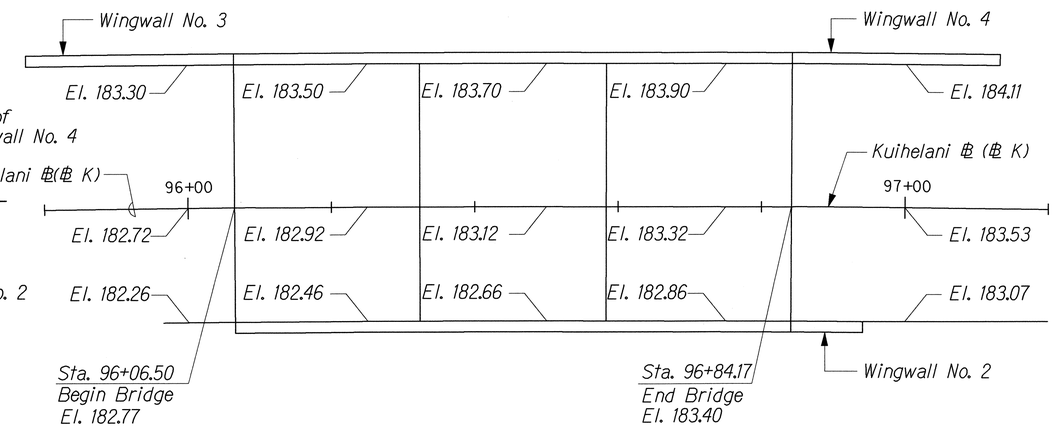

FINISH DECK ELEVATION PLAN (@ 25'-0" INTERVALS)

Scale: 1" = 10'-0"

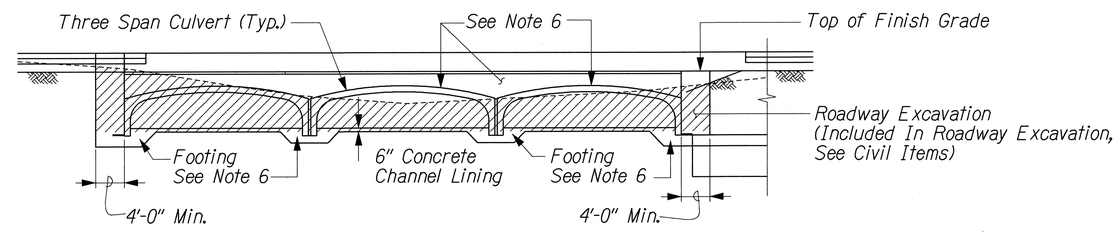

PAYMENT LIMIT FOR THREE SPAN CULVERT

Not To Scale

NOTE:

1. The Three Span Culvert and footing shall be sized according to Conspan manufacturer's recommendation based on the design criteria shown on Notes 2 thru 6 below.
2. For General Specifications, Design Specifications and Loads, See General Notes 1, 2 & 3 on Sht. No. S-2.
3. Footing Design parameters shall conform to General Note 9 (C) shown on Sht. No. S-2.
4. Design head walls to support the concrete railing resisting the dynamic Load conforming to TL-4 test level specified in General Note 3 (D) on Sht. No. S-2.
5. For reinforcing details, See Note 5 on Sht. No. S-2.
6. The payment for "Three Span Culvert" shall include Three Span Culvert units, headwalls, footings, structure excavations for footings, compacted fill material around the culvert units, structural backfill from compacted material to finish grade, No. 2 aggregate fill between units, filter fabric over joints, 6" concrete Channel Lining and incidental necessary to complete in place.
7. For installation of Three Span Culvert Footings, See Note 10 on Sht. No. S-27.

ORIGINAL PLAN	SURVEY PLOTTED BY	DATE
	DRAWN BY	
	TRACED BY	
NOTE BOOK	DESIGNED BY	
	QUANTITIES BY	
No.	CHECKED BY	

J:/KUIHELANI/STRUCT/ST-DET5.dgn

HU PANG CHEN LICENSED PROFESSIONAL ENGINEER No. 3865-S HAWAII, U.S.A.

THIS WORK WAS PREPARED BY ME OR UNDER MY SUPERVISION.

Hupang Chen

STATE OF HAWAII
DEPARTMENT OF TRANSPORTATION
HIGHWAYS DIVISION

KUIHELANI THREE SPAN CULVERT

FOUNDATION PLAN & SPOT ELEVS.

KUIHELANI HIGHWAY WIDENING

HONOAPIILANI HIGHWAY TO PUUNENE AVENUE

FEDERAL-AID PROJECT NO. NH-0380(9)

Scale: As Shown Date: Sept. 14, 2001

FED. ROAD DIST. NO.	STATE	FED. AID PROJ. NO.	FISCAL YEAR	SHEET NO.	TOTAL SHEETS
HAWAII	HAW.	NH-0380(9)	2000	C.O. 190 S-1	380

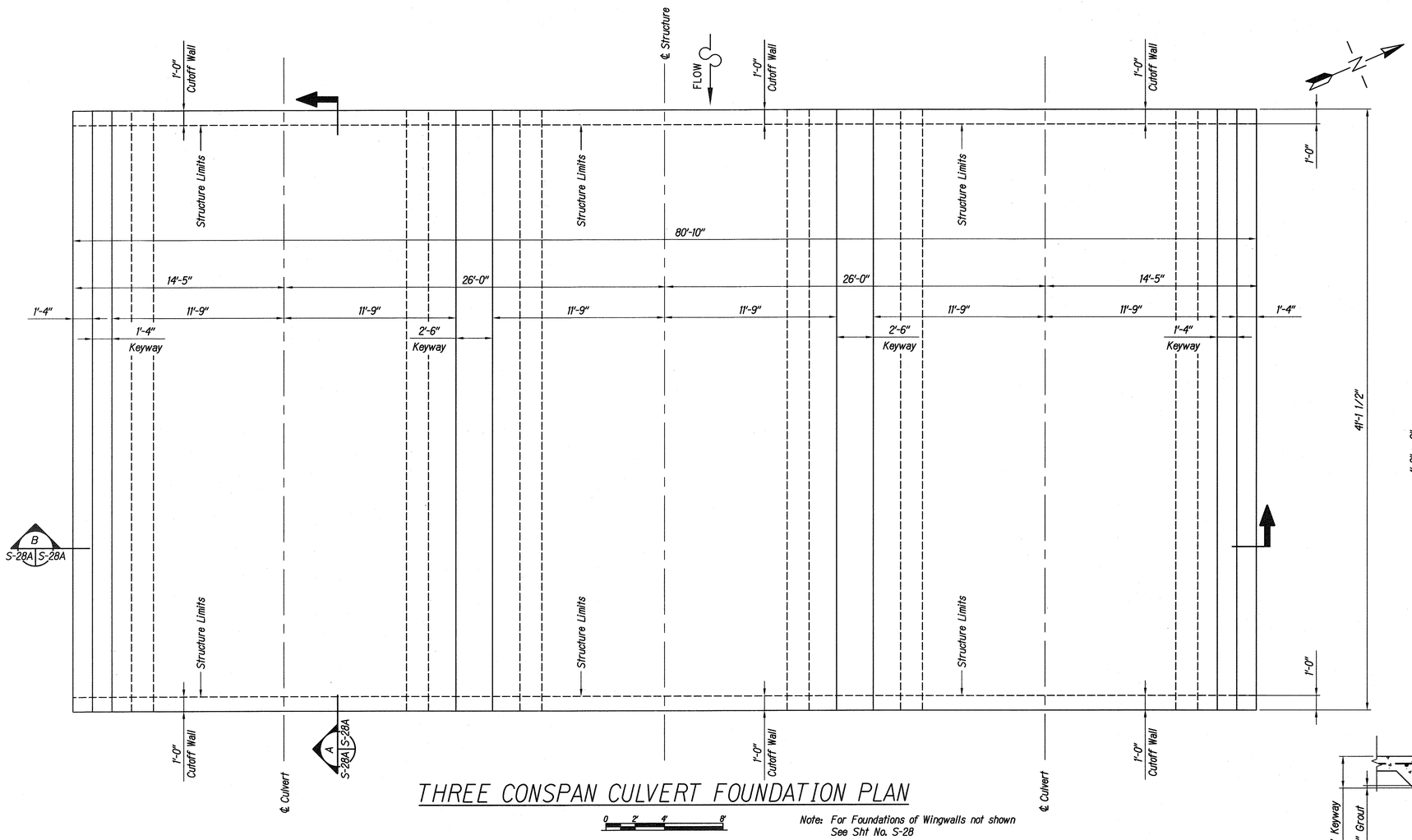

THREE CONSPAN CULVERT FOUNDATION PLAN

0 2' 4' 8'

Note: For Foundations of Wingwalls not shown See Sht No. S-28

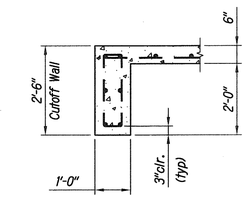

DETAIL 2 S-28A S-28A

0 1' 2' 4'

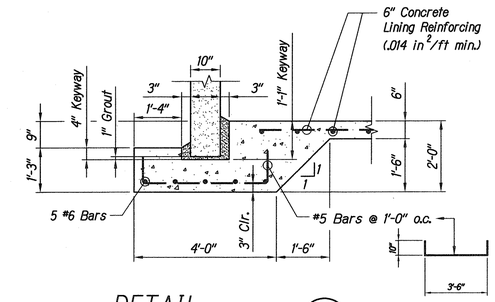

DETAIL 3 S-28A S-28A

0 1' 2' 4'

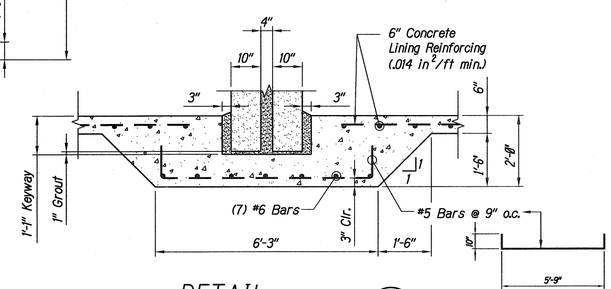

DETAIL 4 S-28A S-28A

0 1' 2' 4'

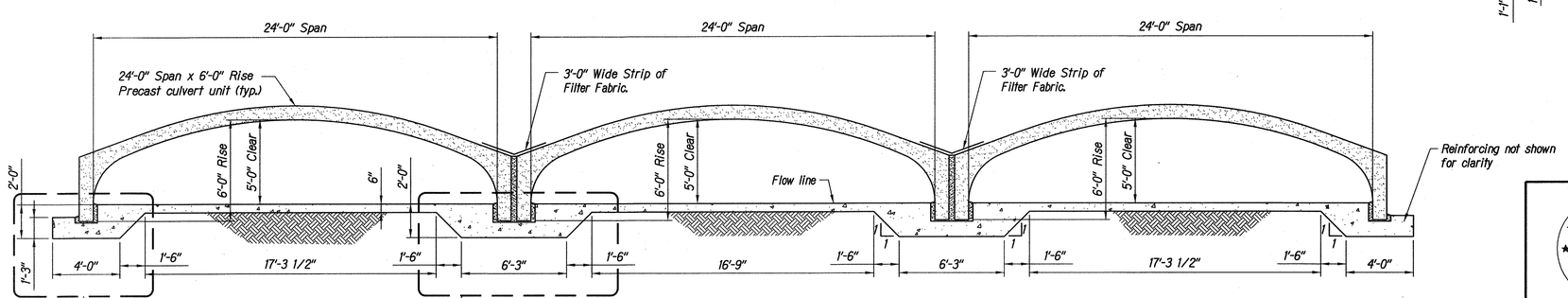

SECTION B S-28A S-28A

0 2' 4' 8'

4/30/02	Added This Sheet	
Date	Revision	

HUI PANG CHEN LICENSED PROFESSIONAL ENGINEER No. 3865-S HAWAII, U.S.A.

THIS WORK WAS PREPARED BY ME OR UNDER MY SUPERVISION.

STATE OF HAWAII
DEPARTMENT OF TRANSPORTATION
HIGHWAYS DIVISION

KUIHELANI THREE SPAN CULVERT FOUNDATION PLAN

KUIHELANI HIGHWAY WIDENING
HONOAPIILANI HIGHWAY TO PUUNENE AVENUE
FEDERAL-AID PROJECT NO. NH-0380(9)

Scale: As Shown — Date: Apr. 30, 2002

ORIGINAL PLAN	SURVEY PLOTTED BY	DATE
	DRAWN BY	
NOTE BOOK	TRACED BY	
	DESIGNED BY	
	QUANTITIES BY	
No.	CHECKED BY	

SHEET No. S-28A OF 54 SHEETS

C.O. 190 S-1

FED. ROAD DIST. NO.	STATE	FED. AID PROJ. NO.	FISCAL YEAR	SHEET NO.	TOTAL SHEETS
HAWAII	HAW.	NH-0380(9)	2000	191	380

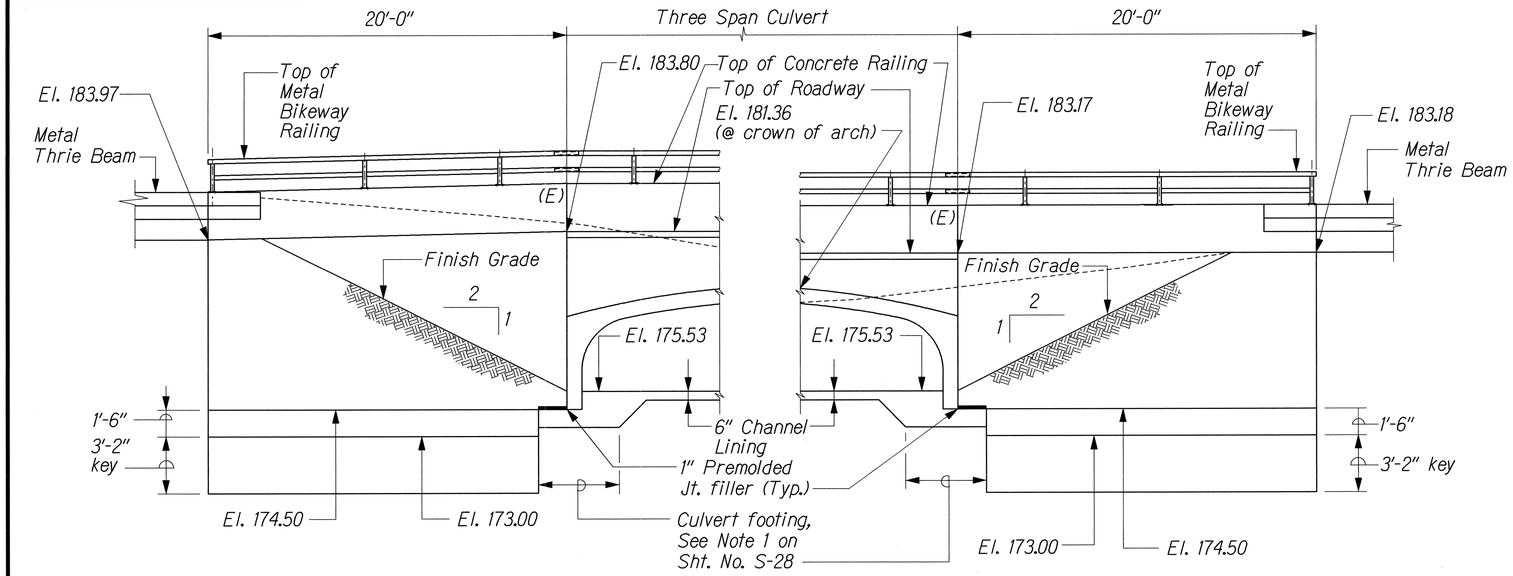

WINGWALL NO. 4 ELEVATION

Scale: 1/4" = 1'-0"

WINGWALL NO. 3 ELEVATION

Scale: 1/4" = 1'-0"

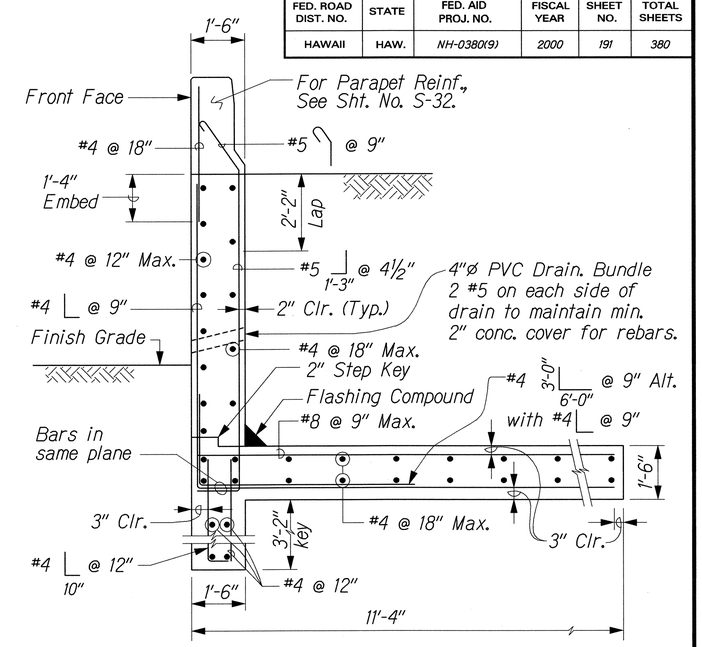

TYPICAL WINGWALL SECTION

Scale: 1/2" = 1'-0"

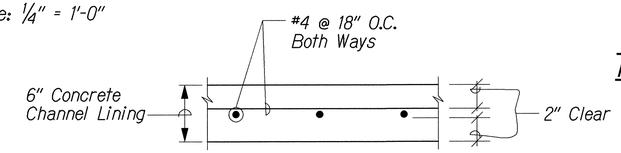

CONCRETE CHANNEL LINING DETAIL

Not To Scale

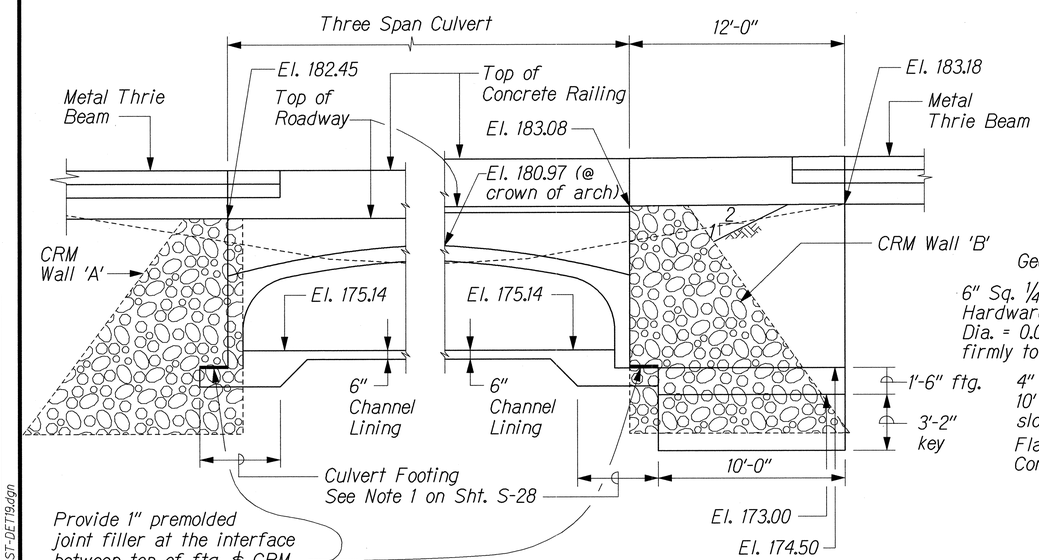

WINGWALL NO. 2 ELEVATION

Scale: 1/4" = 1'-0"

SECTION A

Scale: 1/4" = 1'-0"

S-27 | S-29

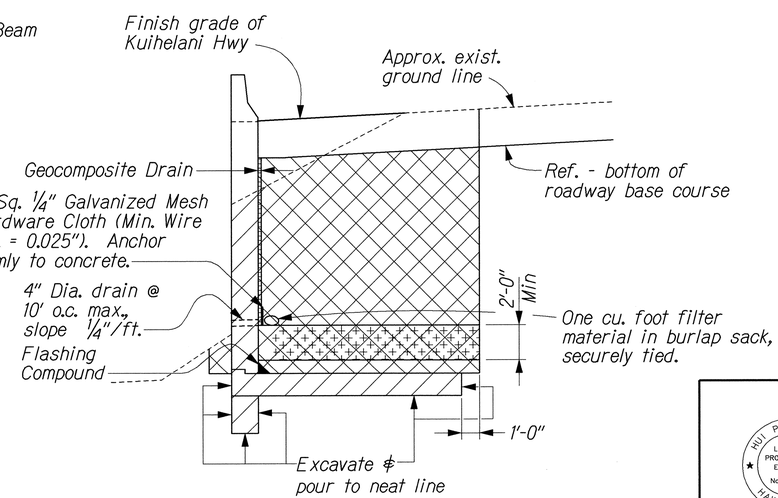

PAYMENT LIMIT FOR WINGWALL

Not To Scale

LEGEND

- Structure Excavation
- Filter Material
- Structure Backfill
- Impervious material to be incidental to structure backfill

NOTE:

1. See Notes 1 & 2 on Sht. No. S-30.
2. See Note 7(L) on Sht. No. S-2.

ORIGINAL PLAN | SURVEY PLOTTED BY | DRAWN BY | TRACED BY | DESIGNED BY | QUANTITIES BY | CHECKED BY | DATE | NOTE BOOK | No.

J:/KUIHELANI/STRUCT/ST-DET19.dgn

HU PANG CHEN LICENSED PROFESSIONAL ENGINEER No. 3865-S HAWAII, U.S.A.

THIS WORK WAS PREPARED BY ME OR UNDER MY SUPERVISION.

Hupang Chen

STATE OF HAWAII
DEPARTMENT OF TRANSPORTATION
HIGHWAYS DIVISION

KUIHELANI THREE SPAN CULVERT

WINGWALL DETAILS

KUIHELANI HIGHWAY WIDENING
HONOAPIILANI HIGHWAY TO PUUNENE AVENUE
FEDERAL-AID PROJECT NO. NH-0380(9)

Scale: As Shown Date: Sept. 14, 2001

SHEET No. S-29 OF 54 SHEETS

FED. ROAD DIST. NO.	STATE	FED. AID PROJ. NO.	FISCAL YEAR	SHEET NO.	TOTAL SHEETS
HAWAII	HAW.	NH-0380(9)	2000	192	380

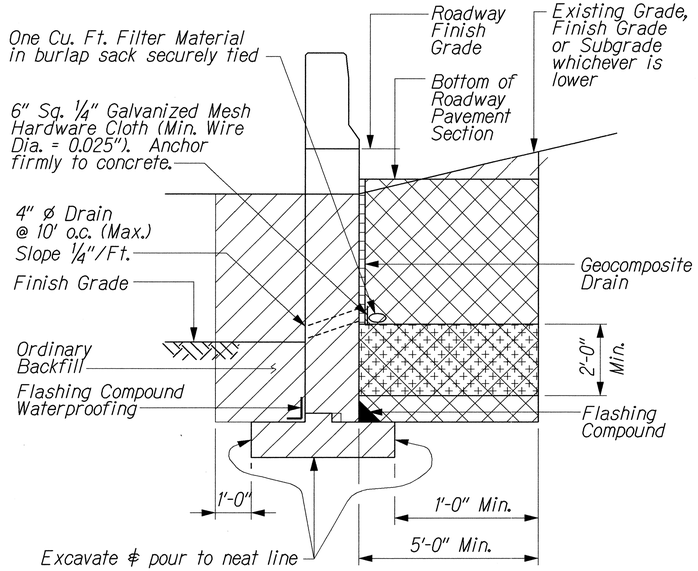

RETAINING WALL OR WINGWALL

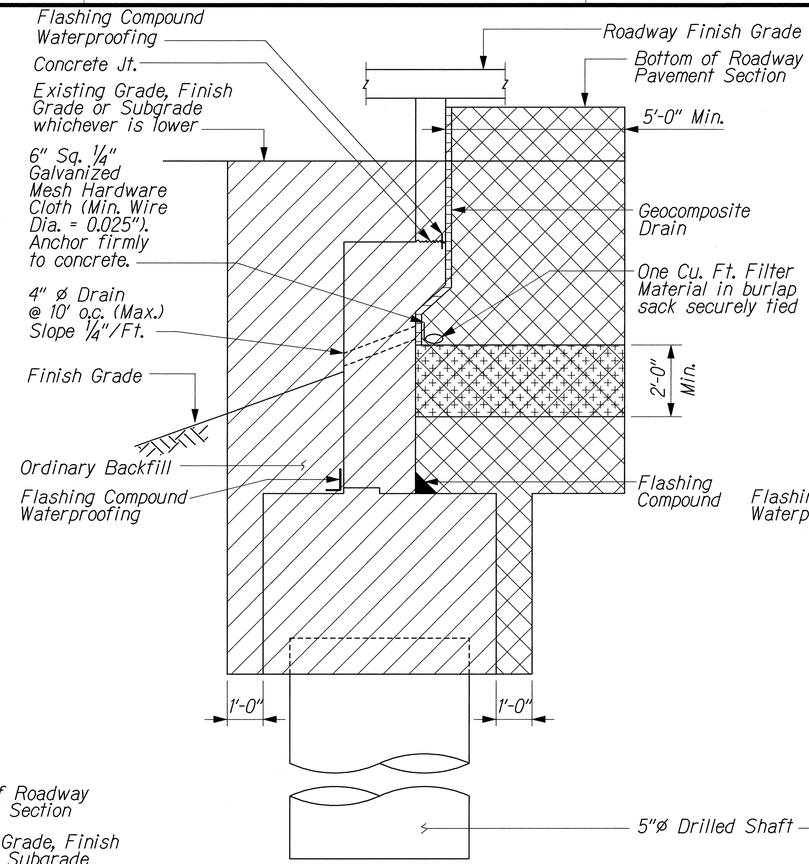

ABUTMENT SECTION ON DRILLED SHAFT

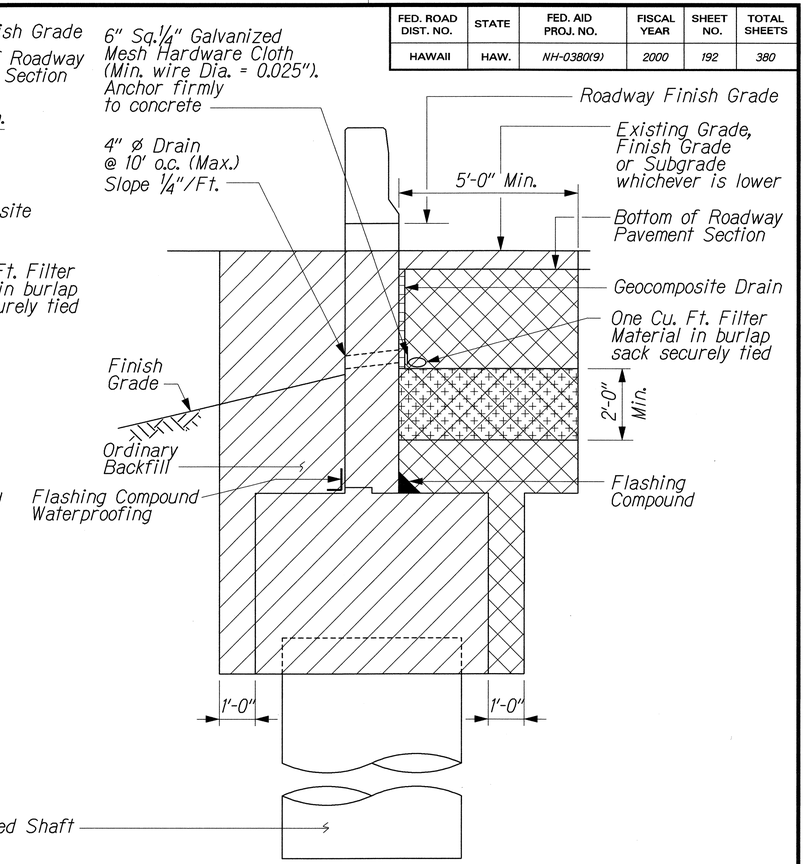

WINGWALL SECTION ON DRILLED SHAFT

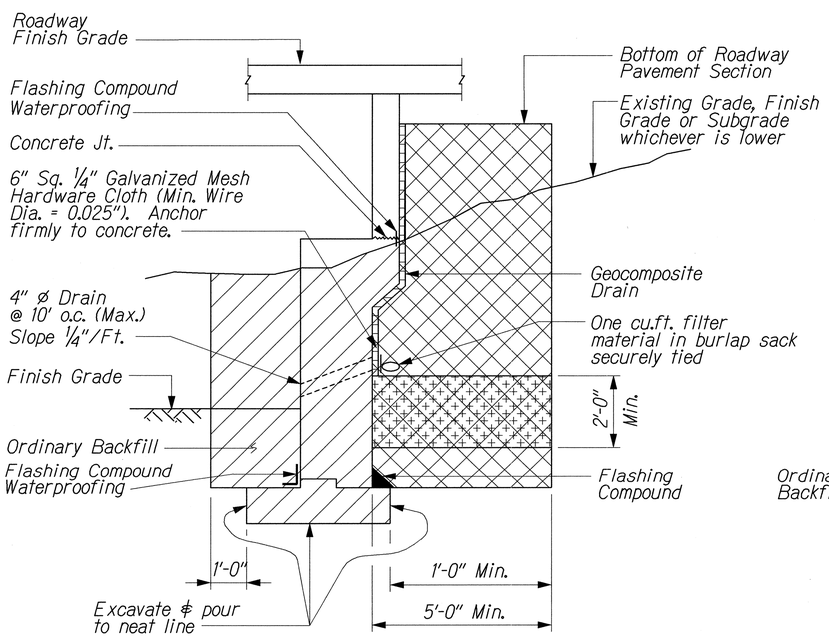

ABUTMENT ON SPREAD FOOTING

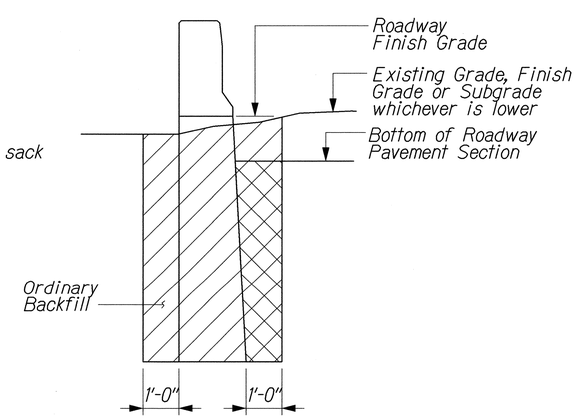

CANTILEVERED WINGWALL SECTION

LEGEND:

- Structure Excavation
- Structure Backfill
- Impervious Material to be incidental to structure

NOTES:

1. The one cubic foot filter material in burlap sack and the 6" sq. ¼" galv. mesh hardware cloth and 4" ø drain shall be incidental to Geocomposite Drain and will not be paid for separately.
2. For Flashing Compound Waterproofing Details, See Sht. No. S-36.

HU PANG CHEN LICENSED PROFESSIONAL ENGINEER No. 3865-S HAWAII, U.S.A.

THIS WORK WAS PREPARED BY ME OR UNDER MY SUPERVISION.

Hupang Chen

STATE OF HAWAII
DEPARTMENT OF TRANSPORTATION
HIGHWAYS DIVISION

EXCAVATION AND BACKFILL
PAYMENT LIMITS
KUIHELANI HIGHWAY WIDENING
HONOAPIILANI HIGHWAY TO PUUNENE AVENUE
FEDERAL-AID PROJECT NO. NH-0380(9)

Scale: ½" = 1'-0" Date: Sept. 14, 2001

SHEET No. S-30 OF 54 SHEETS

ORIGINAL PLAN | SURVEY PLOTTED BY | DRAFTN BY | TRACED BY | DESIGNED BY | QUANTITIES BY | CHECKED BY | DATE | NOTE BOOK No.

J:/KUIHELANI/STRUCT/EXBAK-DET1.dgn

FED. ROAD DIST. NO.	STATE	FED. AID PROJ. NO.	FISCAL YEAR	SHEET NO.	TOTAL SHEETS
HAWAII	HAW.	NH-0380(9)	2000	193	380

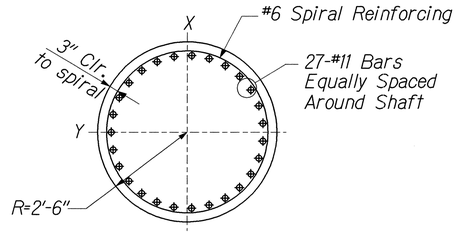

TYPE D.S. 1.5

SECTION A
Scale: 1/2" = 1'-0"

Drilled Shaft Type	S1 (ft)	S2 (ft)	S3 (ft)
5'-0" diameter Type D.S. 1.5	16'	8'	balance

Shaft Cutoff Elevations	
Bridge	Elevations
Paleaahu Stream Bridge	163.00
Waikapu Stream Bridge	180.00

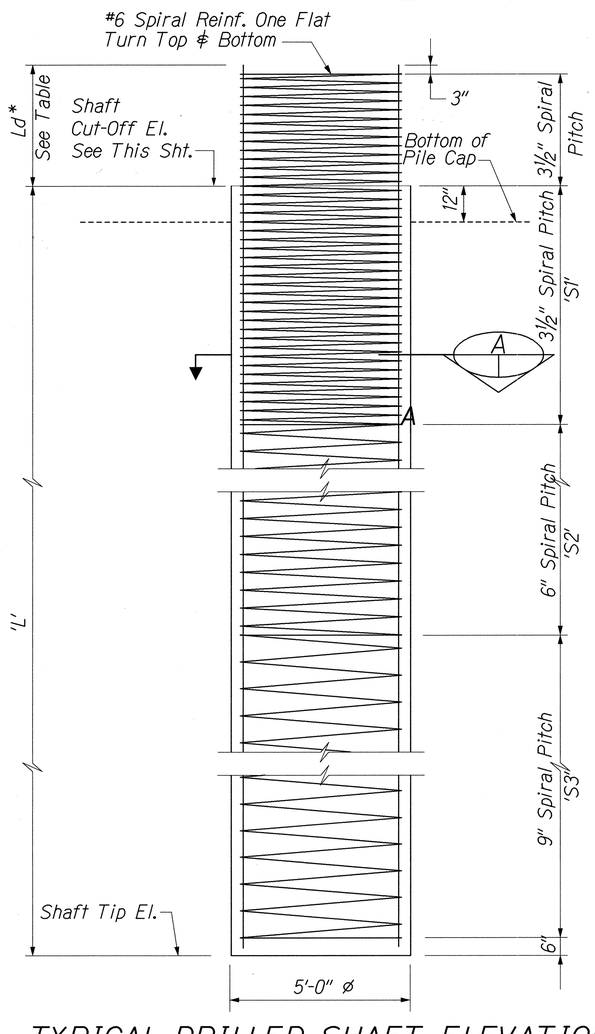

TYPICAL DRILLED SHAFT ELEVATION
Scale: 1/2" = 1'-0"

Bar	Development Length Ld - Development Length
	Single Bars
#11	3'-6"

NOTES:

1. Materials:
   A) Concrete shall be f'c = 4500 psi strength at 28 days.
   B) Reinforcing steel shall be ASTM A 615 Grade 60, unless otherwise noted.
2. Spiral Reinforcement:
   A) Lap splice length for #6 spiral reinforcement shall be 3'-0".
   B) Spiral may be discontinuous at pile cap reinforcement to allow for placing pile cap reinforcement. The discontinuous spirals shall be terminated with a 135 degree hook around the vertical reinforcement.
3. Vertical Reinforcement:
   A) Minimum vertical reinforcement at the tip of shaft shall be the cut-off reinforcement as shown.
   B) Splices:
      i) Splices in the vertical reinforcement, if required, shall be staggered so as not to occur at the same horizontal plane along the rebar cage.
      ii) No more than 1/3 of the total vertical reinforcement shall be spliced at one point.
      iii) The splice points shall be staggered at a minimum of 30 inches vertically.
4. Provide sizing hoops as a guide for fabrication of the rebar cage.
5. Provide temporary stiffeners to strengthen the rebar cage during lifting. Stiffeners shall be removed prior to concrete placement.
6. The rebar cage shall be fabricated and stored so as to avoid distortion during transportation to the job site and to avoid contamination with mud or other deleterious material.
7. For all drilled shafts, the Contractor shall control the required drilled hole size within the specified construction tolerance.
8. Provide concrete or other non-corrosive centering devices as a guide for the placement of the rebar cage in the drilled hole.
9. For slump of concrete, see Special Provisions.
10. The shaft size and reinforcement for Trial and Load Test Shafts LT-1 and LT-2 shall be the same as the production shafts as shown on this sheet. For Locations of Expandable Base Load Cell, Strain Gauges, and Pressure Line to Base Load Cell, See Geotechnical Engineering Exploration Report. Prior to installations of the Trial and Load Test Shafts, the Contractor shall submit the installation layout plans and testing procedures to the Engineer for review.

ORIGINAL PLAN | SURVEY PLOTTED BY | DRAWN BY | TRACED BY | DESIGNED BY | QUANTITIES BY | CHECKED BY | DATE | NOTE BOOK No.

J:/KUIHELANI/STRUCT/BR-DET02.dgn

HU PANG CHEN LICENSED PROFESSIONAL ENGINEER No. 3865-S HAWAII, U.S.A.
THIS WORK WAS PREPARED BY ME OR UNDER MY SUPERVISION.
Hupang Chen

STATE OF HAWAII
DEPARTMENT OF TRANSPORTATION
HIGHWAYS DIVISION

DRILLED SHAFT DETAILS

KUIHELANI HIGHWAY WIDENING
HONOAPIILANI HIGHWAY TO PUUNENE AVENUE
FEDERAL-AID PROJECT NO. NH-0380(9)
Scale: As Shown Date: Sept. 14, 2001

FED. ROAD DIST. NO.	STATE	FED. AID PROJ. NO.	FISCAL YEAR	SHEET NO.	TOTAL SHEETS
HAWAII	HAW.	NH-0380(9)	2000	194	380

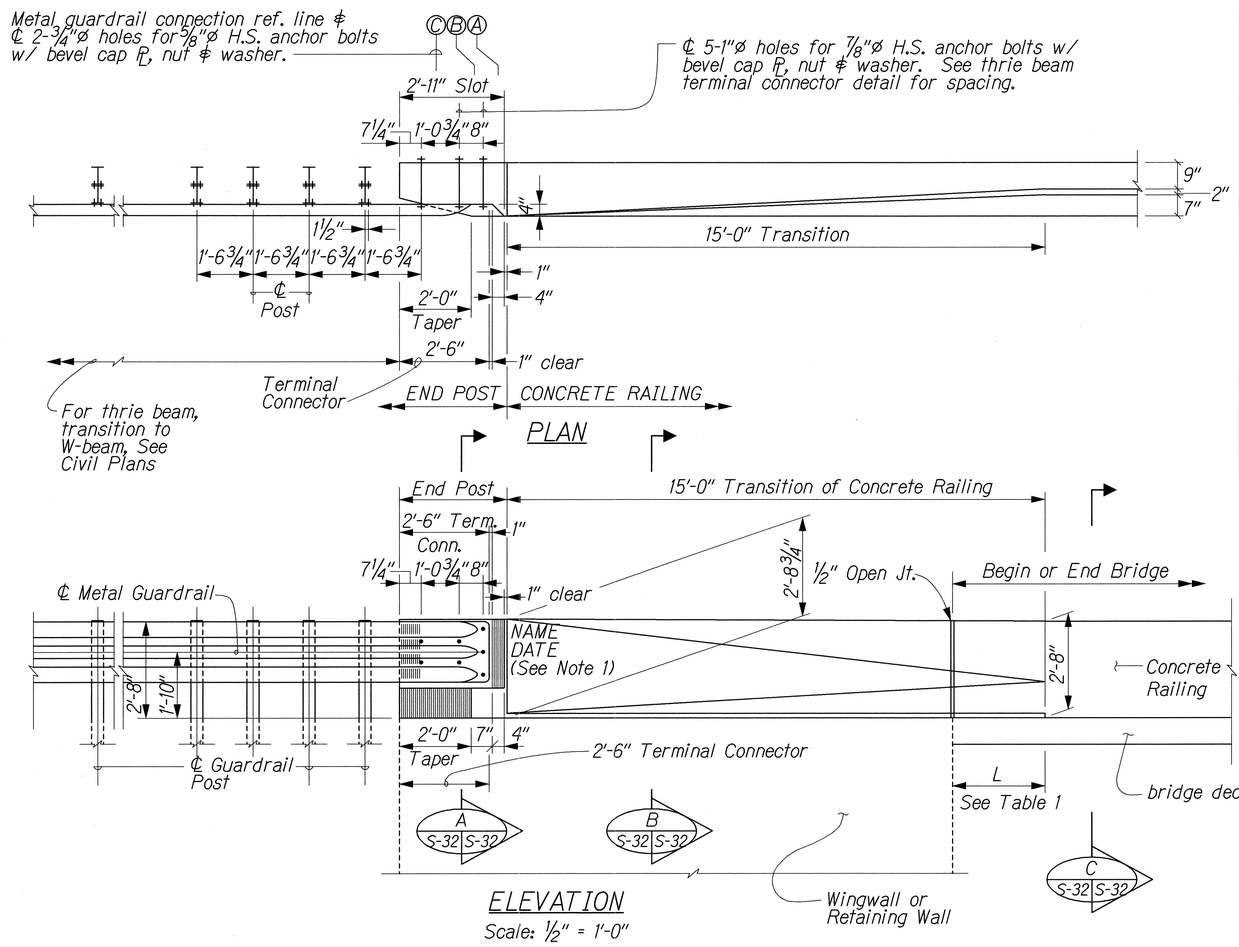

TABLE 1
Portion of Concrete Railing Transition Length On Bridge

Bridge	Locations	L
Paleaahu Stream Bridge	Wingwall No. 1	3'-0"
	Wingwall No. 2	3'-0"
	Wingwall No. 3	3'-0"
	Wingwall No. 4	3'-0"
Waikapu Stream Bridge	Wingwall No. 1	0'-0"
	Wingwall No. 2	0'-0"
	Wingwall No. 3	0'-0"
	Wingwall No. 4	0'-0"
Waihee Ditch Bridge	Wingwall No. 1	6'-0"
	Wingwall No. 2	6'-0"
	Wingwall No. 3	6'-0"
	Wingwall No. 4	6'-0"
Kuihelani Three Span Culvert	CRM Wall 'A'	18'-0"
	Wingwall No. 2	6'-0"
	Wingwall No. 3	0'-0"
	Wingwall No. 4	0'-0"

NOTE 1:

1. For Letter size and detail See Std. Plan B-01.

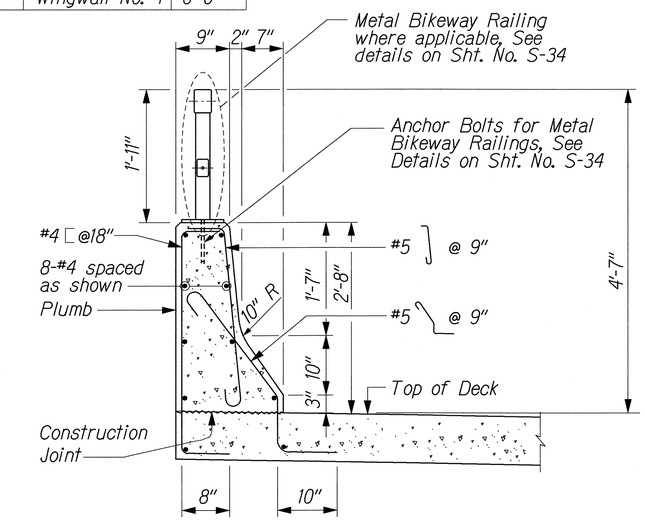

TYPICAL SECTION CONCRETE RAILING
Scale: 1" = 1'-0"

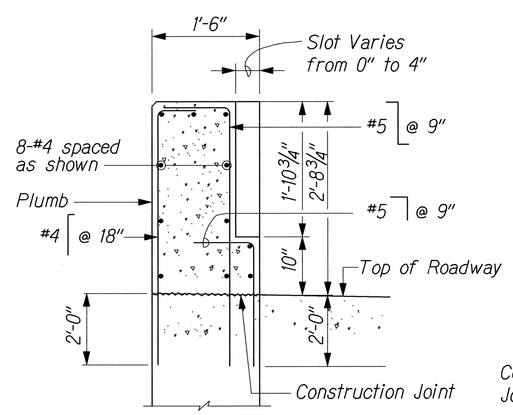

SECTION A S-32 S-32
Scale: 1" = 1'- 0"

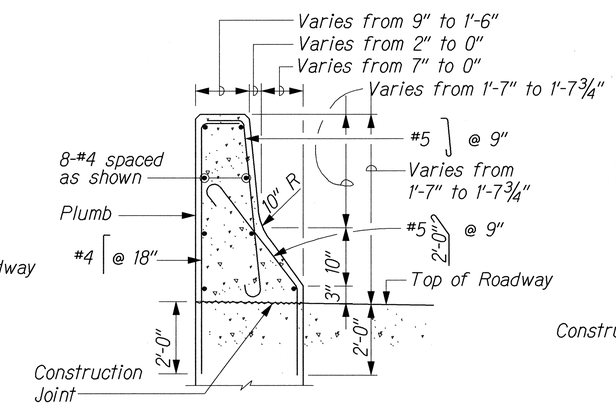

SECTION B S-32 S-32
Scale: 1" = 1'- 0"

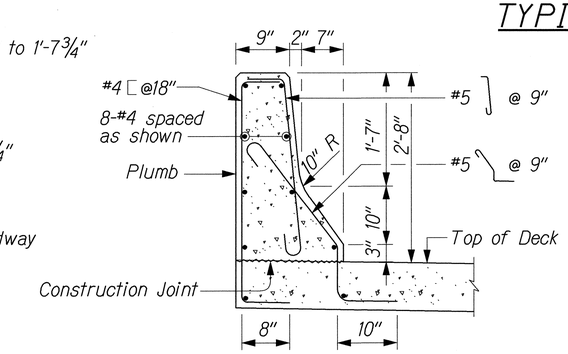

SECTION C S-32 S-32
Scale: 1" = 1'- 0"

HUI PANG CHEN
LICENSED PROFESSIONAL ENGINEER
No. 3865-S
HAWAII, U.S.A.

THIS WORK WAS PREPARED BY ME OR UNDER MY SUPERVISION.

Huipang Chen

STATE OF HAWAII
DEPARTMENT OF TRANSPORTATION
HIGHWAYS DIVISION

CONCRETE RAILING DETAILS

KUIHELANI HIGHWAY WIDENING
HONOAPIILANI HIGHWAY TO PUUNENE AVENUE
FEDERAL-AID PROJECT NO. NH-0380(9)

Scale: As Shown Date: Sept. 14, 2001

SHEET No. S-32 OF 194 SHEETS

ORIGINAL PLAN | SURVEY PLOTTED BY | DRAWN BY | TRACED BY | DESIGNED BY | QUANTITIES BY | CHECKED BY | DATE | NOTE BOOK | No.

J:/KUIHELANI/STRUCT/ST-DET24.dgn

FED. ROAD DIST. NO.	STATE	FED. AID PROJ. NO.	FISCAL YEAR	SHEET NO.	TOTAL SHEETS
HAWAII	HAW.	NH-0380(9)	2000	195	380

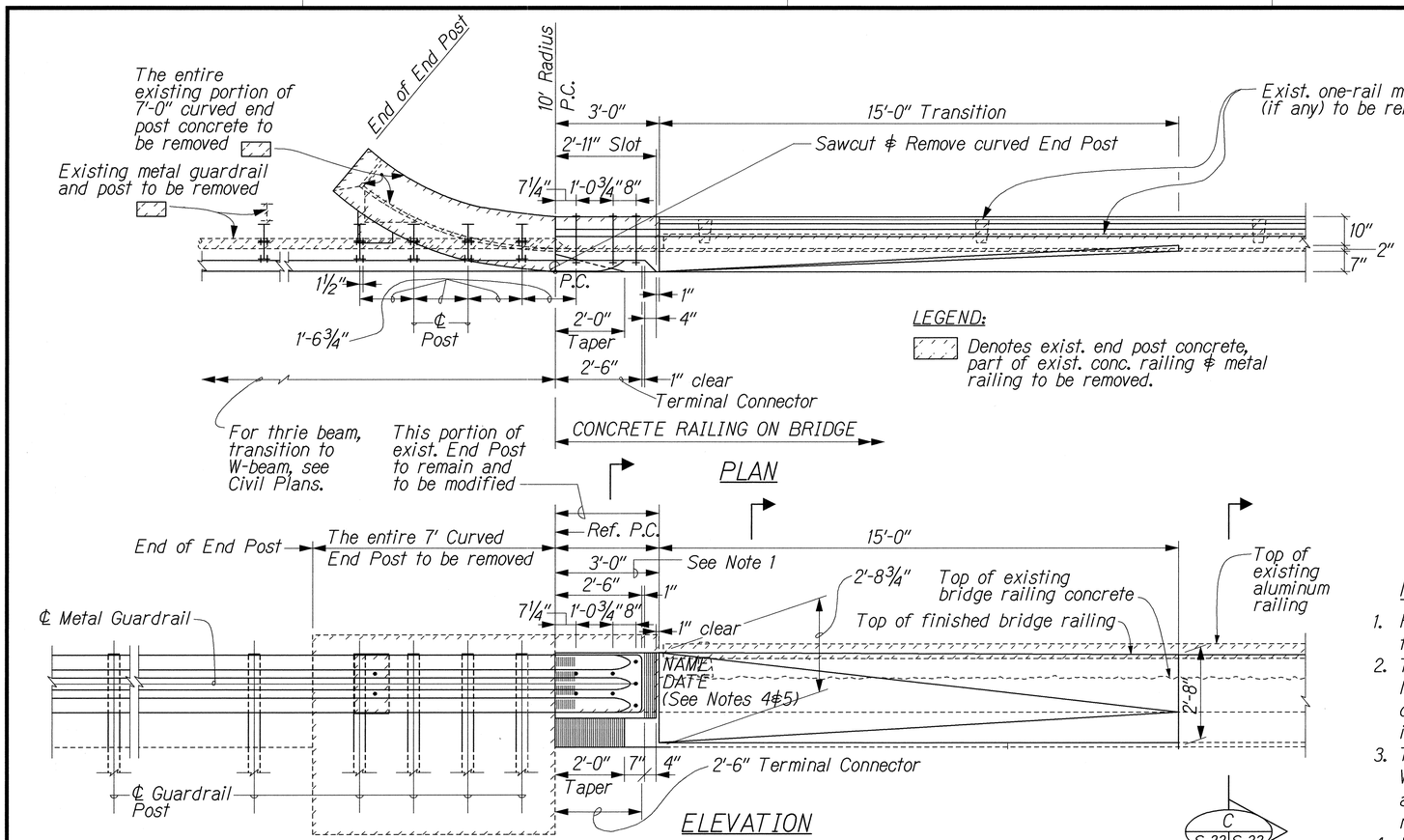

PLAN

ELEVATION

Scale: ½" = 1'-0"

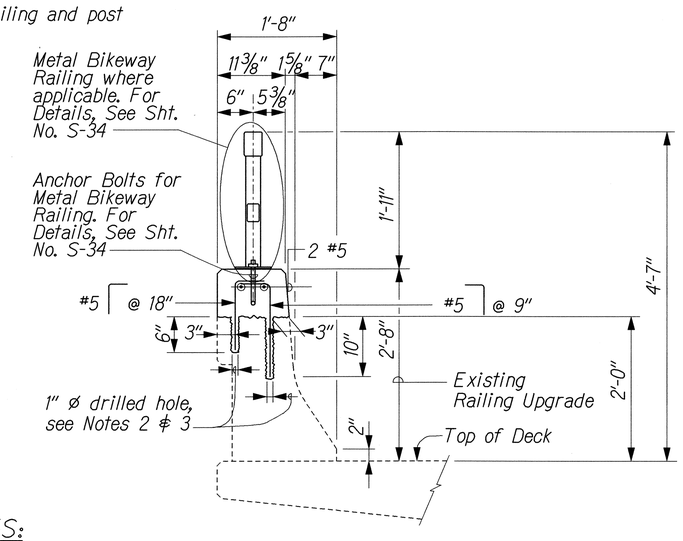

NOTES:

1. Remove the existing end post concrete as shown. The exposed rebars shall be cut to the dimension shown and bent into finished concrete.
2. The interface between new and old concrete shall be roughened, cleaned and free of laitance. Drill hole ⅜" larger in diameter than dowel to be inserted into existing concrete, clean the hole, fill 2/3 depth of the drilled hole with epoxy grout and insert the dowels.
3. The dowel holes shall be drilled as shown into the existing concrete surfaces. When the drill contacts any existing rebar, the hole shall be filled with epoxy grout and a replacement hole shall be drilled so that the spacing of dowels will be maintained. Contractor shall avoid cutting existing rebars.
4. Prior to removal of end post concrete, Contractor shall record the name and date of each structure. The same name and date of each structure shall be placed on the same side of the finished end post.
5. For letter size and detail of name and date of each structure, see Standard Plan B-01.
6. All concrete shall have a min. 28-day compressive strength (f'c) of 4000 psi.
7. All rebars shall be ASTM A615 Grade 60.
8. All anchor bolts shall be high strength conforming to the requirements of ASTM A325 and shall be galvanized.
9. All anchor rods shall be fully threaded rods conforming to the requirements of ASTM A449 or ASTM 307 as specified and be galvanized after fabrication.
10. All open joints in existing concrete parapet shall be maintained.

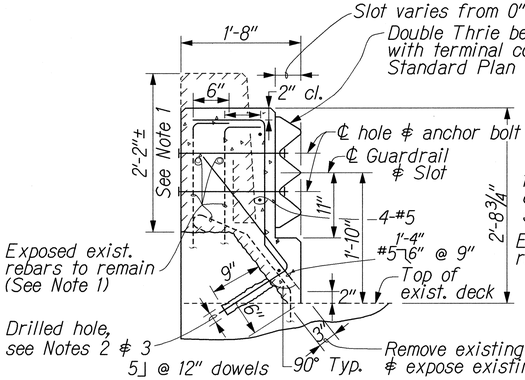

SECTION A (S-33 | S-33)

Scale: 1" = 1'- 0"

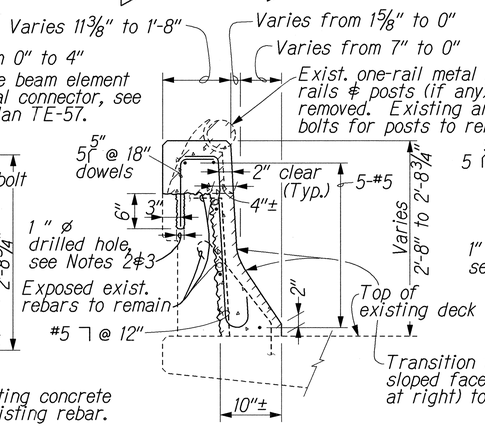

SECTION B (S-33 | S-33)

Scale: 1" = 1'- 0"

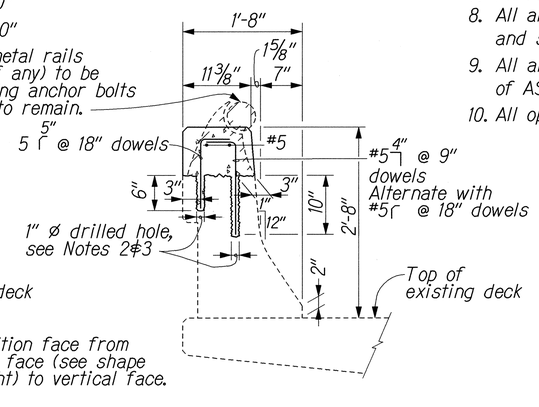

SECTION C (S-33 | S-33)

Scale: 1" = 1'- 0"

ORIGINAL PLAN	SURVEY PLOTTED BY	DATE
	DRAWN BY	
	TRACED BY	
NOTE BOOK	DESIGNED BY	
	QUANTITIES BY	
No.	CHECKED BY	

J:\KUIHELANI\STRUCT\ST-DET1.dgn

STATE OF HAWAII
DEPARTMENT OF TRANSPORTATION
HIGHWAYS DIVISION

HUI PANG CHEN
LICENSED PROFESSIONAL ENGINEER
No. 3865-S
HAWAII, U.S.A.

THIS WORK WAS PREPARED BY ME OR UNDER MY SUPERVISION.

Huipang Chen

EXISTING CONC. RAILING UPGRADE

KUIHELANI HIGHWAY WIDENING
HONOAPIILANI HIGHWAY TO PUUNENE AVENUE
FEDERAL-AID PROJECT NO. NH-0380(9)

Scale: As Shown — Date: Sept. 14, 2001

SHEET No. S-33 OF 54 SHEETS

FED. ROAD DIST. NO.	STATE	FED. AID PROJ. NO.	FISCAL YEAR	SHEET NO.	TOTAL SHEETS
HAWAII	HAW.	NH-0380(9)	2000	196	380

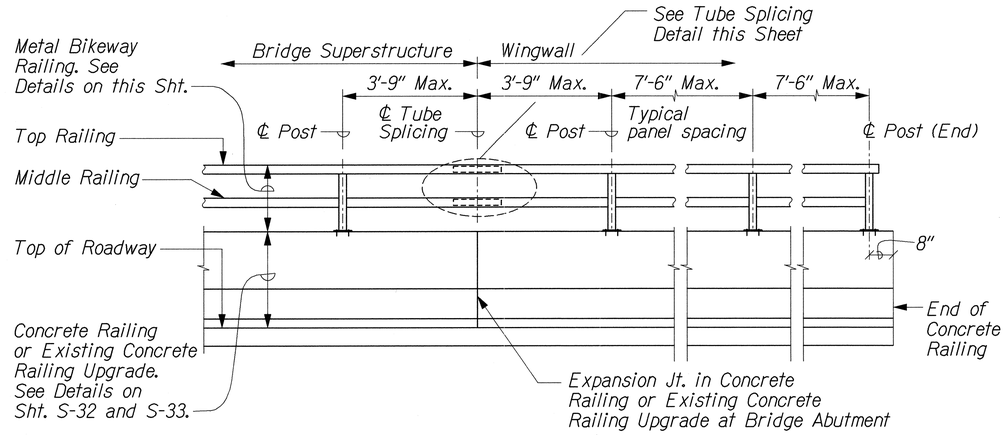

AT INTERMEDIATE AT END

PARTIAL ELEVATION

Scale: ½" = 1'-0"

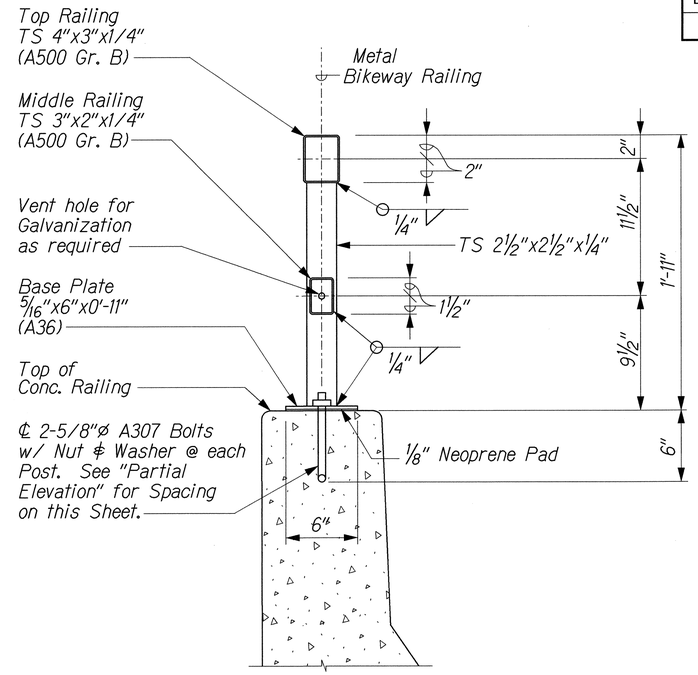

METAL BIKEWAY RAILING TYPICAL SECTION

Scale: 2" = 1'-0"

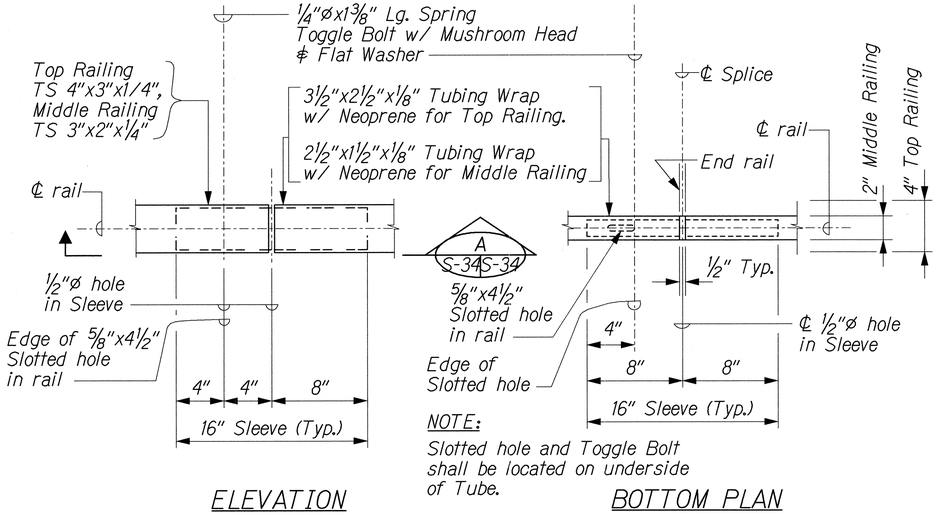

ELEVATION BOTTOM PLAN

TYPICAL TUBE SPLICING DETAIL

Not to Scale

SECTION A S-34 S-34
Not To Scale

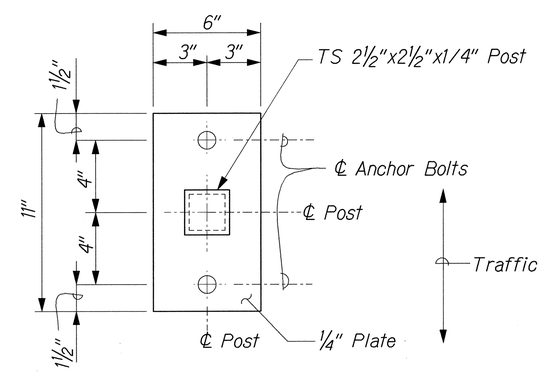

BASE PLATE DETAIL

Scale: 3" = 1'-0"

ORIGINAL PLAN	SURVEY PLOTTED BY	DATE
	DRAWN BY	
	TRACED BY	
NOTE BOOK	DESIGNED BY	
	QUANTITIES BY	
No.	CHECKED BY	

J:/KUIHELANI/STRUCT/ST-DETIA.dgn

HUI PANG CHEN LICENSED PROFESSIONAL ENGINEER No. 3865-S HAWAII, U.S.A.

THIS WORK WAS PREPARED BY ME OR UNDER MY SUPERVISION.

Huipang Chen

STATE OF HAWAII
DEPARTMENT OF TRANSPORTATION
HIGHWAYS DIVISION

METAL BIKEWAY RAILING DETAILS

KUIHELANI HIGHWAY WIDENING
HONOAPIILANI HIGHWAY TO PUUNENE AVENUE
FEDERAL-AID PROJECT NO. NH-0380(9)

Scale: As Shown Date: Sept. 14, 2001

SHEET No. S-34 OF 54 SHEETS

FED. ROAD DIST. NO.	STATE	FED. AID PROJ. NO.	FISCAL YEAR	SHEET NO.	TOTAL SHEETS
HAWAII	HAW.	NH-0380(9)	2000	197	380

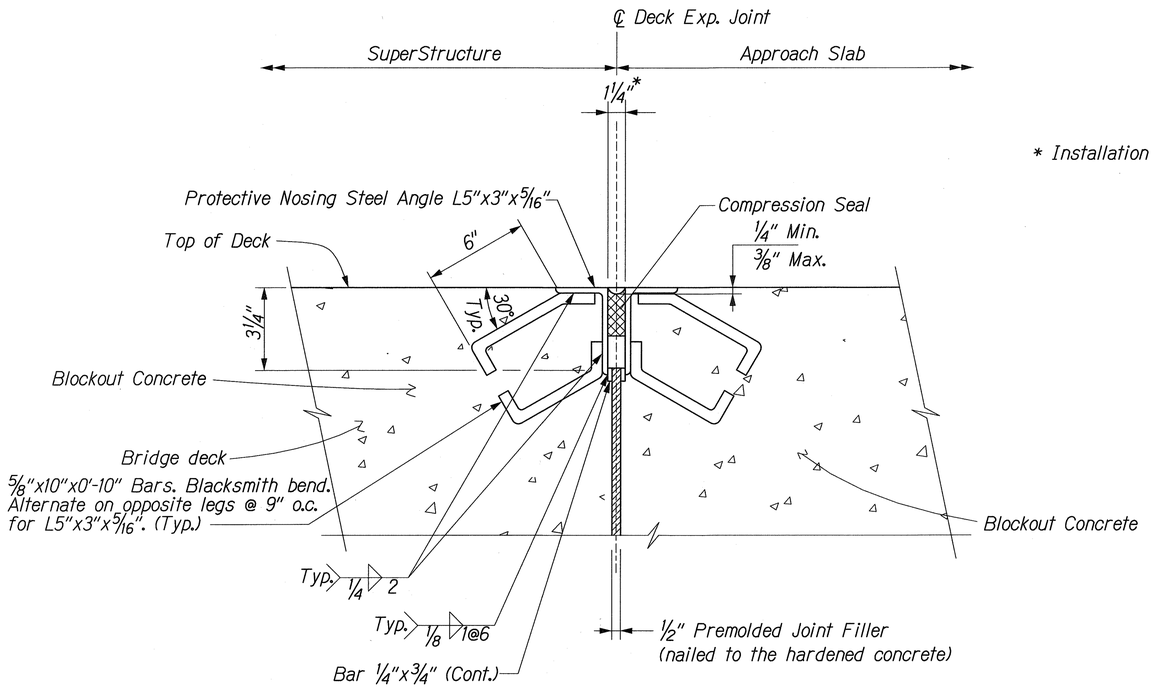

* Installation width at 75° F.

DECK EXPANSION JOINT DETAIL AND WAIHEE DITCH)

(FOR PALEAAHU BRIDGE AND WAIKAPU BRIDGE ~~ONLY~~)

Not to Scale

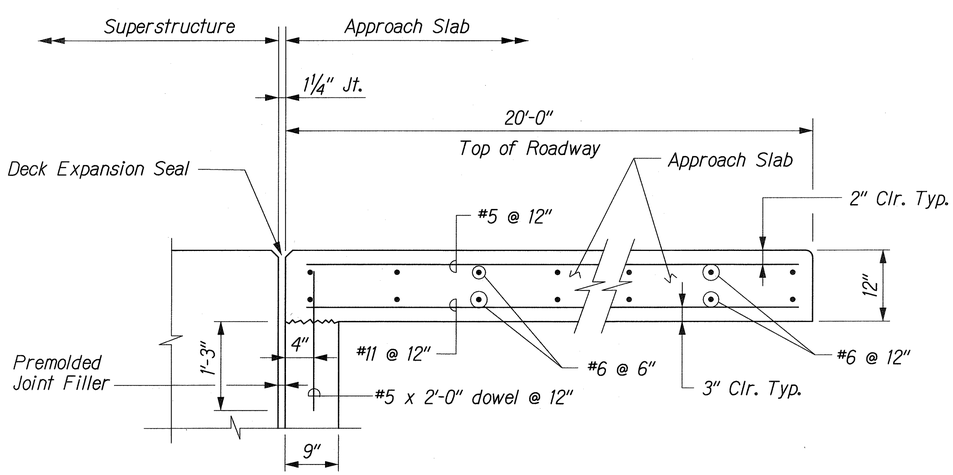

APPROACH SLAB DETAIL

Not to Scale

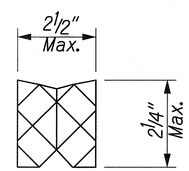

The Compression Seal shall be capable of resisting a maximum movement of 0.9".

DETAIL - COMPRESSION SEAL

Not to Scale

NOTE:

1. Compression seals, joint filler, nosing steel angles, anchor bars, pre-molded joint filler shown on deck expansion joint details shall be incidental to concrete in bridge.

LEGEND FOR AS-BUILT POSTINGS

∿∿∿	Squiggly line for as-built deletion
~~100.00~~	Double line for as-built deletion
Roadway	Text for as-built posting

ORIGINAL PLAN	SURVEY PLOTTED BY
	DRAWN BY
NOTE BOOK	TRACED BY
	DESIGNED BY
	QUANTITIES BY
No.	CHECKED BY
	DATE

J:\KUIHELANI\STRUCT\BR-DET01.dgn

HUI PANG CHEN LICENSED PROFESSIONAL ENGINEER No. 3865-S HAWAII, U.S.A.

THIS WORK WAS PREPARED BY ME OR UNDER MY SUPERVISION.

Hui Pang Chen

STATE OF HAWAII
DEPARTMENT OF TRANSPORTATION
HIGHWAYS DIVISION

DECK JOINT AND APPROACH SLAB DETAILS

KUIHELANI HIGHWAY WIDENING
HONOAPIILANI HIGHWAY TO PUUNENE AVENUE
FEDERAL-AID PROJECT NO. NH-0380(9)

Scale: As Shown Date: Sept. 14, 2001

SHEET No. S-35 OF 54 SHEETS

"AS-BUILT"

FED. ROAD DIST. NO.	STATE	FED. AID PROJ. NO.	FISCAL YEAR	SHEET NO.	TOTAL SHEETS
HAWAII	HAW.	NH-0380(9)	2000	198	380

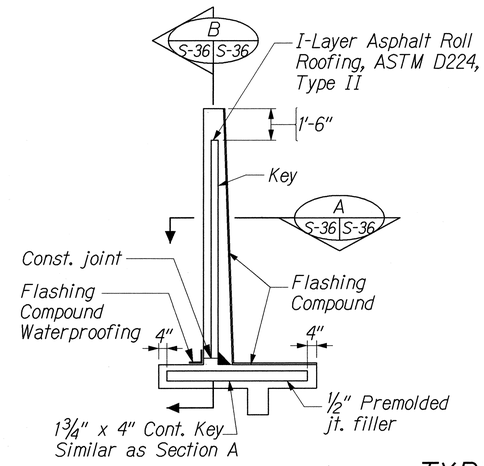

JOINT ELEVATION

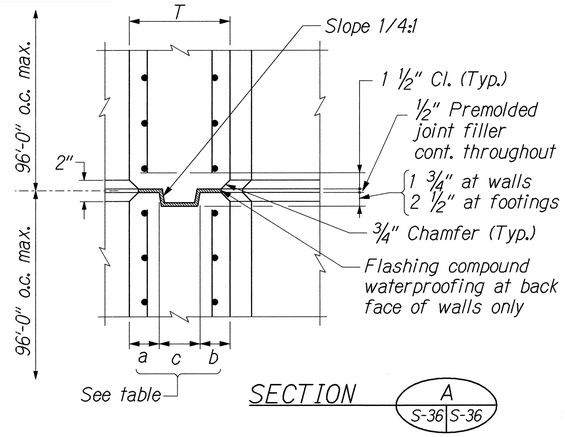

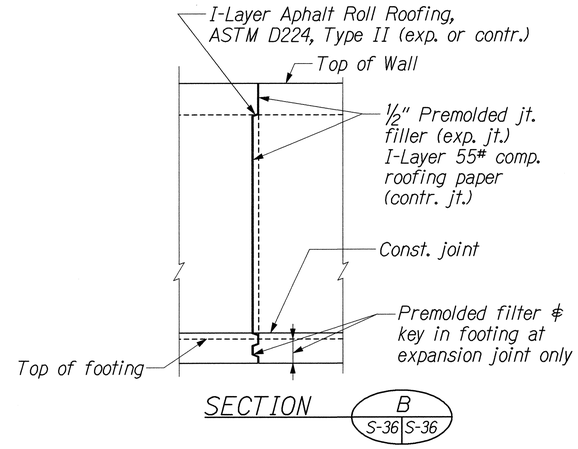

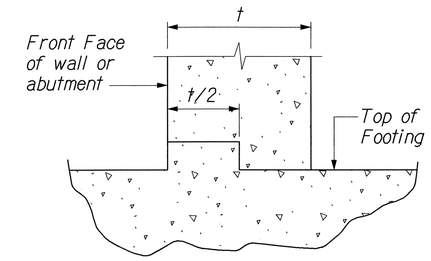

3" STEP KEY DETAIL
N.T.S.

TYPICAL EXPANSION JOINT DETAILS FOR REINF. CONC. STRUCTURE
N.T.S.

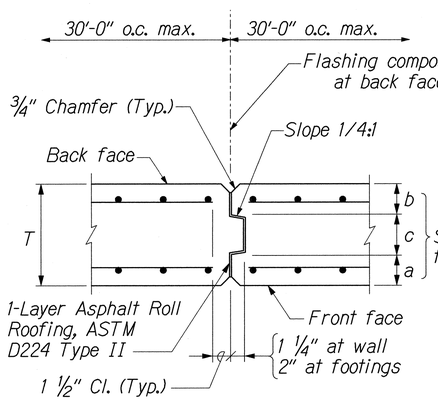

AT CONTROL JOINT

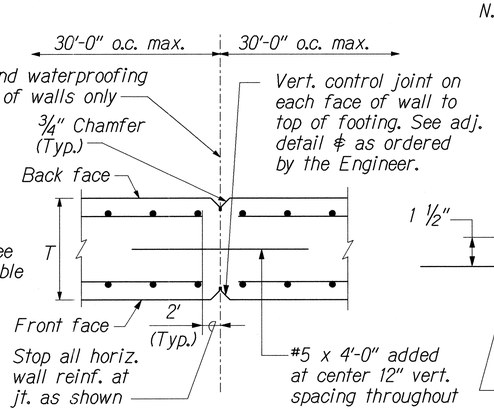

ALTERNATE CONTROL JOINT

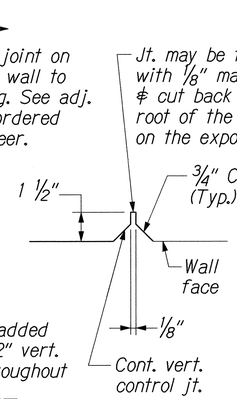

TABLE OF JOINT DIMENSIONS

	a	b	c
@ WALLS	T/3	T/3	T/3
@ FOOTINGS	T/3	T/3	T/3

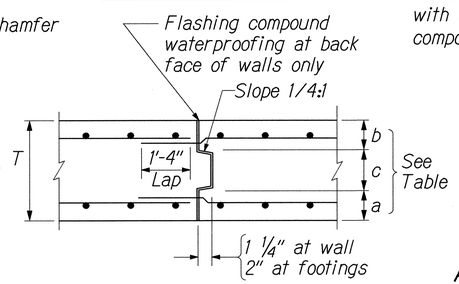

AT CONSTRUCTION JOINT

TYPICAL JOINT DETAILS FOR REINF. CONC. STRUCTURE
N.T.S.

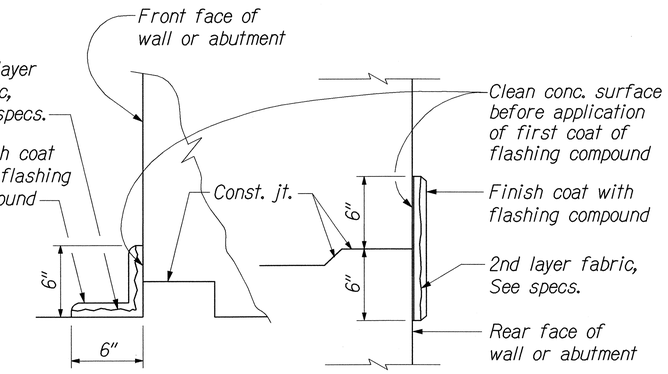

AT STEP KEY

AT HORIZONTAL JT.

TYPICAL FLASHING COMPOUND WATERPROOFING DETAIL

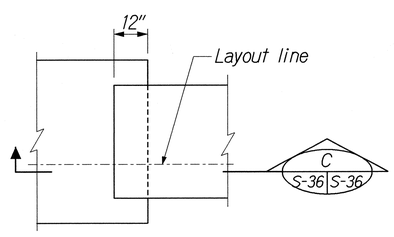

PLAN

AT CONTINUOUS FOOTING

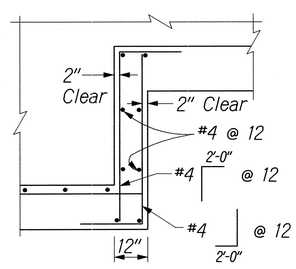

SECTION C
S-36 S-36

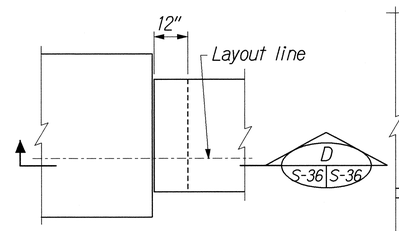

PLAN

AT EXPANSION JOINT

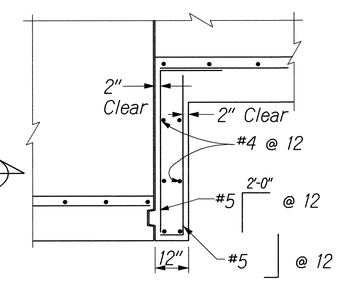

SECTION D
S-36 S-36

TYPICAL FOOTING STEP-UP DETAILS
N.T.S.

ORIGINAL PLAN | SURVEY PLOTTED BY | DRAWN BY | TRACED BY | DESIGNED BY | QUANTITIES BY | CHECKED BY | DATE
NOTE BOOK | No.
J:\KUIHELANI\STRUCT\RW-DET3.dgn

HUI PANG CHEN
LICENSED PROFESSIONAL ENGINEER
No. 3865-S
HAWAII, U.S.A.

THIS WORK WAS PREPARED BY ME OR UNDER MY SUPERVISION.

STATE OF HAWAII
DEPARTMENT OF TRANSPORTATION
HIGHWAYS DIVISION

MISCELLANEOUS DETAILS-1

KUIHELANI HIGHWAY WIDENING
HONOAPIILANI HIGHWAY TO PUUNENE AVENUE
FEDERAL-AID PROJECT NO. NH-0380(9)

Scale: As Shown Date: Sept. 14, 2001

SHEET No. S-36 OF 54 SHEETS

FED. ROAD DIST. NO.	STATE	FED. AID PROJ. NO.	FISCAL YEAR	SHEET NO.	TOTAL SHEETS
HAWAII	HAW.	NH-0380(9)	2000	199	380

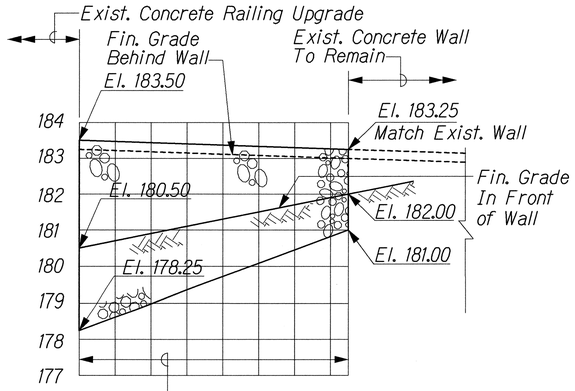

WALL C (CRM)

Scale: ½" = 1'-0"

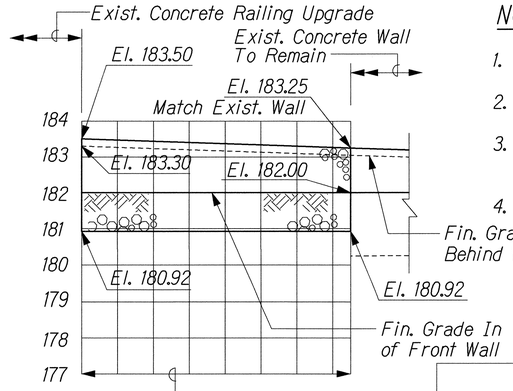

WALL F (CRM)

Scale: ½" = 1'-0"

NOTES:

1. For location plan of Walls "A" & "B", See Sheet. No S-27.
2. For location plan of Walls "C", "D", "E" & "F", See Sheet. No S-20.
3. For Constructions of "C", "D", "E" & "F", See Note 7 on Sht. No. S-20.
4. See Note 1 on Sht. No. S-30.

TABLE 1		
Wall	Top of Wall Thickness. (t1)	Slope (X:12)
A	3'-3"	10:12
B	3'-3"	10:12
C	1'-6"	6:12
D	2'-4"	6:12
E	1'-6"	6:12
F	1'-7"	3:12

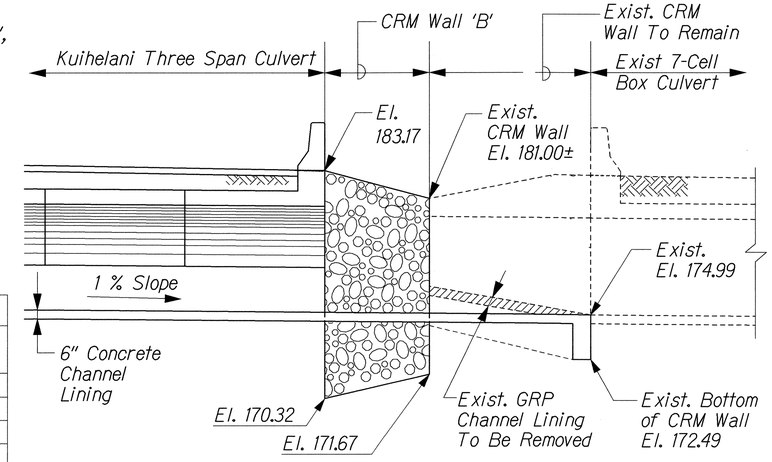

CRM WALL 'B' ELEVATION

Scale: ¼" = 1'-0"

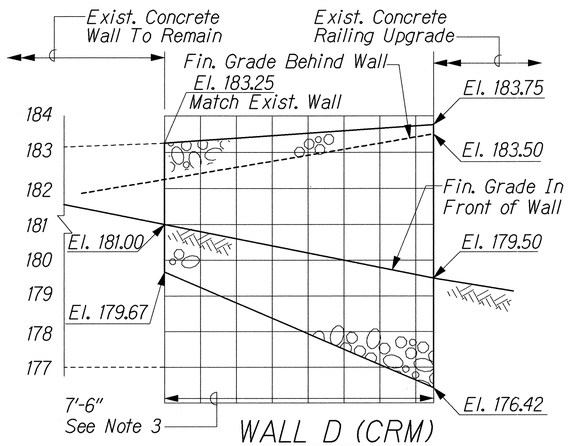

WALL D (CRM)

Scale: ½" = 1'-0"

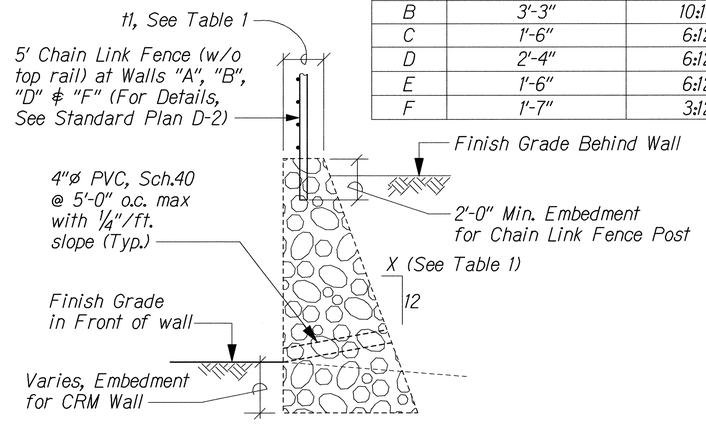

TYPICAL SECTION FOR CRM WALL FENCE

Not To Scale

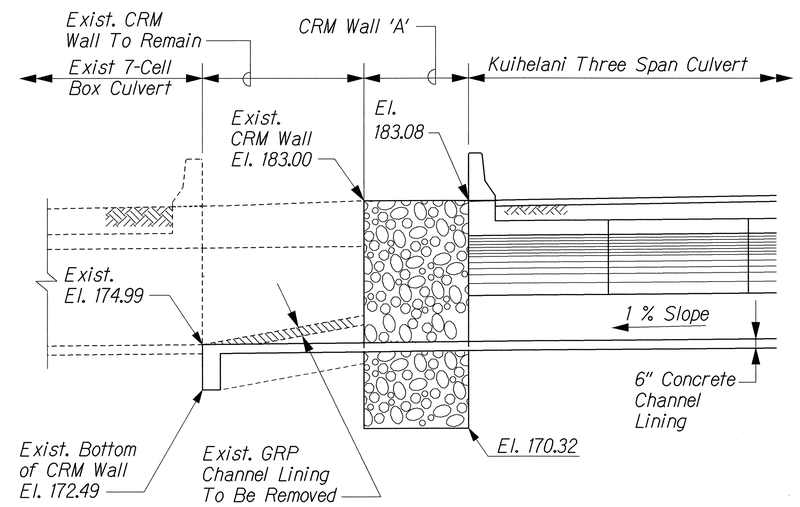

CRM WALL 'A' ELEVATION

Scale: ¼" = 1'-0"

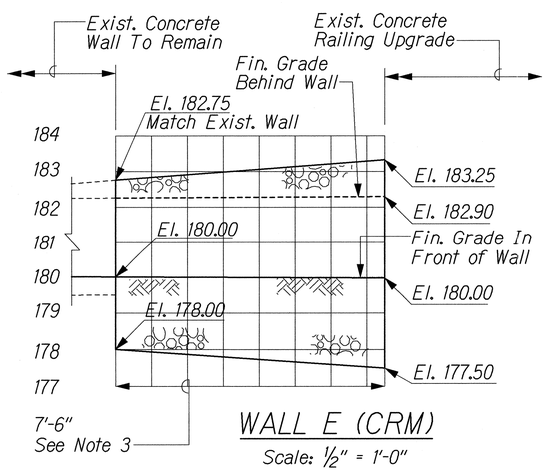

WALL E (CRM)

Scale: ½" = 1'-0"

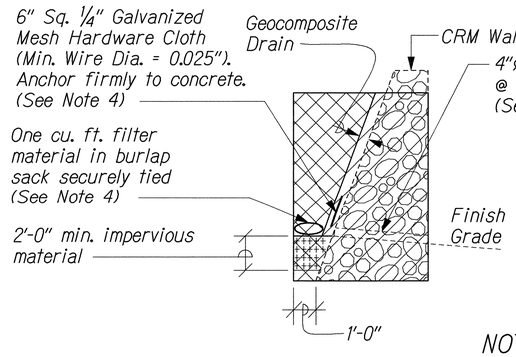

CRM WALL PAYMENT LIMIT

Not To Scale

LEGEND:

- Structure Excavation See Note 3
- Structure Backfill
- Impervious Material, See Note "A".

NOTE "A":

Impervious Material as selected by the Engineer shall be made as impervious as possible by pneumatic tamping or other approved methods.

ORIGINAL PLAN	SURVEY PLOTTED BY	DATE
	DRAWN BY	
	TRACED BY	
NOTE BOOK	DESIGNED BY	
	QUANTITIES BY	
No.	CHECKED BY	

J:/KUIHELANI/STRUCT/ST-DET3.dgn

STATE OF HAWAII
DEPARTMENT OF TRANSPORTATION
HIGHWAYS DIVISION

HUI PANG CHEN
LICENSED PROFESSIONAL ENGINEER
No. 3865-S
HAWAII, U.S.A.

THIS WORK WAS PREPARED BY ME OR UNDER MY SUPERVISION.

Hui Pang Chen

MISCELLANEOUS DETAILS-2

KUIHELANI HIGHWAY WIDENING
HONOAPIILANI HIGHWAY TO PUUNENE AVENUE
FEDERAL-AID PROJECT NO. NH-0380(9)

Scale: As Shown Date: Sept. 14, 2001

SHEET No. S-37 OF 54 SHEETS

FED. ROAD DIST. NO.	STATE	FED. AID PROJ. NO.	FISCAL YEAR	SHEET NO.	TOTAL SHEETS
HAWAII	HAW.	NH-0380(9)	2000	200	380

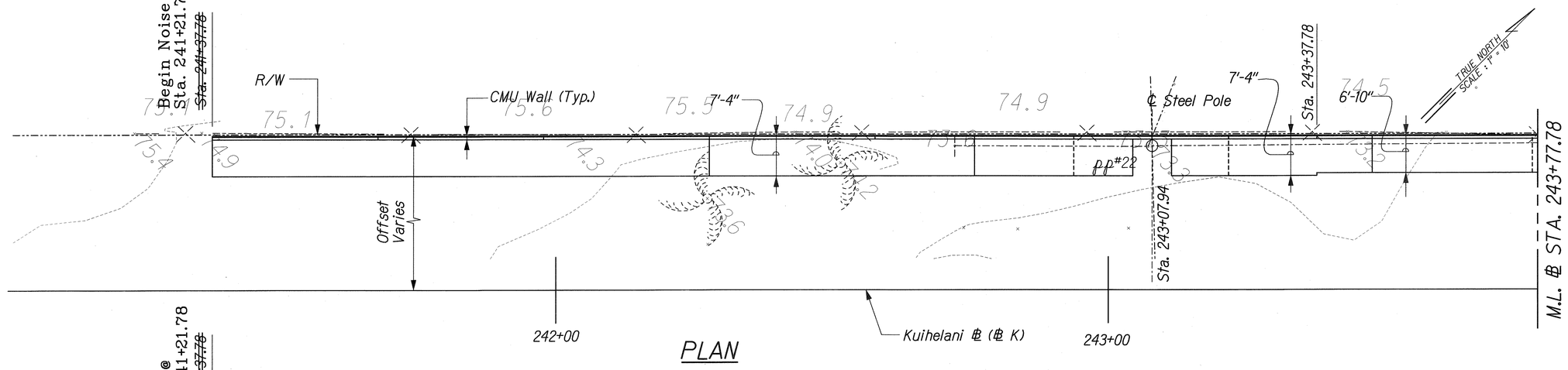

PLAN

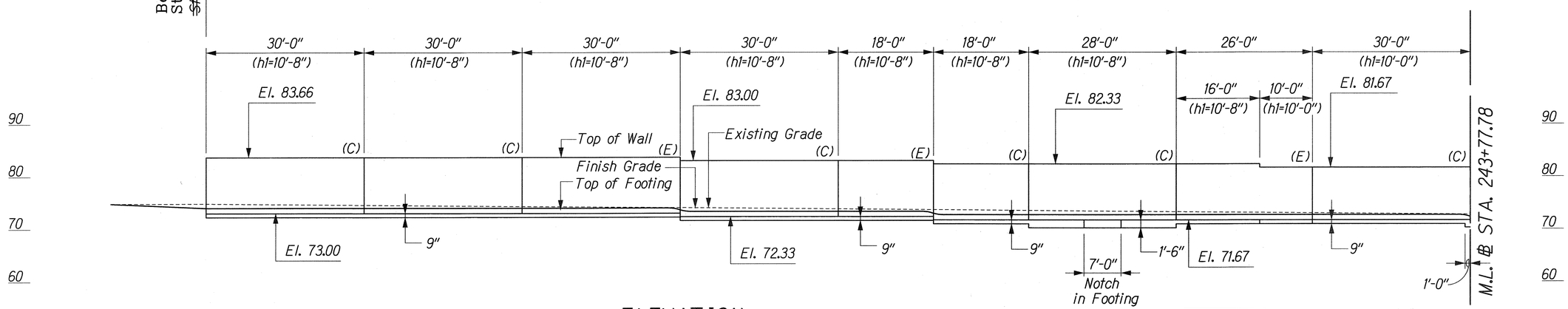

ELEVATION

ESTIMATED QUANTITIES

ITEM NO.	ITEM	UNIT	QUANTITIES
513.	8'-0" Height CMU Noise Wall*	LF	300'
513.	8'-8" Height CMU Noise Wall*	LF	700'
513.	10'-0" Height CMU Noise Wall*	LF	1407'
513.	10'-8" Height CMU Noise Wall*	LF	1429'

* Quantities include Concrete Footing, Structure Excavation, Backfill, Class D Concrete Fill, CMU Units, Grout for CMU, and Reinforcing Steel.

LEGEND:

(C) Denotes Control Joint

(E) Denotes Expansion Joint

—⊖— Denotes Existing Wooden Pole to be removed

⊡ Denotes Steel Pole (See Note 3)

NOTES:

1. For detail of notch in footing for steel pole, See Sht. No. S-54.
2. For details of control and expansion joints for CMU Wall, See Sht. No. S-53.
3. The locations of the relocated steel poles are approximate per MECO. The contractor shall coordinate with MECO on the exact locations of steel poles prior to construction of the CMU wall panels which require a notched footing for the steel poles.
4. The length of wall shown on Elevation is measured along the front face of wall.

LEGEND FOR AS-BUILT POSTINGS

∿∿∿	Squiggly line for as-built deletion
~~100.00~~	Double line for as-built deletion
Roadway	Text for as-built posting

HUI PANG CHEN
LICENSED PROFESSIONAL ENGINEER
No. 3865-S
HAWAII, U.S.A.

THIS WORK WAS PREPARED BY ME OR UNDER MY SUPERVISION.

Hui Pang Chen

STATE OF HAWAII
DEPARTMENT OF TRANSPORTATION
HIGHWAYS DIVISION

CMU NOISE WALL
PLAN & ELEVATION-1
KUIHELANI HIGHWAY WIDENING
HONOAPIILANI HIGHWAY TO PUUNENE AVENUE
FEDERAL-AID PROJECT NO. NH-0380(9)

Scale: 1" = 10' Date: Sept. 14, 2001

SHEET No. S-38 OF 54 SHEETS

ORIGINAL PLAN | SURVEY PLOTTED BY | DRAWN BY | TRACED BY | DESIGNED BY | QUANTITIES BY | CHECKED BY | DATE
NOTE BOOK No.

J:/KUIHELANI/STRUCT/NW-01.dgn

"AS-BUILT"

FED. ROAD DIST. NO.	STATE	FED. AID PROJ. NO.	FISCAL YEAR	SHEET NO.	TOTAL SHEETS
HAWAII	HAW.	NH-0380(9)	2000	201	380

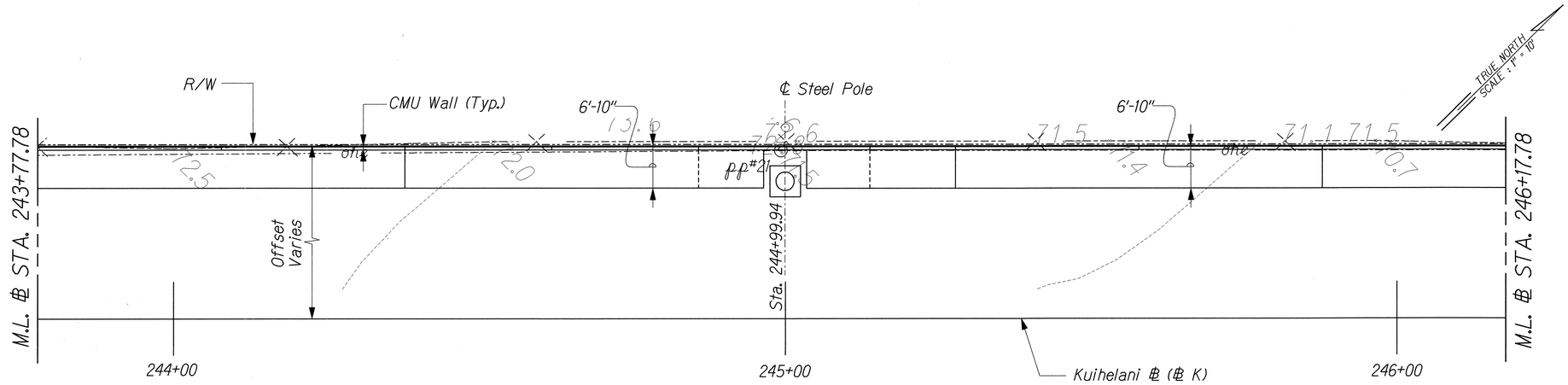

PLAN

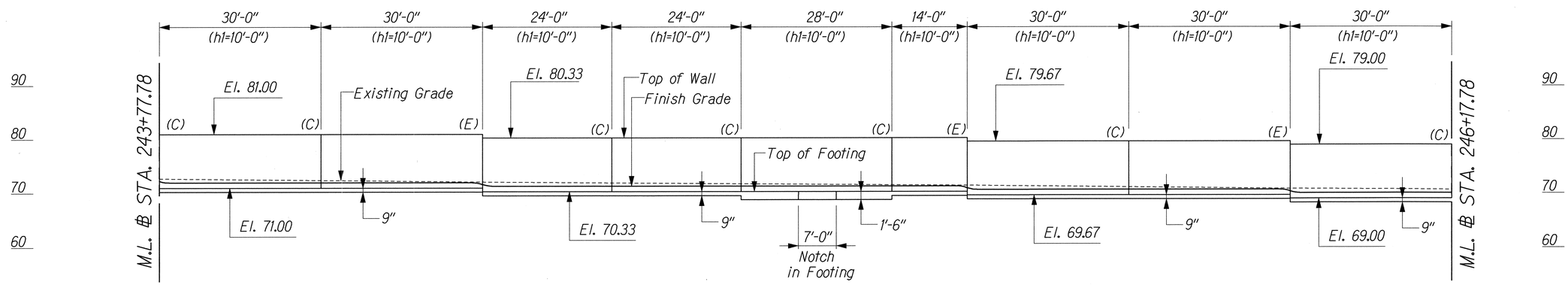

ELEVATION

NOTES:

1. See Legend on Sht. No. S-38.
2. See Notes on Sht. No. S-38.

ORIGINAL PLAN	SURVEY PLOTTED BY	DATE
	DRAWN BY	
	TRACED BY	
NOTE BOOK	DESIGNED BY	
	QUANTITIES BY	
No.	CHECKED BY	

J:/KUIHELANI/STRUCT/NW-02.dgn

HUI PANG CHEN
LICENSED PROFESSIONAL ENGINEER
No. 3865-S
HAWAII, U.S.A.

THIS WORK WAS PREPARED BY ME OR UNDER MY SUPERVISION.

Hui Pang Chen

STATE OF HAWAII
DEPARTMENT OF TRANSPORTATION
HIGHWAYS DIVISION

CMU NOISE WALL
PLAN & ELEVATION-2
KUIHELANI HIGHWAY WIDENING
HONOAPIILANI HIGHWAY TO PUUNENE AVENUE
FEDERAL-AID PROJECT NO. NH-0380(9)

Scale: 1" = 10' Date: Sept. 14, 2001

SHEET No. S-39 OF 54 SHEETS

FED. ROAD DIST. NO.	STATE	FED. AID PROJ. NO.	FISCAL YEAR	SHEET NO.	TOTAL SHEETS
HAWAII	HAW.	NH-0380(9)	2000	202	380

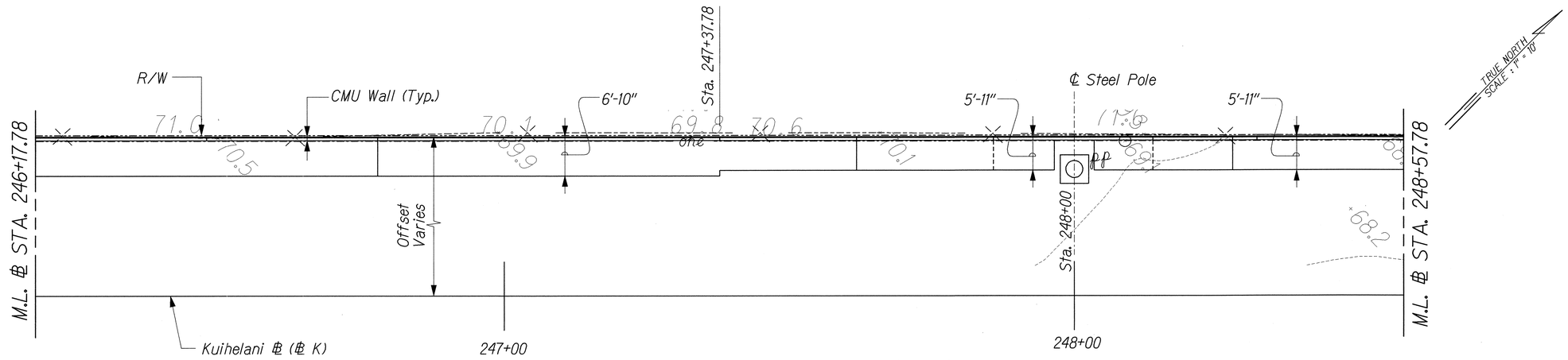

PLAN

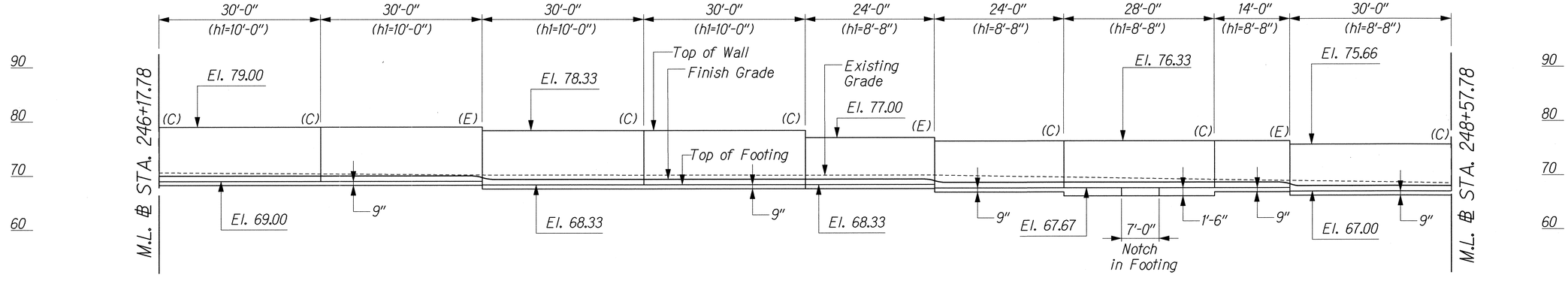

ELEVATION

NOTES:

1. See Legend on Sht. No. S-38.
2. See Notes on Sht. No. S-38.

ORIGINAL PLAN	SURVEY PLOTTED BY	DATE
	DRAWN BY	
	TRACED BY	
NOTE BOOK	DESIGNED BY	
	QUANTITIES BY	
No.	CHECKED BY	

J:/KUIHELANI/STRUCT/NW-03.dgn

HU PANG CHEN
LICENSED PROFESSIONAL ENGINEER
No. 3865-S
HAWAII, U.S.A.

THIS WORK WAS PREPARED BY ME OR UNDER MY SUPERVISION.

Hupang Chen

STATE OF HAWAII
DEPARTMENT OF TRANSPORTATION
HIGHWAYS DIVISION

CMU NOISE WALL
PLAN & ELEVATION-3
KUIHELANI HIGHWAY WIDENING
HONOAPIILANI HIGHWAY TO PUUNENE AVENUE
FEDERAL-AID PROJECT NO. NH-0380(9)

Scale: 1" = 10' Date: Sept. 14, 2001

SHEET No. S-40 OF 54 SHEETS

FED. ROAD DIST. NO.	STATE	FED. AID PROJ. NO.	FISCAL YEAR	SHEET NO.	TOTAL SHEETS
HAWAII	HAW.	NH-0380(9)	2000	203	380

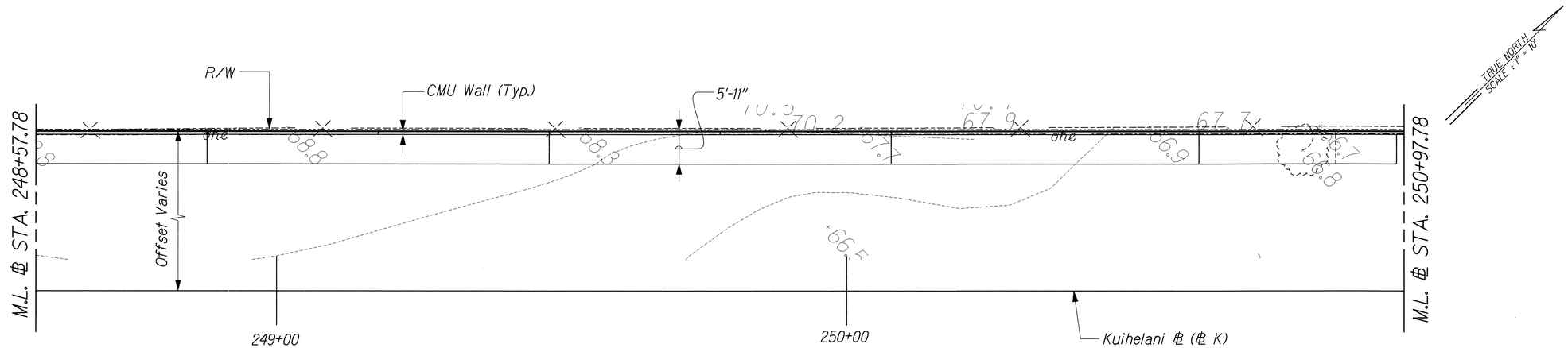

PLAN

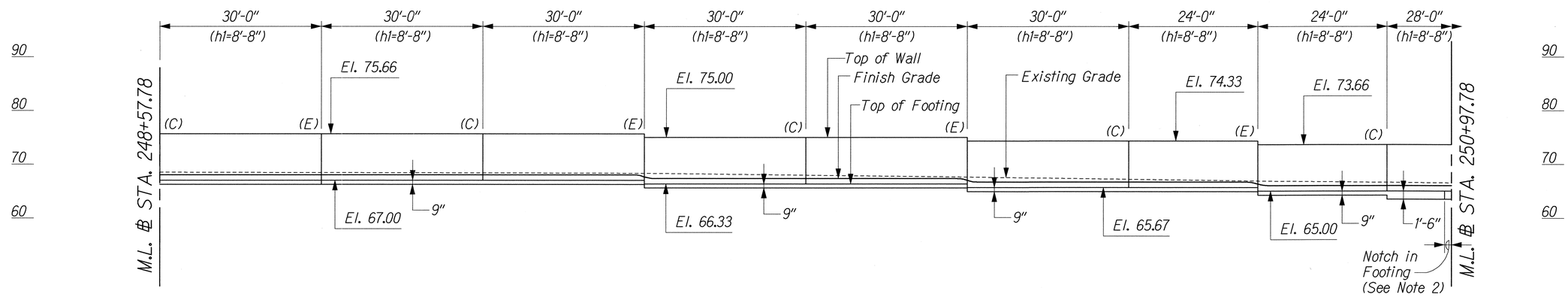

ELEVATION

NOTES:

1. See Legend on Sht. No. S-38.
2. See Notes 1, 2, and 4 on Sht. No. S-38.

ORIGINAL PLAN	SURVEY PLOTTED BY	DATE
	DRAWN BY	
	TRACED BY	
NOTE BOOK	DESIGNED BY	
	QUANTITIES BY	
No.	CHECKED BY	

J:/KUIHELANI/STRUCT/NW-04.dgn

HUI PANG CHEN
LICENSED PROFESSIONAL ENGINEER
No. 3865-S
HAWAII, U.S.A.

THIS WORK WAS PREPARED BY ME OR UNDER MY SUPERVISION.

Hui Pang Chen

STATE OF HAWAII
DEPARTMENT OF TRANSPORTATION
HIGHWAYS DIVISION

CMU NOISE WALL
PLAN & ELEVATION-4
KUIHELANI HIGHWAY WIDENING
HONOAPIILANI HIGHWAY TO PUUNENE AVENUE
FEDERAL-AID PROJECT NO. NH-0380(9)

Scale: 1" = 10' Date: Sept. 14, 2001

SHEET No. S-41 OF 54 SHEETS

FED. ROAD DIST. NO.	STATE	FED. AID PROJ. NO.	FISCAL YEAR	SHEET NO.	TOTAL SHEETS
HAWAII	HAW.	NH-0380(9)	2000	204	380

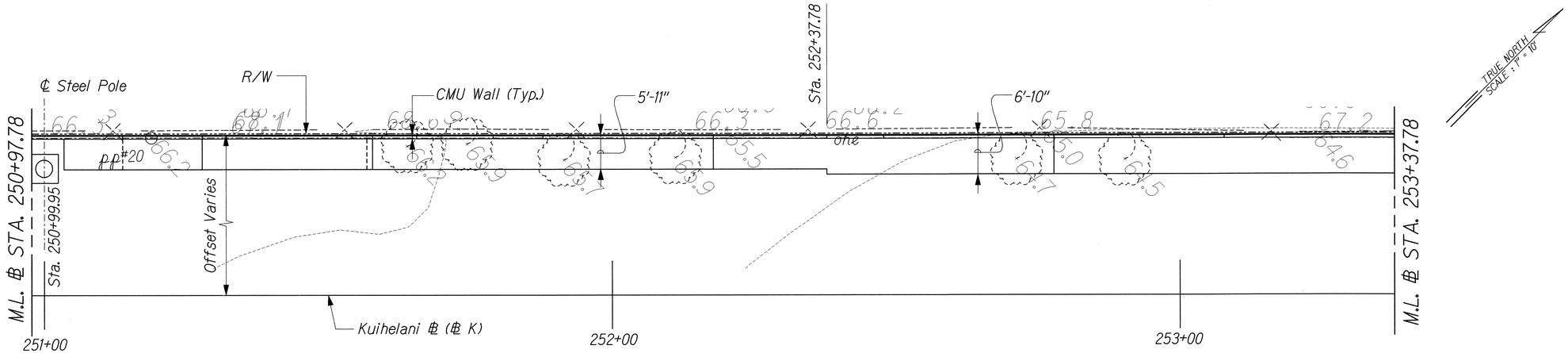

PLAN

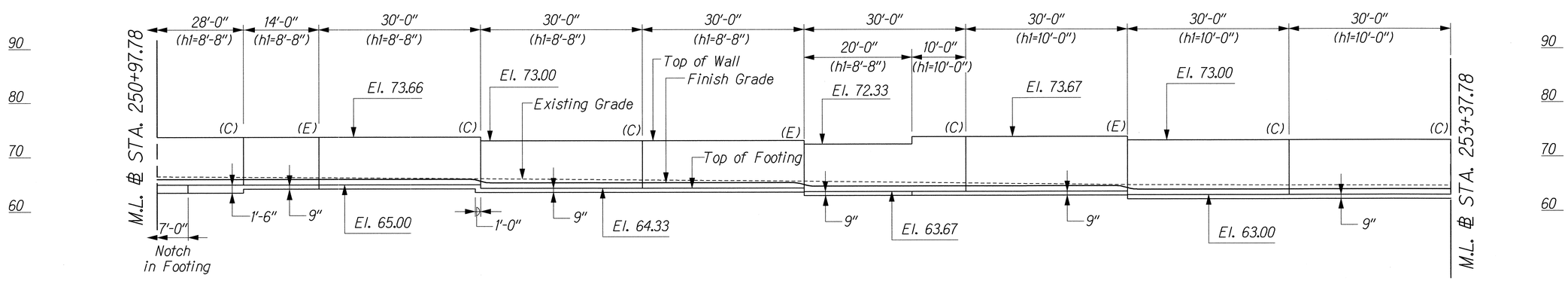

ELEVATION

NOTES:

1. See Legend on Sht. No. S-38.
2. See Notes on Sht. No. S-38.

ORIGINAL PLAN	SURVEY PLOTTED BY	DATE
	DRAWN BY	
	TRACED BY	
NOTE BOOK	DESIGNED BY	
	QUANTITIES BY	
No.	CHECKED BY	

J:/KUIHELANI/STRUCT/NW-05.dgn

HU PANG CHEN
LICENSED PROFESSIONAL ENGINEER
No. 3865-S
HAWAII, U.S.A.

THIS WORK WAS PREPARED BY ME OR UNDER MY SUPERVISION.

Hu Pang Chen

STATE OF HAWAII
DEPARTMENT OF TRANSPORTATION
HIGHWAYS DIVISION

CMU NOISE WALL
PLAN & ELEVATION-5
KUIHELANI HIGHWAY WIDENING
HONOAPIILANI HIGHWAY TO PUUNENE AVENUE
FEDERAL-AID PROJECT NO. NH-0380(9)

Scale: 1" = 10' Date: Sept. 14, 2001

SHEET No. S-42 OF 54 SHEETS

FED. ROAD DIST. NO.	STATE	FED. AID PROJ. NO.	FISCAL YEAR	SHEET NO.	TOTAL SHEETS
HAWAII	HAW.	NH-0380(9)	2000	205	380

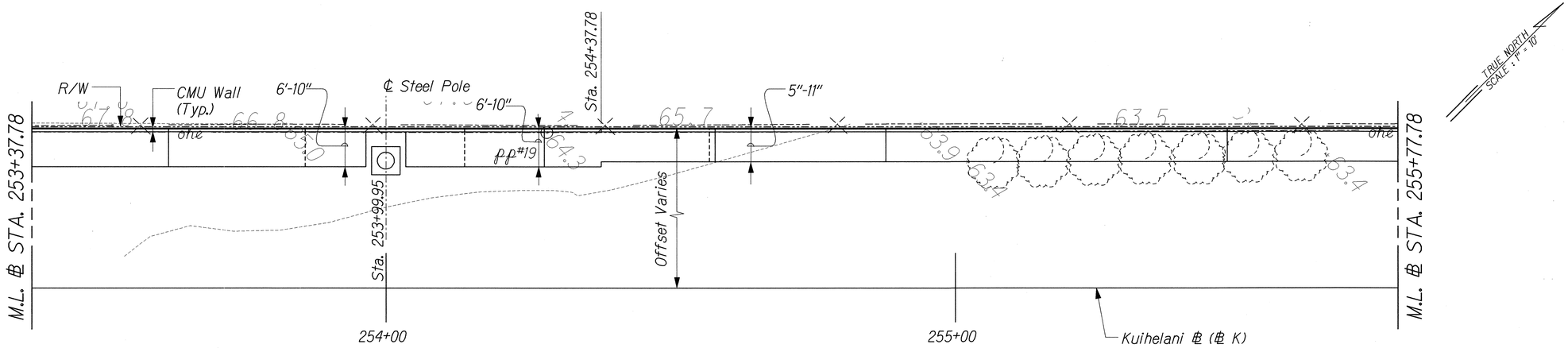

PLAN

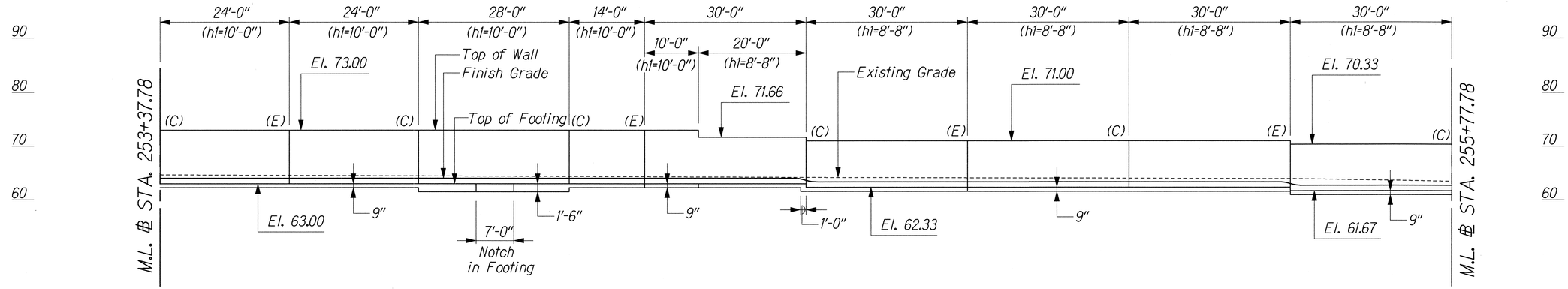

ELEVATION

NOTES:

1. See Legend on Sht. No. S-38.
2. See Notes on Sht. No. S-38.

ORIGINAL PLAN	SURVEY PLOTTED BY	DATE
	DRAWN BY	
NOTE BOOK	TRACED BY	
	DESIGNED BY	
No.	QUANTITIES BY	
	CHECKED BY	

J:/KUIHELANI/STRUCT/NW-06.dgn

HUI PANG CHEN LICENSED PROFESSIONAL ENGINEER No. 3865-S HAWAII, U.S.A.

THIS WORK WAS PREPARED BY ME OR UNDER MY SUPERVISION.

Huipang Chen

STATE OF HAWAII
DEPARTMENT OF TRANSPORTATION
HIGHWAYS DIVISION

CMU NOISE WALL
PLAN & ELEVATION-6
KUIHELANI HIGHWAY WIDENING
HONOAPIILANI HIGHWAY TO PUUNENE AVENUE
FEDERAL-AID PROJECT NO. NH-0380(9)

Scale: 1" = 10' Date: Sept. 14, 2001

SHEET No. S-43 OF 54 SHEETS

FED. ROAD DIST. NO.	STATE	FED. AID PROJ. NO.	FISCAL YEAR	SHEET NO.	TOTAL SHEETS
HAWAII	HAW.	NH-0380(9)	2000	206	380

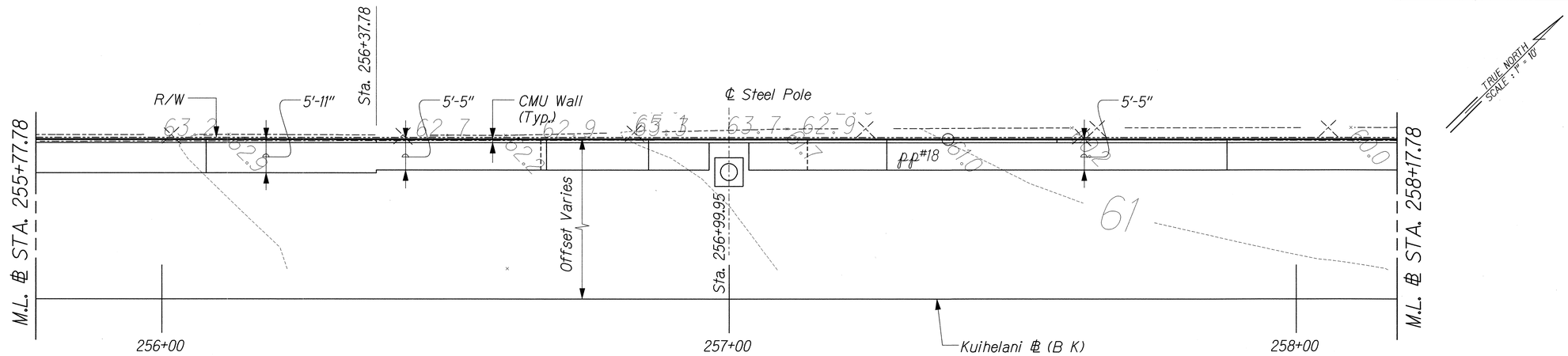

PLAN

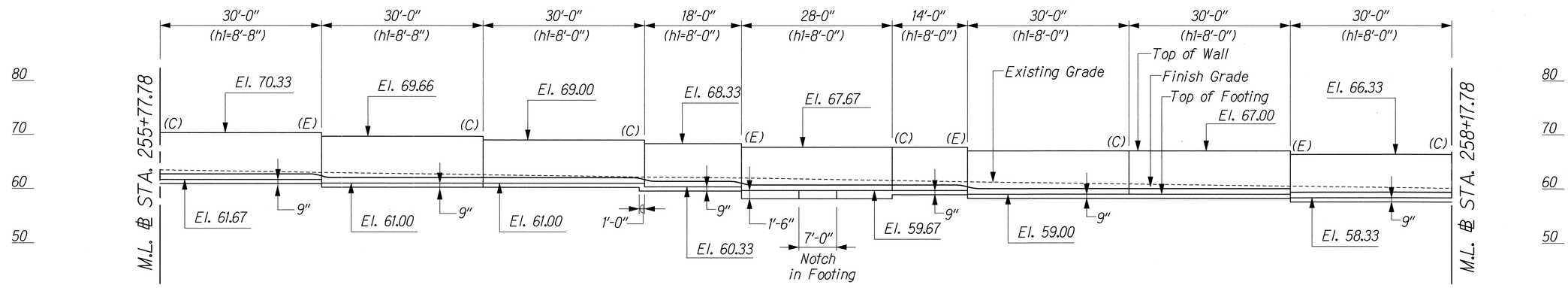

ELEVATION

NOTES:

1. See Legend on Sht. No. S-38.
2. See Notes on Sht. No. S-38.

ORIGINAL PLAN	SURVEY PLOTTED BY	DATE
	DRAWN BY	
	TRACED BY	
NOTE BOOK	DESIGNED BY	
	QUANTITIES BY	
No.	CHECKED BY	

J:/KUIHELANI/STRUCT/NW-07.dgn

HU PANG CHEN
LICENSED PROFESSIONAL ENGINEER
No. 3865-S
HAWAII, U.S.A.

THIS WORK WAS PREPARED BY ME OR UNDER MY SUPERVISION.

Hupang Chen

STATE OF HAWAII
DEPARTMENT OF TRANSPORTATION
HIGHWAYS DIVISION

CMU NOISE WALL
PLAN & ELEVATION-7
KUIHELANI HIGHWAY WIDENING
HONOAPIILANI HIGHWAY TO PUUNENE AVENUE
FEDERAL-AID PROJECT NO. NH-0380(9)

Scale: 1" = 10' Date: Sept. 14, 2001

SHEET No. S-44 OF 54 SHEETS

FED. ROAD DIST. NO.	STATE	FED. AID PROJ. NO.	FISCAL YEAR	SHEET NO.	TOTAL SHEETS
HAWAII	HAW.	NH-0380(9)	2000	207	380

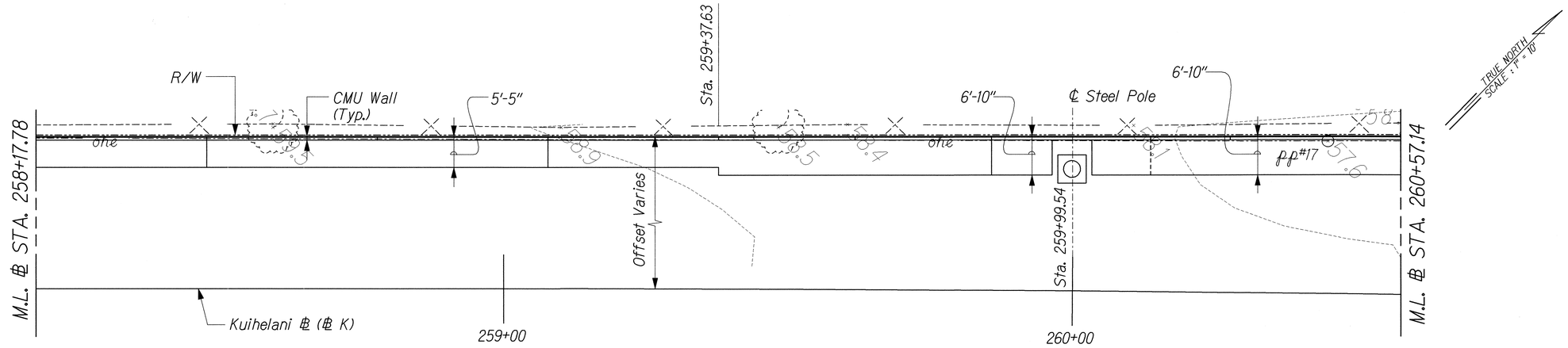

PLAN

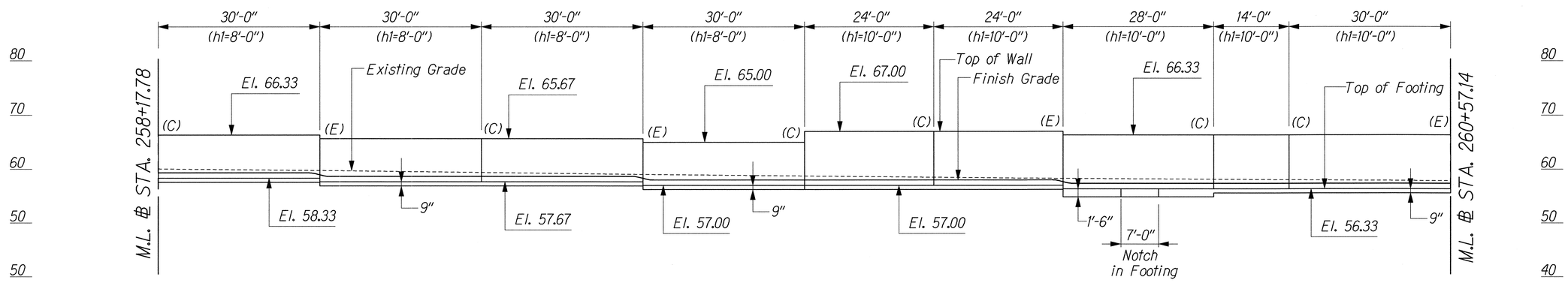

ELEVATION

NOTES:

1. See Legend on Sht. No. S-38.
2. See Notes on Sht. No. S-38.

ORIGINAL PLAN	SURVEY PLOTTED BY	DATE
	DRAWN BY	
NOTE BOOK	TRACED BY	
	DESIGNED BY	
	QUANTITIES BY	
No.	CHECKED BY	

J:/KUIHELANI/STRUCT/NW-08.dgn

HUI PANG CHEN LICENSED PROFESSIONAL ENGINEER No. 3865-S HAWAII, U.S.A.

THIS WORK WAS PREPARED BY ME OR UNDER MY SUPERVISION.

Huipang Chen

STATE OF HAWAII
DEPARTMENT OF TRANSPORTATION
HIGHWAYS DIVISION

CMU NOISE WALL
PLAN & ELEVATION-8
KUIHELANI HIGHWAY WIDENING
HONOAPIILANI HIGHWAY TO PUUNENE AVENUE
FEDERAL-AID PROJECT NO. NH-0380(9)

Scale: 1' = 10' Date: Sept. 14, 2001

SHEET No. S-45 OF 54 SHEETS

FED. ROAD DIST. NO.	STATE	FED. AID PROJ. NO.	FISCAL YEAR	SHEET NO.	TOTAL SHEETS
HAWAII	HAW.	NH-0380(9)	2000	208	380

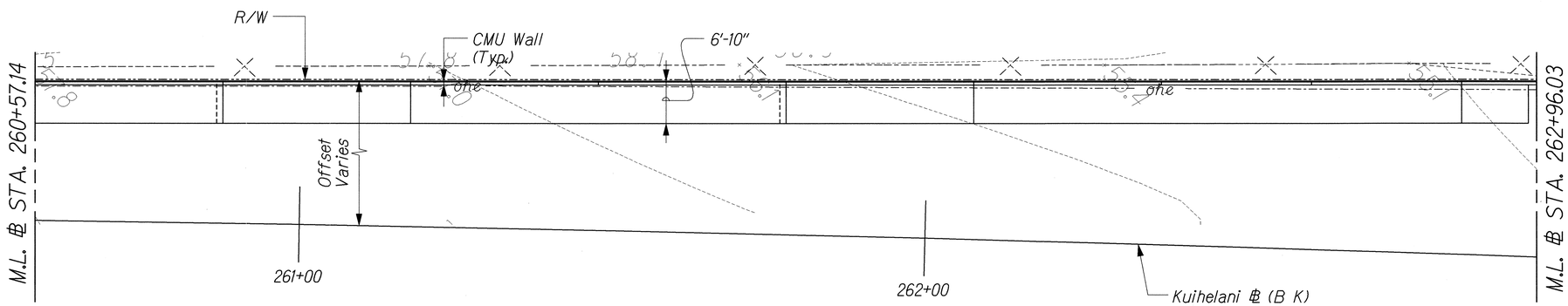

PLAN

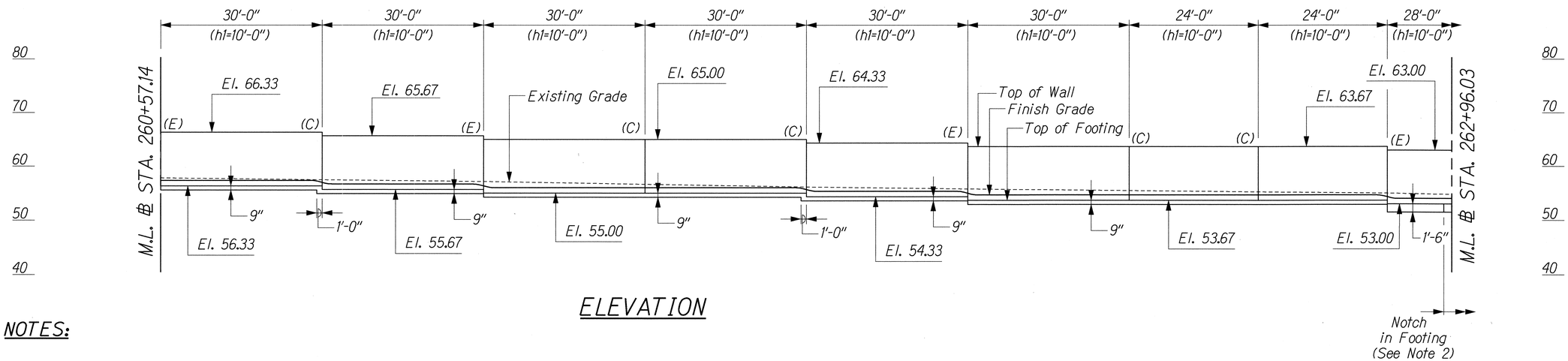

ELEVATION

NOTES:

1. See Legend on Sht. No. S-38.
2. See Notes 1, 2, and 4 on Sht. No. S-38.

ORIGINAL PLAN	SURVEY PLOTTED BY	DATE
NOTE BOOK	DRAWN BY	
No.	TRACED BY	
	DESIGNED BY	
	QUANTITIES BY	
	CHECKED BY	

J:/KUIHELANI/STRUCT/NW-09.dgn

HUI PANG CHEN LICENSED PROFESSIONAL ENGINEER No. 3865-S HAWAII, U.S.A.

THIS WORK WAS PREPARED BY ME OR UNDER MY SUPERVISION.

Huipang Chen

STATE OF HAWAII
DEPARTMENT OF TRANSPORTATION
HIGHWAYS DIVISION

CMU NOISE WALL
PLAN & ELEVATION-9
KUIHELANI HIGHWAY WIDENING
HONOAPIILANI HIGHWAY TO PUUNENE AVENUE
FEDERAL-AID PROJECT NO. NH-0380(9)

Scale: 1" = 10' Date: Sept. 14, 2001

SHEET No. S-46 OF 54 SHEETS

FED. ROAD DIST. NO.	STATE	FED. AID PROJ. NO.	FISCAL YEAR	SHEET NO.	TOTAL SHEETS
HAWAII	HAW.	NH-0380(9)	2000	209	380

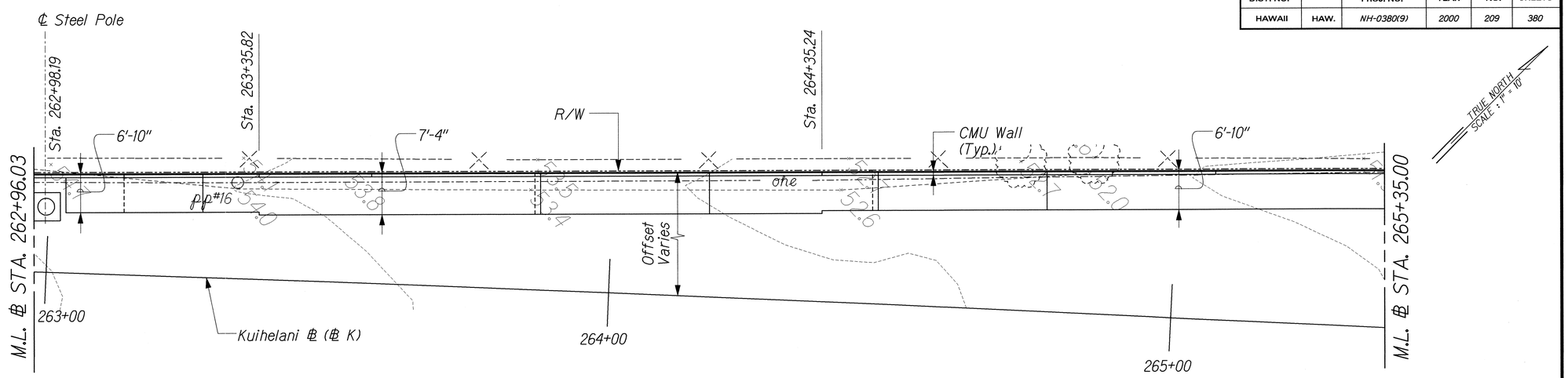

PLAN

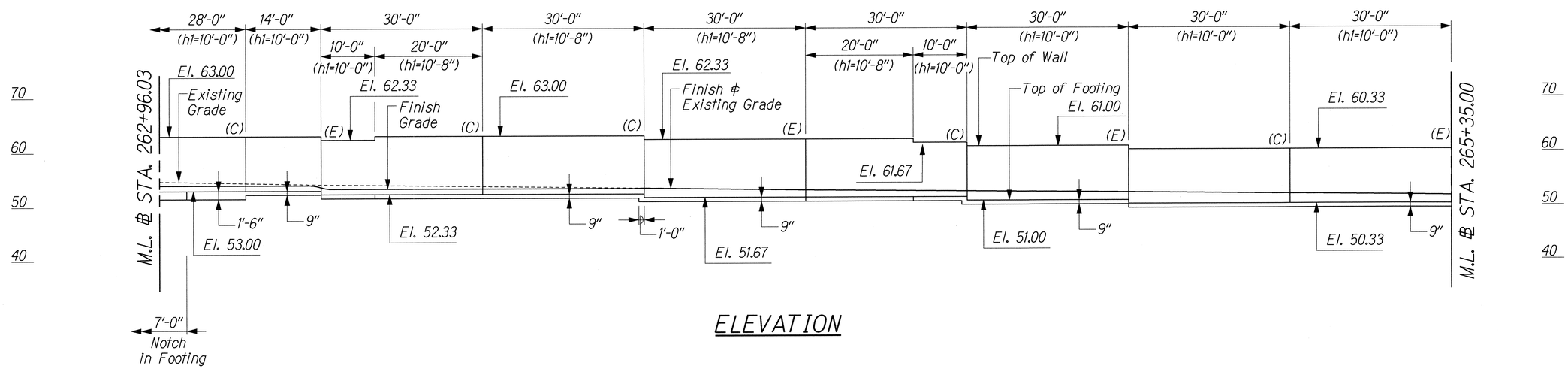

ELEVATION

NOTES:

1. See Legend on Sht. No. S-38.
2. See Notes on Sht. No. S-38.

ORIGINAL PLAN	SURVEY PLOTTED BY	DATE
	DRAFN BY	
	TRACED BY	
NOTE BOOK	DESIGNED BY	
	QUANTITIES BY	
No.	CHECKED BY	

J:/KUIHELANI/STRUCT/NN-10.dgn

HUI PANG CHEN
LICENSED PROFESSIONAL ENGINEER
No. 3865-S
HAWAII, U.S.A.

THIS WORK WAS PREPARED BY ME OR UNDER MY SUPERVISION.

STATE OF HAWAII
DEPARTMENT OF TRANSPORTATION
HIGHWAYS DIVISION

CMU NOISE WALL
PLAN & ELEVATION-10
KUIHELANI HIGHWAY WIDENING
HONOAPIILANI HIGHWAY TO PUUNENE AVENUE
FEDERAL-AID PROJECT NO. NH-0380(9)

Scale: 1" = 10' Date: Sept. 14, 2001

SHEET No. S-47 OF 54 SHEETS

FED. ROAD DIST. NO.	STATE	FED. AID PROJ. NO.	FISCAL YEAR	SHEET NO.	TOTAL SHEETS
HAWAII	HAW.	NH-0380(9)	2000	210	380

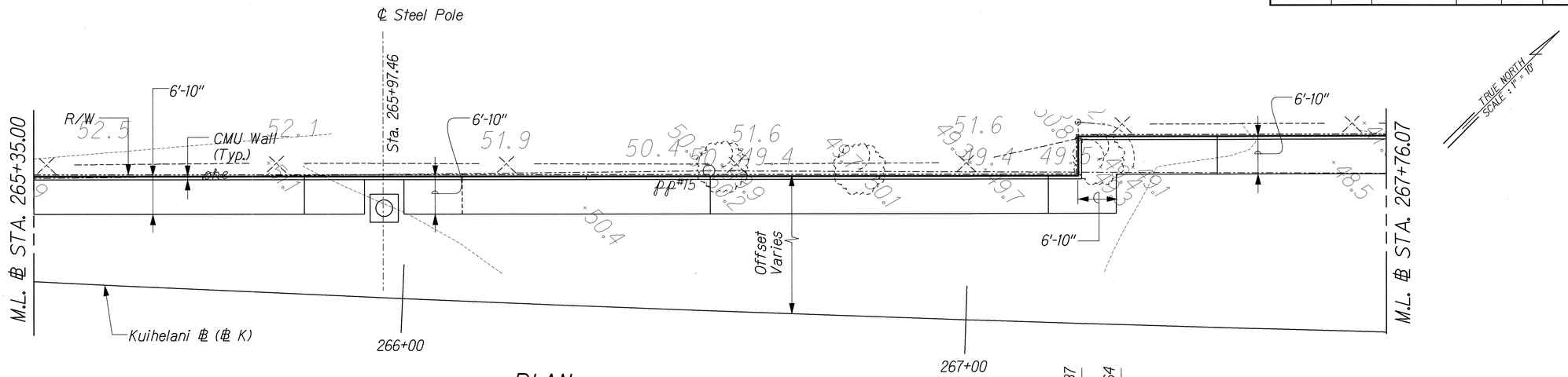

PLAN

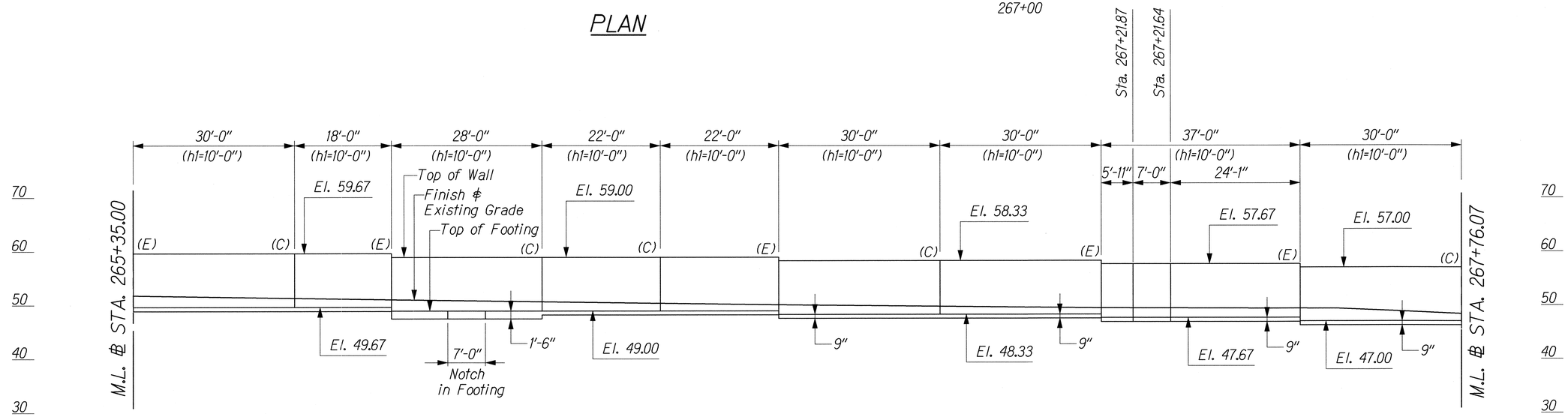

ELEVATION

NOTES:

1. See Legend on Sht. No. S-38.
2. See Notes on Sht. No. S-38.

ORIGINAL PLAN	SURVEY PLOTTED BY	DATE
	DRAWN BY	
	TRACED BY	
NOTE BOOK	DESIGNED BY	
	QUANTITIES BY	
No.	CHECKED BY	

J:/KUIHELANI/STRUCT/NW-1.dgn

HUI PANG CHEN
LICENSED PROFESSIONAL ENGINEER
No. 3865-S
HAWAII, U.S.A.

THIS WORK WAS PREPARED BY ME OR UNDER MY SUPERVISION.

STATE OF HAWAII
DEPARTMENT OF TRANSPORTATION
HIGHWAYS DIVISION

CMU NOISE WALL

PLAN & ELEVATION-11

KUIHELANI HIGHWAY WIDENING

HONOAPIILANI HIGHWAY TO PUUNENE AVENUE

FEDERAL-AID PROJECT NO. NH-0380(9)

Scale: 1' = 10' Date: Sept. 14, 2001

SHEET No. S-48 OF 54 SHEETS

FED. ROAD DIST. NO.	STATE	FED. AID PROJ. NO.	FISCAL YEAR	SHEET NO.	TOTAL SHEETS
HAWAII	HAW.	NH-0380(9)	2000	211	380

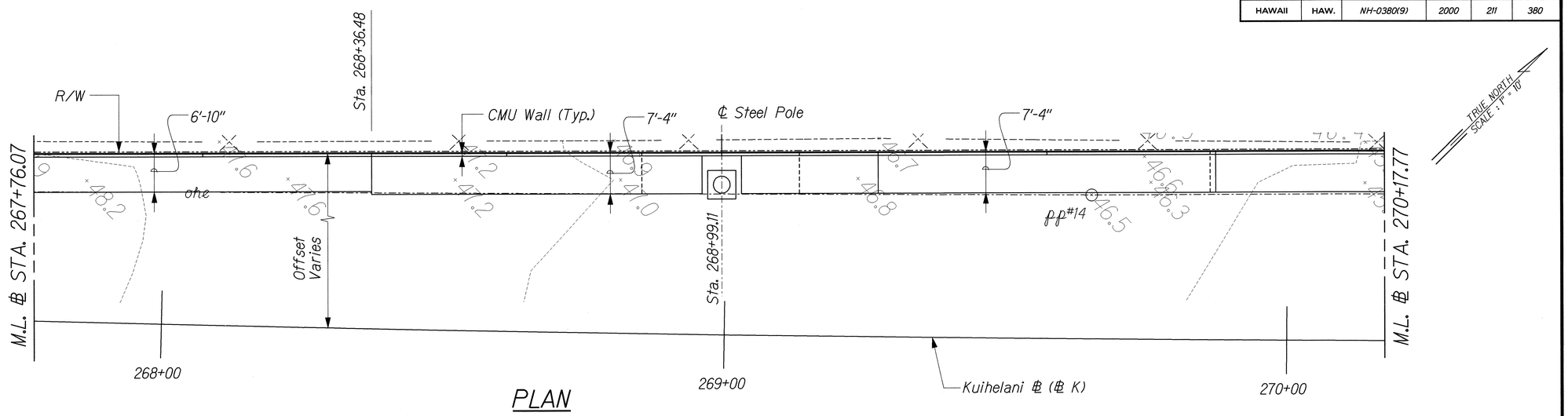

PLAN

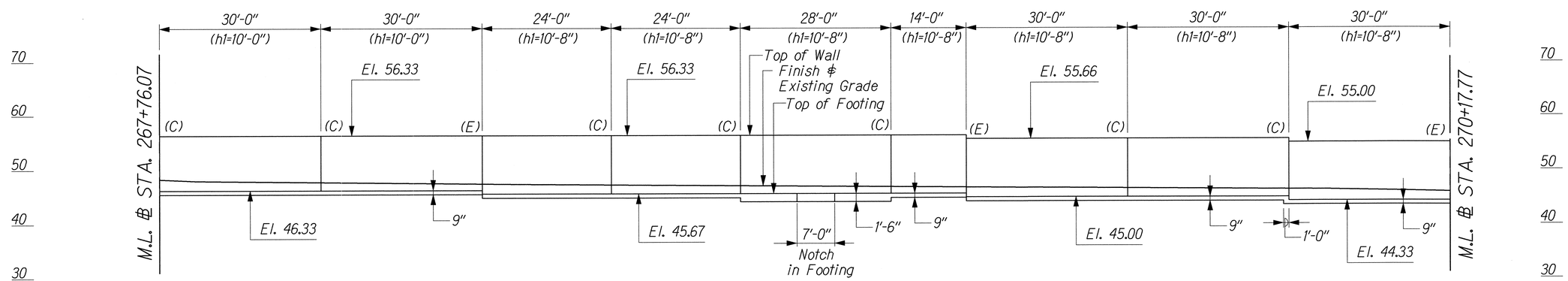

ELEVATION

NOTES:

1. See Legend on Sht. No. S-38.
2. See Notes on Sht. No. S-38.

ORIGINAL PLAN | SURVEY PLOTTED BY | DRAWN BY | TRACED BY | DESIGNED BY | QUANTITIES BY | CHECKED BY | DATE | NOTE BOOK No.

J:/KUIHELANI/STRUCT/NW-12.dgn

HU PANG CHEN LICENSED PROFESSIONAL ENGINEER No. 3865-S HAWAII, U.S.A.

THIS WORK WAS PREPARED BY ME OR UNDER MY SUPERVISION.

Hu Pang Chen

STATE OF HAWAII
DEPARTMENT OF TRANSPORTATION
HIGHWAYS DIVISION

CMU NOISE WALL
PLAN & ELEVATION-12
KUIHELANI HIGHWAY WIDENING
HONOAPIILANI HIGHWAY TO PUUNENE AVENUE
FEDERAL-AID PROJECT NO. NH-0380(9)

Scale: 1" = 10' Date: Sept. 14, 2001

SHEET No. S-49 OF 54 SHEETS

FED. ROAD DIST. NO.	STATE	FED. AID PROJ. NO.	FISCAL YEAR	SHEET NO.	TOTAL SHEETS
HAWAII	HAW.	NH-0380(9)	2000	212	380

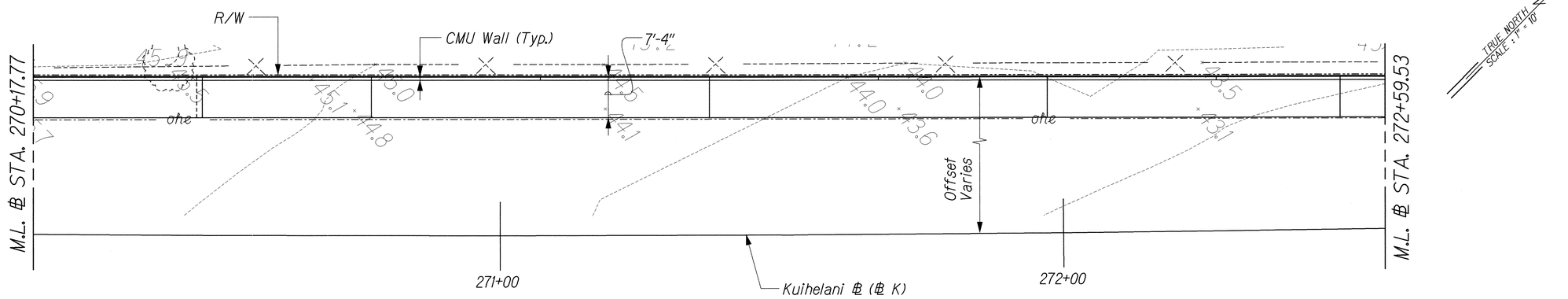

PLAN

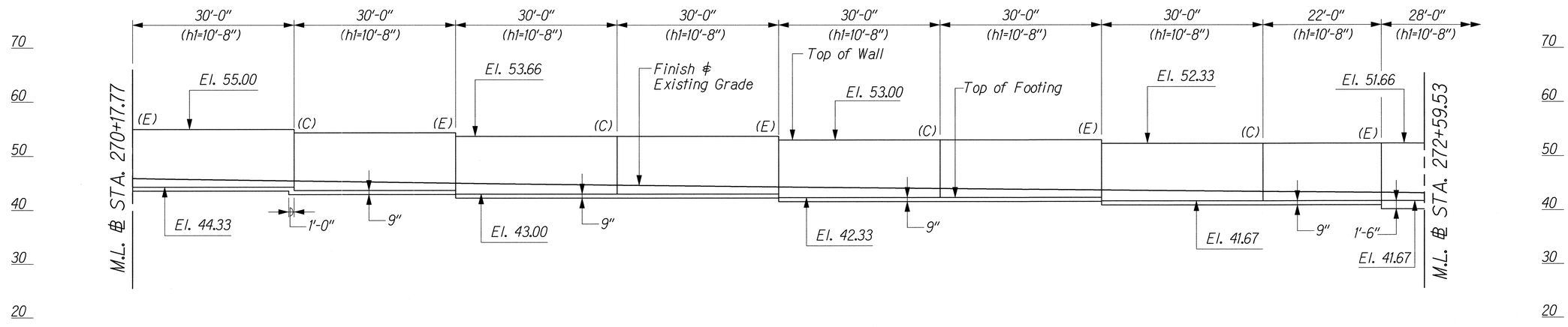

ELEVATION

NOTES:

1. See Legend on Sht. No. S-38.
2. See Notes 1, 2, and 4 on Sht. No. S-38.

ORIGINAL PLAN	SURVEY PLOTTED BY	DATE
	DRAWN BY	
	TRACED BY	
NOTE BOOK	DESIGNED BY	
	QUANTITIES BY	
No.	CHECKED BY	

J:/KUIHELANI/STRUCT/NW-13.dgn

HUI PANG CHEN LICENSED PROFESSIONAL ENGINEER No. 3865-S HAWAII, U.S.A.

THIS WORK WAS PREPARED BY ME OR UNDER MY SUPERVISION.

STATE OF HAWAII
DEPARTMENT OF TRANSPORTATION
HIGHWAYS DIVISION

CMU NOISE WALL
PLAN & ELEVATION-13
KUIHELANI HIGHWAY WIDENING
HONOAPIILANI HIGHWAY TO PUUNENE AVENUE
FEDERAL-AID PROJECT NO. NH-0380(9)

Scale: 1" = 10' Date: Sept. 14, 2001

SHEET No. S-50 OF 54 SHEETS

FED. ROAD DIST. NO.	STATE	FED. AID PROJ. NO.	FISCAL YEAR	SHEET NO.	TOTAL SHEETS
HAWAII	HAW.	NH-0380(9)	2000	213	380

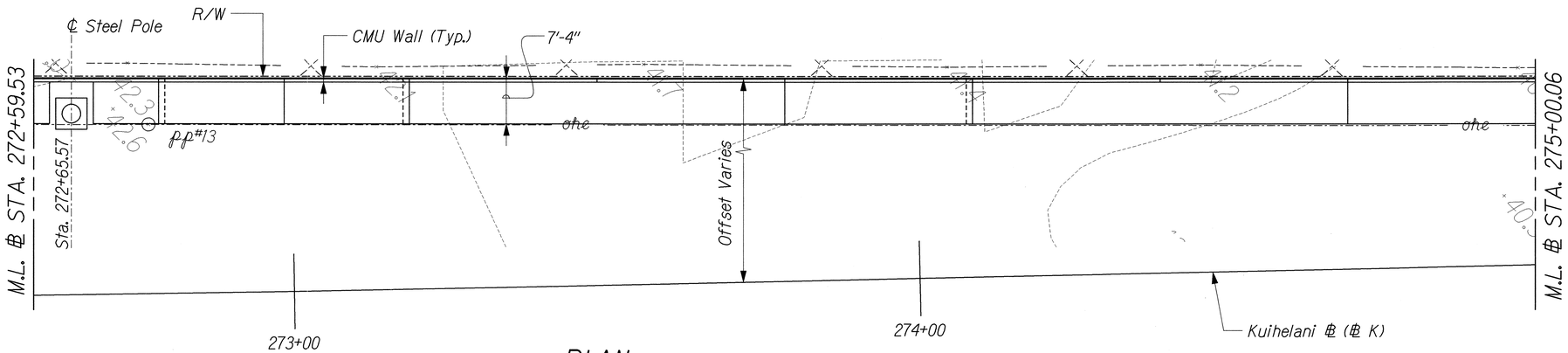

TRUE NORTH
SCALE : 1" = 10'

PLAN

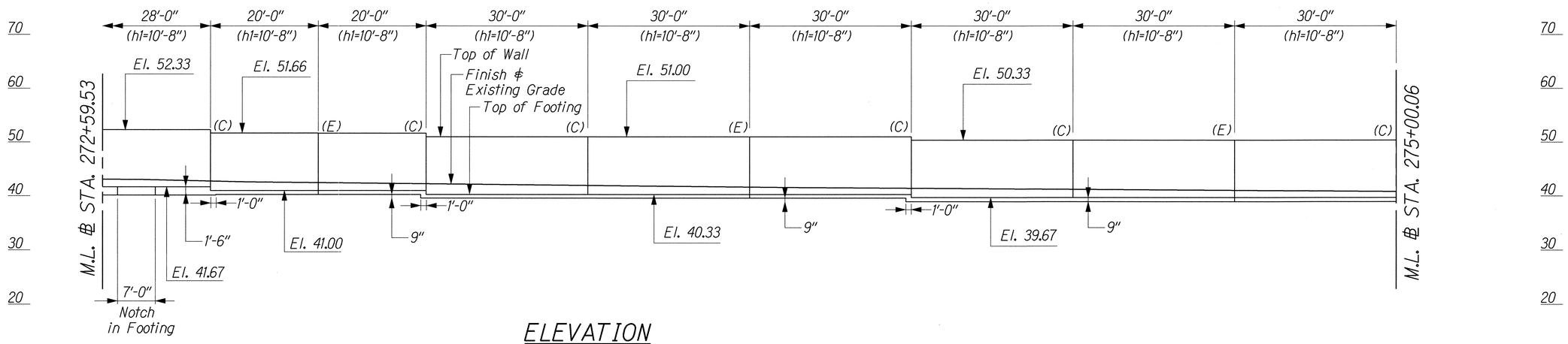

ELEVATION

NOTES:

1. See Legend on Sht. No. S-38.
2. See Notes on Sht. No. S-38.

ORIGINAL PLAN	SURVEY PLOTTED BY	DATE
	DRAWN BY	
	TRACED BY	
NOTE BOOK	DESIGNED BY	
	QUANTITIES BY	
No.	CHECKED BY	

J:/KUIHELANI/STRUCT/NW-14.dgn

HUI PANG CHEN
LICENSED PROFESSIONAL ENGINEER
No. 3865-S
HAWAII, U.S.A.

THIS WORK WAS PREPARED BY ME OR UNDER MY SUPERVISION

Huipang Chen

STATE OF HAWAII
DEPARTMENT OF TRANSPORTATION
HIGHWAYS DIVISION

CMU NOISE WALL
PLAN & ELEVATION-14
KUIHELANI HIGHWAY WIDENING
HONOAPIILANI HIGHWAY TO PUUNENE AVENUE
FEDERAL-AID PROJECT NO. NH-0380(9)
Scale: 1" = 10' Date: Sept. 14, 2001

SHEET No. S-51 OF 54 SHEETS

FED. ROAD DIST. NO.	STATE	FED. AID PROJ. NO.	FISCAL YEAR	SHEET NO.	TOTAL SHEETS
HAWAII	HAW.	NH-0380(9)	2000	214	380

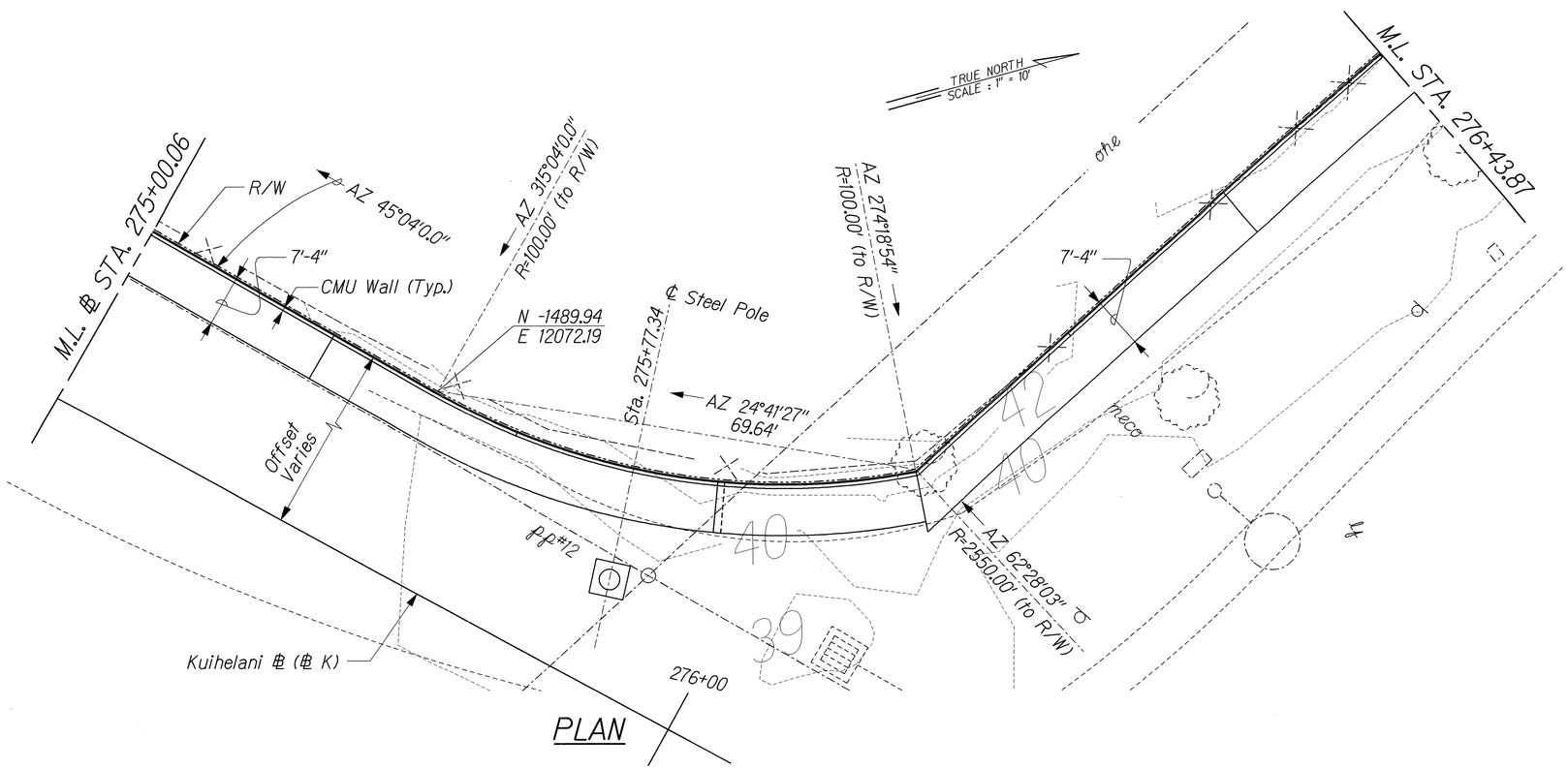

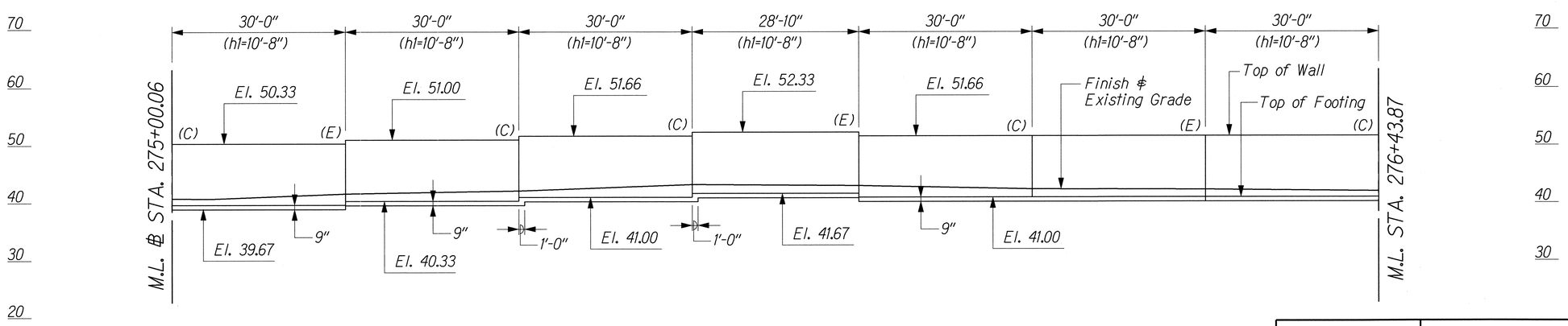

DEVELOPED ELEVATION

NOTES:

1. See Legend on Sht. No. S-38.
2. See Notes 2 and 4 on Sht. No. S-38.

ORIGINAL PLAN	SURVEY PLOTTED BY	DATE
	DRAWN BY	
	TRACED BY	
NOTE BOOK	DESIGNED BY	
	QUANTITIES BY	
No.	CHECKED BY	

J:/KUIHELANI/STRUCT/NW-15.dgn

HU PANG CHEN
LICENSED PROFESSIONAL ENGINEER
No. 3865-S
HAWAII, U.S.A.

THIS WORK WAS PREPARED BY ME OR UNDER MY SUPERVISION.

Hupang Chen

STATE OF HAWAII
DEPARTMENT OF TRANSPORTATION
HIGHWAYS DIVISION

CMU NOISE WALL
PLAN & ELEVATION-15
KUIHELANI HIGHWAY WIDENING
HONOAPIILANI HIGHWAY TO PUUNENE AVENUE
FEDERAL-AID PROJECT NO. NH-0380(9)

Scale: 1" = 10' Date: Sept. 14, 2001

SHEET No. S-52 OF 54 SHEETS

FED. ROAD DIST. NO.	STATE	FED. AID PROJ. NO.	FISCAL YEAR	SHEET NO.	TOTAL SHEETS
HAWAII	HAW.	NH-0380(9)	2000	215	380

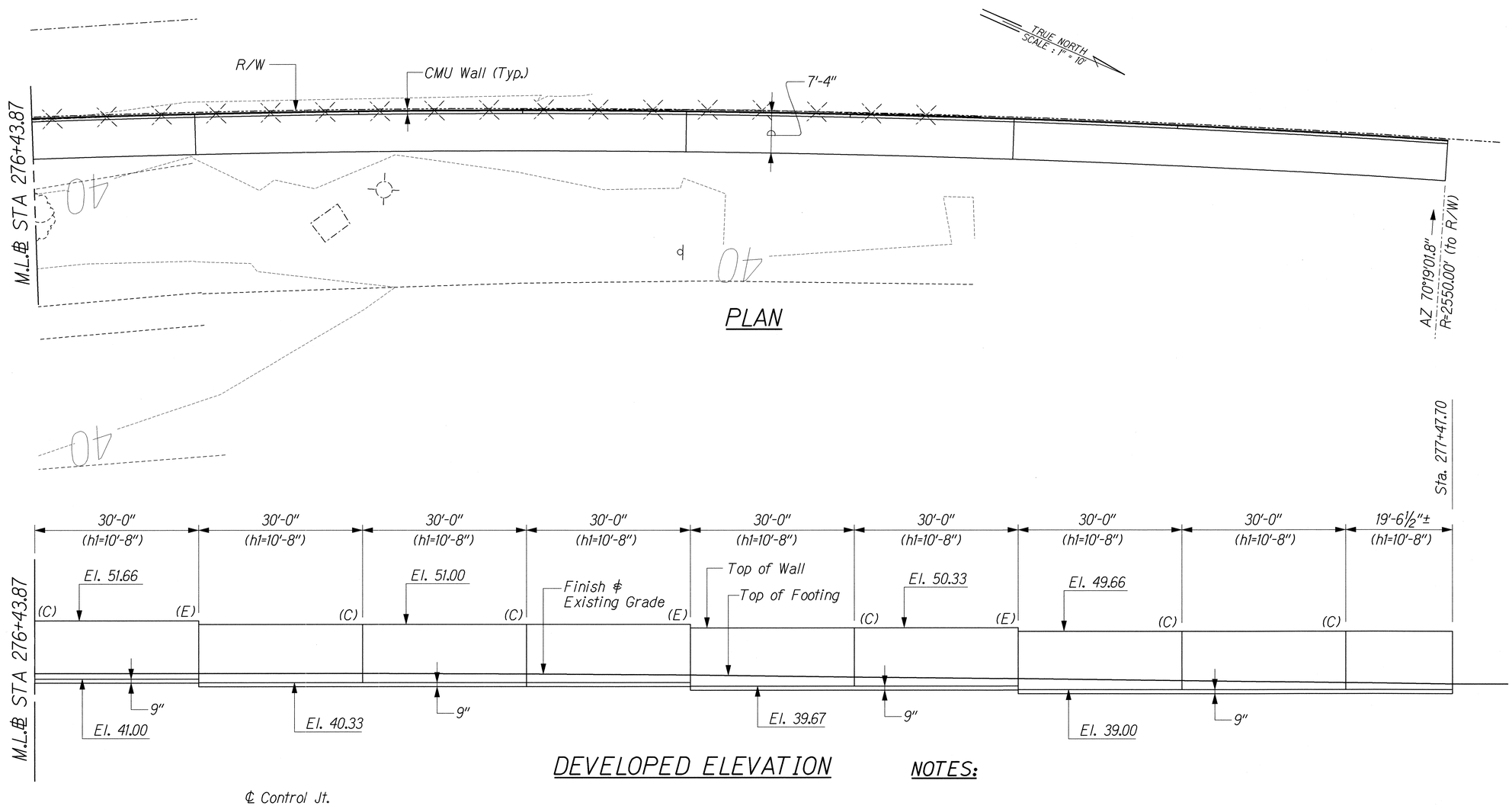

NOTES:

1. See Legend on Sht. No. S-38.
2. See Notes 2 and 4 on Sht. No. S-38.

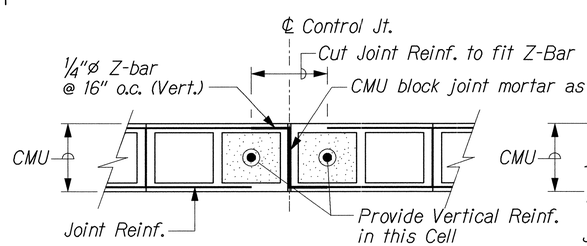

CMU CONTROL JOINT DETAIL
Not to Scale

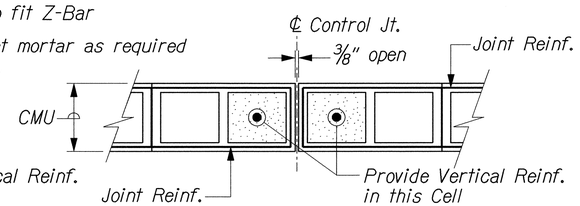

CMU EXPANSION JOINT DETAIL
Not to Scale

HU PANG CHEN
LICENSED PROFESSIONAL ENGINEER
No. 3865-S
HAWAII, U.S.A.

THIS WORK WAS PREPARED BY ME OR UNDER MY SUPERVISION

STATE OF HAWAII
DEPARTMENT OF TRANSPORTATION
HIGHWAYS DIVISION

CMU NOISE WALL
PLAN & ELEVATION-16
KUIHELANI HIGHWAY WIDENING
HONOAPIILANI HIGHWAY TO PUUNENE AVENUE
FEDERAL-AID PROJECT NO. NH-0380(9)

Scale: 1" = 10' Date: Sept. 14, 2001

SHEET No. S-53 OF 54 SHEETS

ORIGINAL PLAN | SURVEY PLOTTED BY | DRAFTED BY | TRACED BY | DESIGNED BY | QUANTITIES BY | CHECKED BY | DATE | NOTE BOOK No.

Jr/KUIHELANI/STRUCT/NW-16.dgn

FED. ROAD DIST. NO.	STATE	FED. AID PROJ. NO.	FISCAL YEAR	SHEET NO.	TOTAL SHEETS
HAWAII	HAW.	NH-0380(9)	2000	216	380

NOISE WALL TABLE

Station Locations	H	h1	h2	h3	L	T	Bar "a"	Bar "b"	Bar "c"
256+37.78 to 256+86.00	6'-4"	8'-0"	6'-0"	2'-0"	5'-5"	9"	#4 @ 16"	#4 @ 16"	#4 @ 16"
256+85.95 to 257+13.95	6'-4"	8'-0"	6'-0"	2'-0"	5'-5"	1'-6"	#4 @ 8"	#4 @ 8"	#4 @ 16"
257+14.00 to 259+37.63	6'-4"	8'-0"	6'-0"	2'-0"	5'-5"	9"	#4 @ 16"	#4 @ 16"	#4 @ 16"
247+37.78 to 247+86.00	7'-0"	8'-8"	6'-0"	2'-8"	5'-11"	9"	#4 @ 16"	#4 @ 16"	#4 @ 16"
247+86.00 to 248+14.00	7'-0"	8'-8"	6'-0"	2'-8"	5'-11"	1'-6"	#4 @ 8"	#4 @ 8"	#4 @ 16"
248+14.00 to 250+86.00	7'-0"	8'-8"	6'-0"	2'-8"	5'-11"	9"	#4 @ 16"	#4 @ 16"	#4 @ 16"
250+85.95 to 251+13.95	7'-0"	8'-8"	6'-0"	2'-8"	5'-11"	1'-6"	#4 @ 8"	#4 @ 8"	#4 @ 16"
251+14.00 to 252+37.78	7'-0"	8'-8"	6'-0"	2'-8"	5'-11"	9"	#4 @ 16"	#4 @ 16"	#4 @ 16"
254+37.78 to 256+37.78	7'-0"	8'-8"	6'-0"	2'-8"	5'-11"	9"	#4 @ 16"	#4 @ 16"	#4 @ 16"
243+37.78 to 244+85.94	8'-4"	10'-0"	6'-0"	4'-0"	6'-10"	9"	#4 @ 8"	#4 @ 16"	#4 @ 16"
244+85.94 to 245+13.94	8'-4"	10'-0"	6'-0"	4'-0"	6'-10"	1'-6"	#4 @ 8"	#4 @ 8"	#4 @ 8"
245+13.94 to 247+37.78	8'-4"	10'-0"	6'-0"	4'-0"	6'-10"	9"	#4 @ 8"	#4 @ 16"	#4 @ 16"
252+37.78 to 253+85.95	8'-4"	10'-0"	6'-0"	4'-0"	6'-10"	9"	#4 @ 8"	#4 @ 16"	#4 @ 16"
253+85.95 to 254+13.95	8'-4"	10'-0"	6'-0"	4'-0"	6'-10"	1'-6"	#4 @ 8"	#4 @ 8"	#4 @ 8"
254+13.95 to 254+37.78	8'-4"	10'-0"	6'-0"	4'-0"	6'-10"	9"	#4 @ 8"	#4 @ 16"	#4 @ 16"
259+37.63 to 259+85.94	8'-4"	10'-0"	6'-0"	4'-0"	6'-10"	9"	#4 @ 8"	#4 @ 16"	#4 @ 16"
259+85.94 to 260+13.94	8'-4"	10'-0"	6'-0"	4'-0"	6'-10"	1'-6"	#4 @ 8"	#4 @ 8"	#4 @ 8"
260+13.94 to 262+84.19	8'-4"	10'-0"	6'-0"	4'-0"	6'-10"	9"	#4 @ 8"	#4 @ 16"	#4 @ 16"
262+84.19 to 263+12.19	8'-4"	10'-0"	6'-0"	4'-0"	6'-10"	1'-6"	#4 @ 8"	#4 @ 8"	#4 @ 8"
263+12.19 to 263+35.82	8'-4"	10'-0"	6'-0"	4'-0"	6'-10"	9"	#4 @ 8"	#4 @ 16"	#4 @ 16"
264+35.24 to 265+83.46	8'-4"	10'-0"	6'-0"	4'-0"	6'-10"	9"	#4 @ 8"	#4 @ 16"	#4 @ 16"
265+83.46 to 266+11.46	8'-4"	10'-0"	6'-0"	4'-0"	6'-10"	1'-6"	#4 @ 8"	#4 @ 8"	#4 @ 8"
266+11.46 to 268+36.48	8'-4"	10'-0"	6'-0"	4'-0"	6'-10"	9"	#4 @ 8"	#4 @ 16"	#4 @ 16"
241+37.78 to 242+93.94	9'-0"	10'-8"	6'-0"	4'-8"	7'-4"	9"	#4 @ 8"	#4 @ 8"	#4 @ 16"
242+93.94 to 243+21.94	9'-0"	10'-8"	6'-0"	4'-8"	7'-4"	1'-6"	#4 @ 8"	#4 @ 8"	#4 @ 8"
243+21.94 to 243+37.78	9'-0"	10'-8"	6'-0"	4'-8"	7'-4"	9"	#4 @ 8"	#4 @ 8"	#4 @ 16"
263+35.82 to 264+35.24	9'-0"	10'-8"	6'-0"	4'-8"	7'-4"	9"	#4 @ 8"	#4 @ 8"	#4 @ 16"
268+36.48 to 268+85.11	9'-0"	10'-8"	6'-0"	4'-8"	7'-4"	9"	#4 @ 8"	#4 @ 8"	#4 @ 16"
268+85.11 to 269+13.11	9'-0"	10'-8"	6'-0"	4'-8"	7'-4"	1'-6"	#4 @ 8"	#4 @ 8"	#4 @ 8"
269+13.11 to 272+51.57	9'-0"	10'-8"	6'-0"	4'-8"	7'-4"	9"	#4 @ 8"	#4 @ 8"	#4 @ 16"
272+51.57 to 272+79.57	9'-0"	10'-8"	6'-0"	4'-8"	7'-4"	1'-6"	#4 @ 8"	#4 @ 8"	#4 @ 8"
272+79.57 to 277+47.70	9'-0"	10'-8"	6'-0"	4'-8"	7'-4"	9"	#4 @ 8"	#4 @ 8"	#4 @ 16"

CMU NOISE WALL NOTES:

1. Only Type M Mortar shall be used for CMU wall. The minimum ultimate compressive strength of mortar at 28 days shall be 2500 psi.
2. The CMU (Concrete Masonry Unit) shall be Smooth Surface Hollow Concrete Units - Grade N, grouted solid as required. The minimum ultimate compressive strength of CMU at 28 days (F'm) shall be 1500 psi.
3. All rebars shall be ASTM A 615, Grade 60. Joint reinforcement (wire) shall be ASTM A 82.
4. All cells below grade and/or containing vertical reinforcement shall be filled solidly with grout. The minimum ultimate compressive strength of grout at 28 days shall be 2000 psi.
5. For construction requirements for concrete masonry unit placing, see Special Provisions.
6. The horizontal and vertical mortar joints between CMU's shall be tooled to concave finish at all exposed faces.
7. At the time of laying, all masonry units shall be free of excessive dust and dirt.
8. The space between the CMU wall and excavated existing ground shall be backfilled with Class D concrete.
9. The strength of footing concrete, See Note 4 A(2) on Sht. No. S-2.

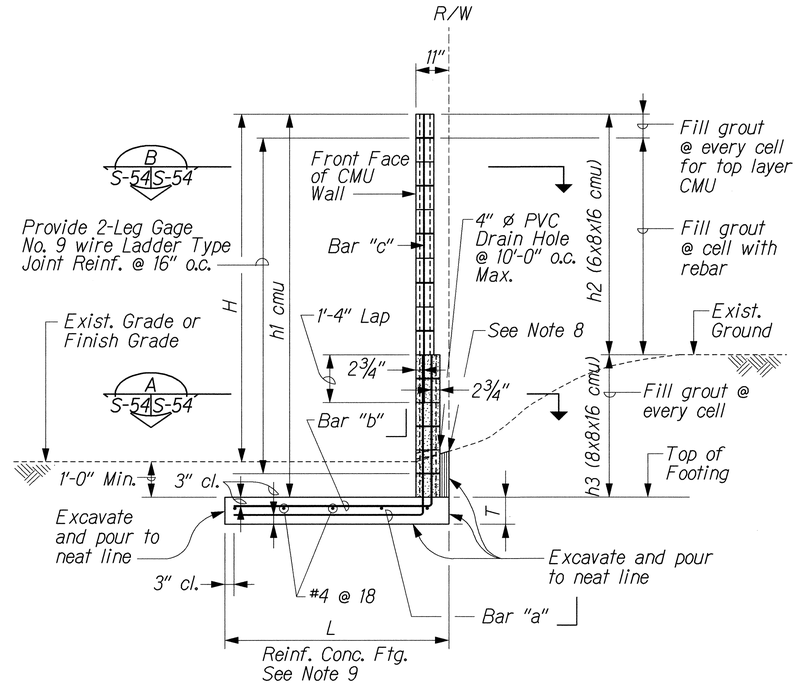

TYPICAL SECTION FOR CMU NOISE WALL

Scale: ½" = 1'-0"

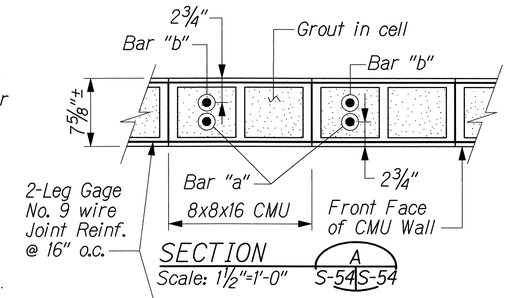

SECTION A S-54 S-54
Scale: 1½"=1'-0"

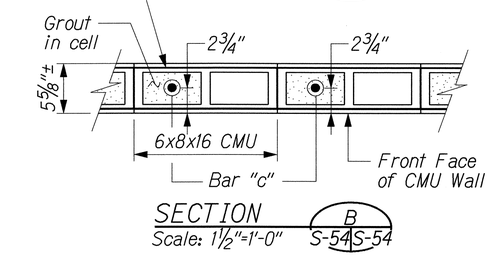

SECTION B S-54 S-54
Scale: 1½"=1'-0"

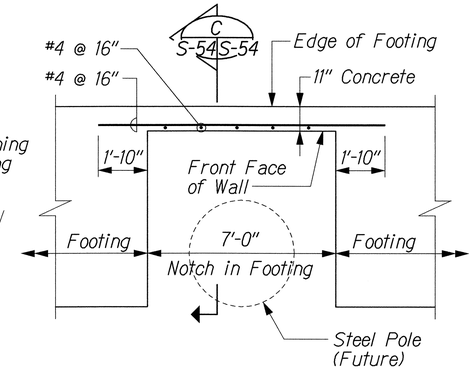

PARTIAL WALL PLAN @ STEEL POLE

Not to Scale

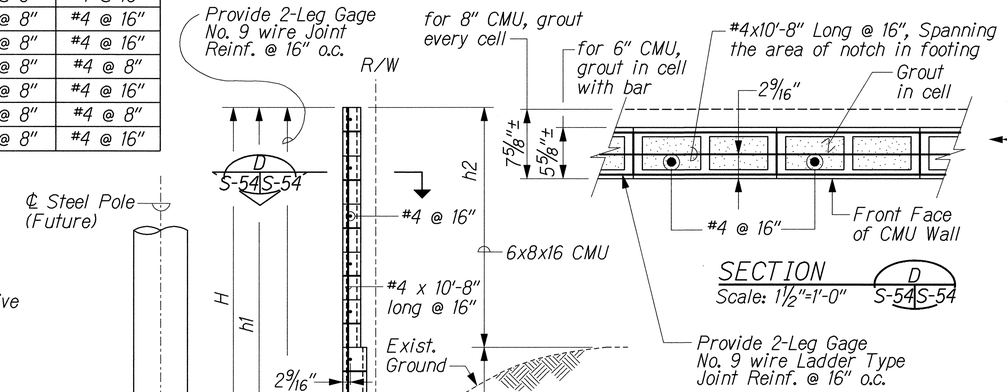

SECTION D S-54 S-54
Scale: 1½"=1'-0"

SECTION C S-54 S-54
Scale: ½"=1'-0"

ORIGINAL PLAN	SURVEY PLOTTED BY	DATE
	DRAWN BY	
	TRACED BY	
NOTE BOOK	DESIGNED BY	
	QUANTITIES BY	
No.	CHECKED BY	

J:/KUIHELANI/STRUCT/rw-det.dgn

HU PANG CHEN LICENSED PROFESSIONAL ENGINEER No. 3865-S HAWAII, U.S.A.

THIS WORK WAS PREPARED BY ME OR UNDER MY SUPERVISION.

STATE OF HAWAII
DEPARTMENT OF TRANSPORTATION
HIGHWAYS DIVISION

CMU NOISE WALL DETAILS

KUIHELANI HIGHWAY WIDENING
HONOAPIILANI HIGHWAY TO PUUNENE AVENUE
FEDERAL-AID PROJECT NO. NH-0380(9)

Scale: ½" = 1'-0" Date: Sept. 14, 2001

SHEET No. S-54 OF 54 SHEETS