FED. ROAD DIST. NO.	STATE	PROJ. NO.	FISCAL YEAR	SHEET NO.	TOTAL SHEETS
HAWAII	HAW.	360B-01-09M	2008	7	21

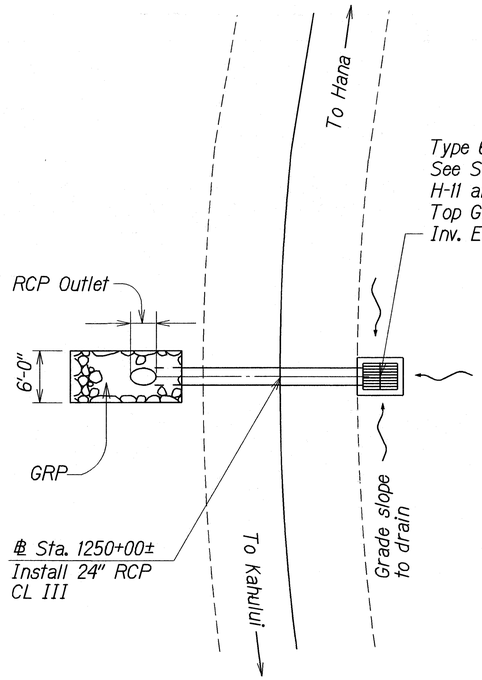

PLAN
Not To Scale

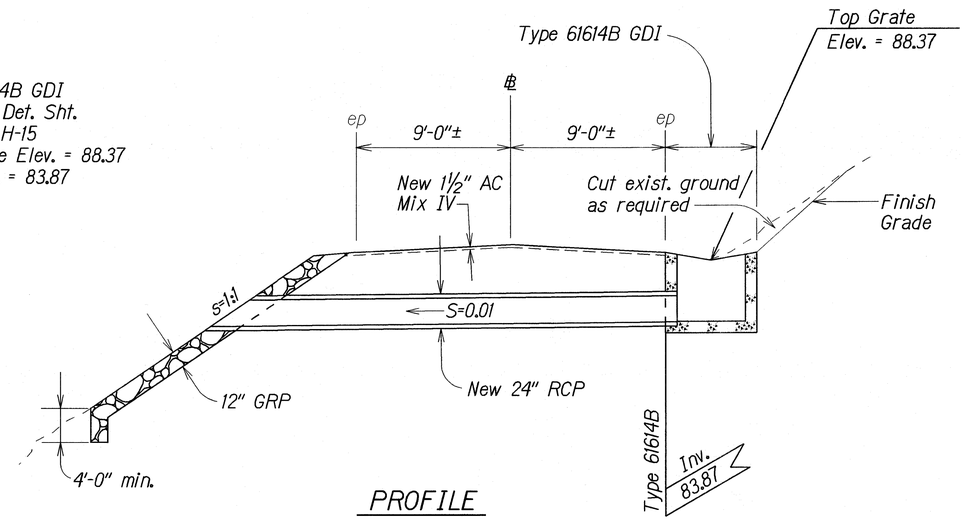

PROFILE
Not To Scale

24" RCP @ STA. 1250+00±

DRAINAGE NOTES:

1. Existing drainage system will be functional at all times during construction. Contractor is to furnish materials, equipment, labor, tools and incidentals necessary to accomplish maintenance of flow, the cost of which shall be incidental to the various contract items.
2. Demolishing and/or removing a portion or the entire existing structure shall not be paid for separately, but shall considered incidental to the various contract items.
3. Culverts within the grated drop inlets shall be cut flush with the inside face of the wall. Above work shall be considered incidental to the various contract items.
4. Contractor shall verify the locations of all culverts in the field. Any culvert damaged during construction shall be repaired or replaced by the Contractor at his expense.
5. Concrete for grated drop inlets and other structures shall be Class "A".
6. Inlet and Outlet conditions shall be cleaned and graded to permit free flow of run-off or as directed by the Engineer. Cleaning and grading shall be to the satisfaction of the Engineer. Above work shall be considered incidental to the various contract items.
7. Location and elevations of new structures must be laid out in the field for the Engineer's approval.
8. Chamfer all exposed edges 1".

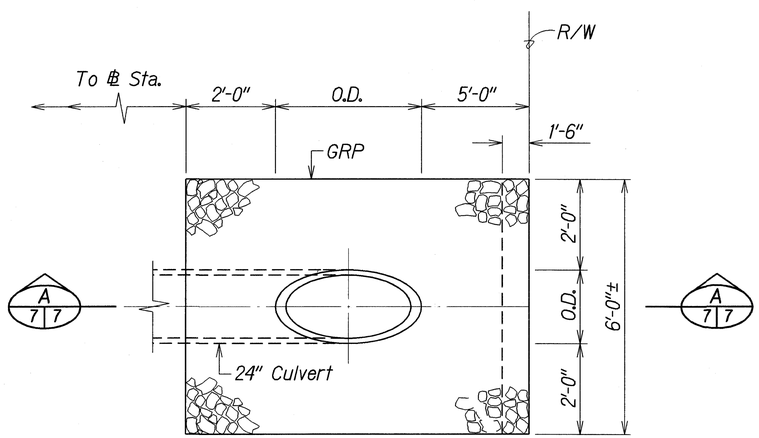

PLAN

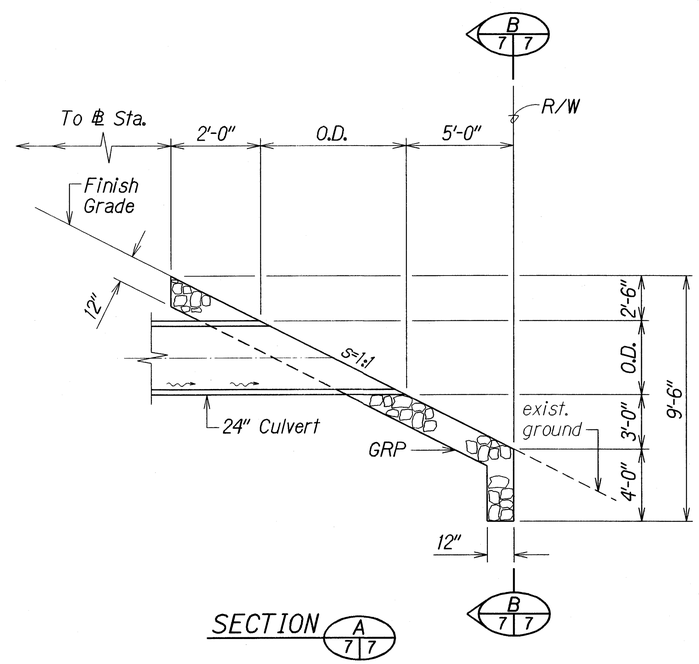

SECTION A 7 | 7

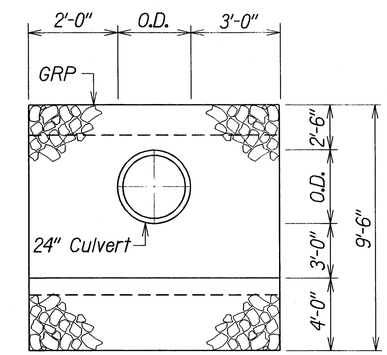

SECTION B 7 | 7

DETAILS OF GRP OUTLET STRUCTURE @ STA. 1250+00±

Not To Scale

ORIGINAL PLAN	SURVEY PLOTTED BY	DATE 02/08
	TRACED BY	
	DESIGNED BY	
NOTE BOOK	QUANTITIES BY	
	CHECKED BY	
SHEET No.		

STATE OF HAWAII
DEPARTMENT OF TRANSPORTATION
HIGHWAYS DIVISION

DRAINAGE DETAILS

HANA HIGHWAY RESURFACING
Kahalaowaka Bridge to Oilowai Bridge
Project No. 360B-01-09M

Scale: As Shown Date: September, 2008

SHEET No. 1 OF 1 SHEETS