FED. ROAD DIST. NO.	STATE	PROJ. NO.	FISCAL YEAR	SHEET NO.	TOTAL SHEETS
HAWAII	HAW.	360AB-02-00	2003	33	33

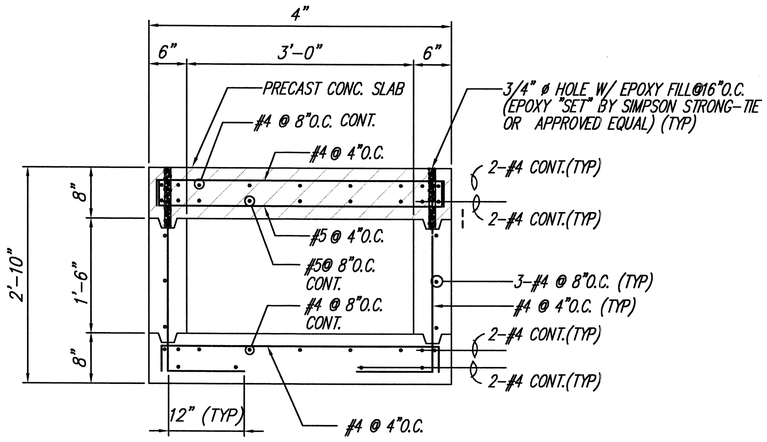

NOTE: SEE CIVIL DRAWINGS FOR CULVERT LOCATION

CONCRETE CULVERT SECTION

SCALE: 1-1/2 = 1'-0"

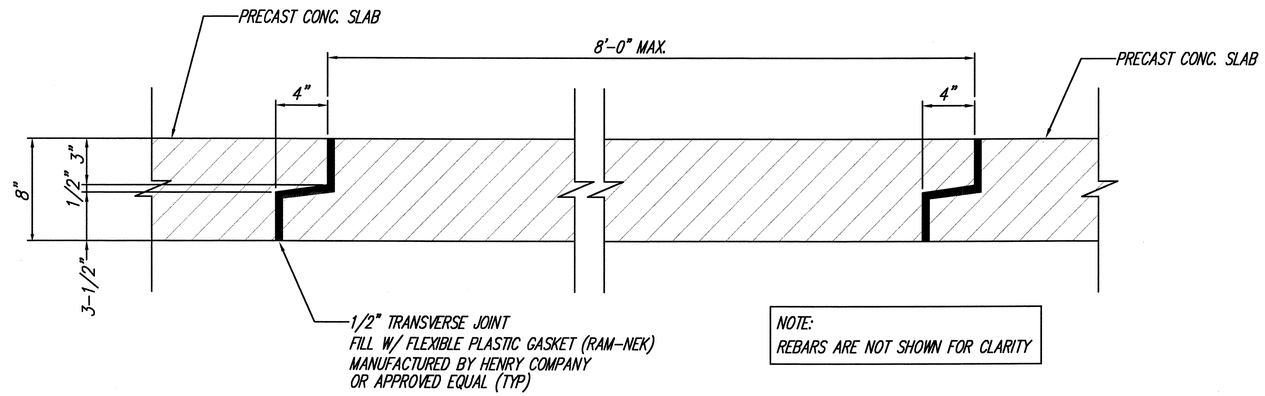

NOTE:
REBARS ARE NOT SHOWN FOR CLARITY

JOINT DETAIL AT PRECAST CONCRETE TOP SLAB

SCALE: 3" = 1'-0"

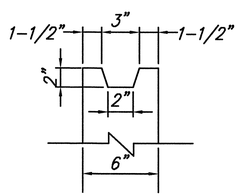

JOINT SHEAR KEY DETAIL

SCALE: 3"= 1'-0"

ORIGINAL PLAN
SURVEY PLOTTED BY ____ DATE
DRAWN BY : : : :
TRACED BY
DESIGNED BY
QUANTITIES BY
CHECKED BY
NOTE BOOK
No.

JONG NAMGUNG
LICENSED PROFESSIONAL ENGINEER
No. 3513-S
HAWAII, U.S.A.

THIS WORK WAS PREPARED BY ME OR UNDER MY SUPERVISION.

Jong Namgung

Mitsunaga & Associates, Inc.

STATE OF HAWAII
DEPARTMENT OF TRANSPORTATION
HIGHWAYS DIVISION

CONCRETE CULVERT DETAILS

HANA HIGHWAY IMPROVEMENTS
Huelo To Hana
Project No. 360AB-02-00

Scale: Date: March, 2003

SHEET No. 4 OF 4 SHEETS