FED. ROAD DIST. NO.	STATE	FED. AID PROJ. NO.	FISCAL YEAR	SHEET NO.	TOTAL SHEETS
HAWAII	HAW.	STP-0360(7)	2000	7	26

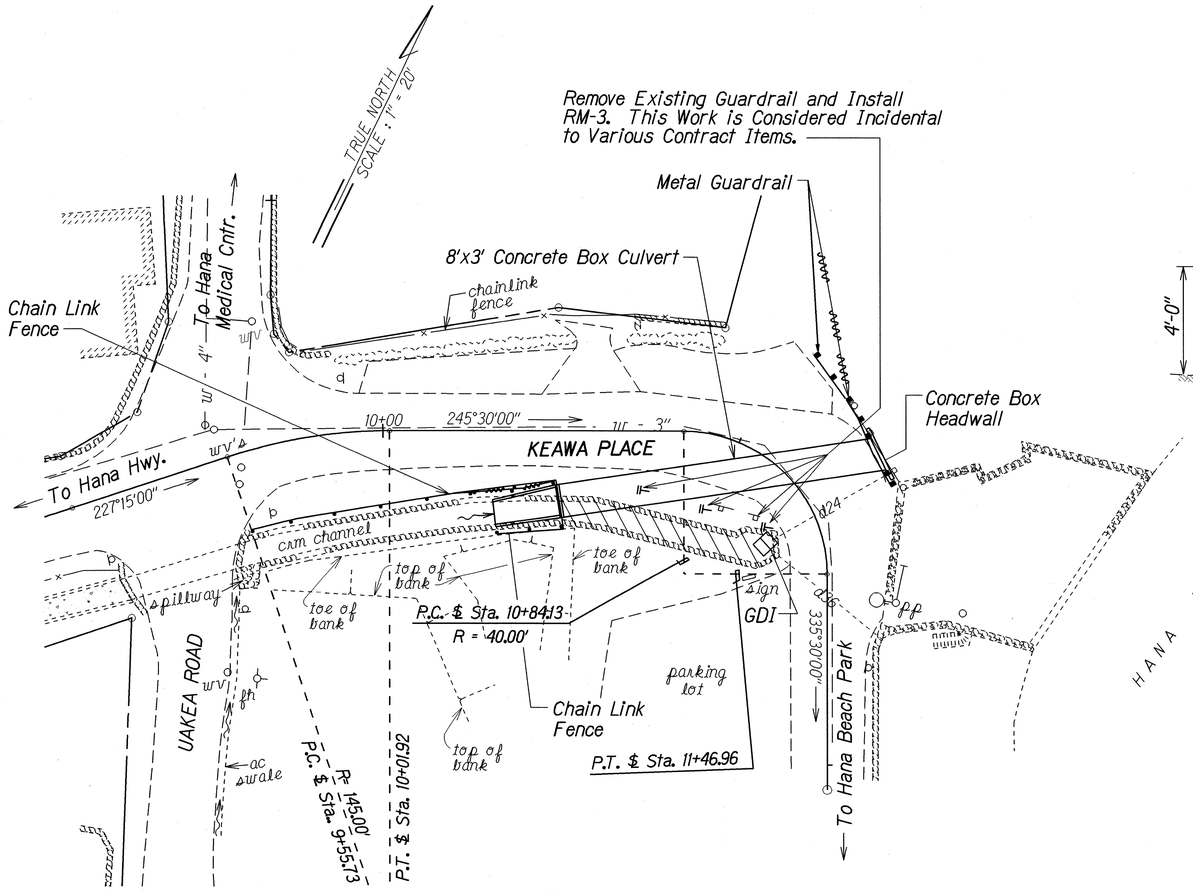

PLAN

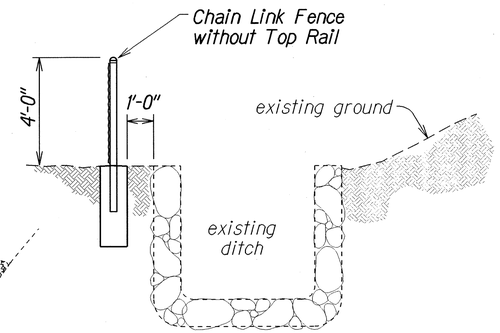

CHAIN LINK FENCE DETAIL

Not to Scale

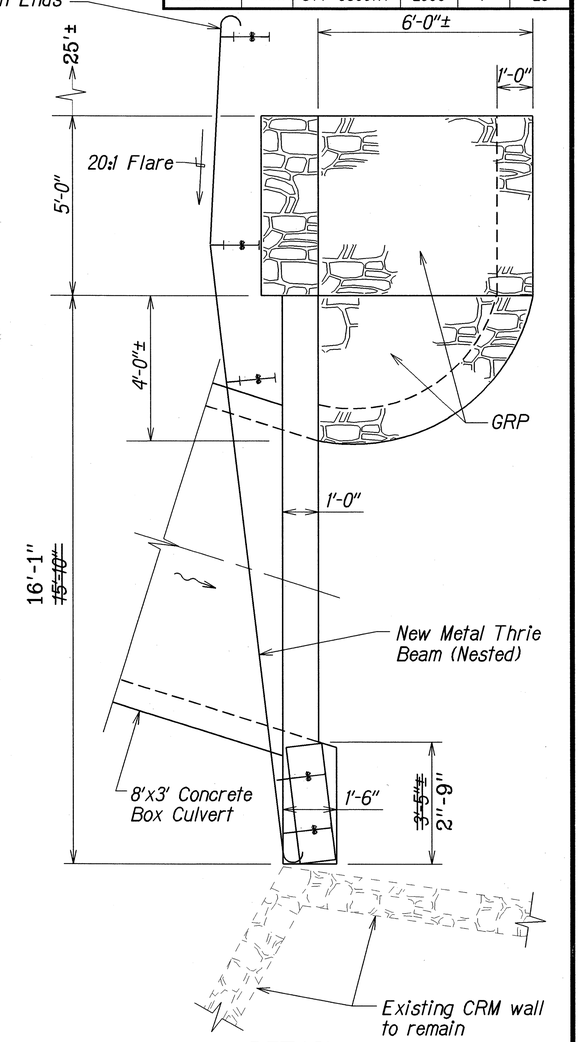

DETAIL

GUARDRAIL AT CONCRETE BOX CULVERT OUTLET HEADWALL

Scale: 1/2"=1'-0"

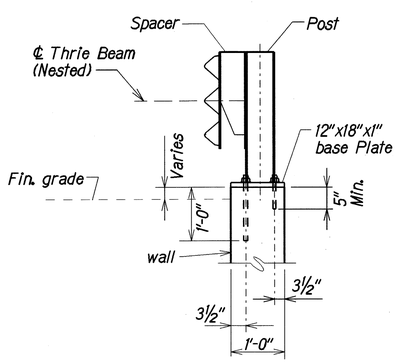

GUARDRAIL SECTION

Scale: 3/4"=1'-0"

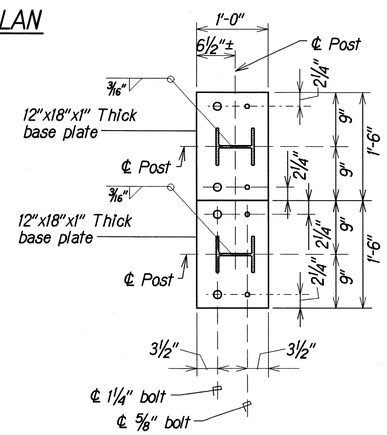

BASE PLATE DETAIL

Scale: 1"=1'-0"

GUARDRAIL NOTES:

1. All metal guardrail elements including nested rail, post, end section, anchor plate, bolt, nut, washer, toggle bolt and other metal part, shall be hot-dipped galvanized after fabrication. Removal/disposal of existing guardrail shall be considered incidental to the guardrail item.
2. All welding shall be in accordance with the current edition of Reinforcing Steel Welding Code AWS D1.4.
3. Refer to plan sheet 8 for guardrail details.

LEGEND FOR AS-BUILT POSTINGS

~~	Squiggly line for as-built deletion
~~100.00~~	Double line for as-built deletion
Roadway	Text for as-built posting

STATE OF HAWAII
DEPARTMENT OF TRANSPORTATION
HIGHWAYS DIVISION

PLAN

GUARDRAIL & CHAIN LINK FENCE

HANA HWY. DRAINAGE IMPROVEMENTS

Vicinity of Keawa Place

Fed. Aid Project No. STP-0360(7)

Scale: As Shown Date: Sept., 1998

SHEET No. 1 OF 1 SHEETS

ORIGINAL PLAN | SURVEY PLOTTED BY | DRAWN BY G. Akharain | TRACED BY | DESIGNED BY R. Hirosaka, J. Sawa | QUANTITIES BY | CHECKED BY | DATE 12/8/98 | NOTE BOOK dd6,George N/Manimoto

"AS-BUILT"