FED. ROAD DIST. NO.	STATE	FED. AID PROJ. NO.	FISCAL YEAR	SHEET NO.	TOTAL SHEETS
HAWAII	HAW.	360AB-02-78	1978	3	9

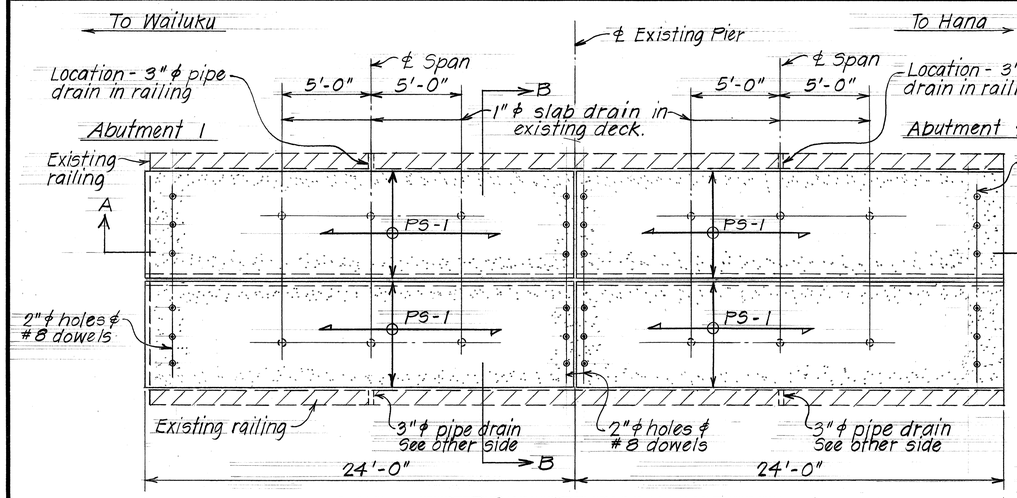

DECK PLAN Scale: 1/4" = 1'-0"

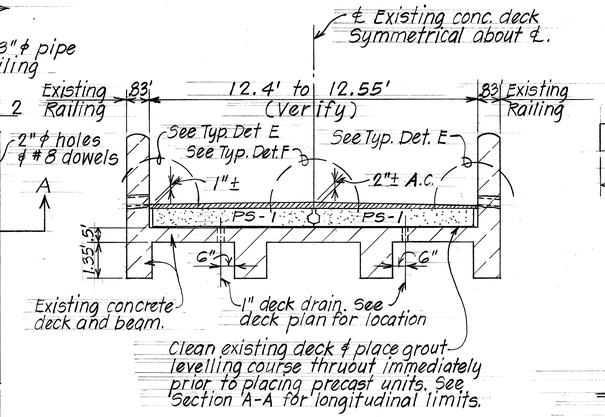

TYPICAL SECTION B-B Scale: 3/8" = 1'-0"

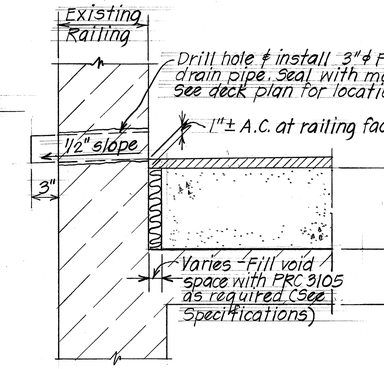

TYPICAL DETAIL E
Scale: 1 1/2" = 1'-0"

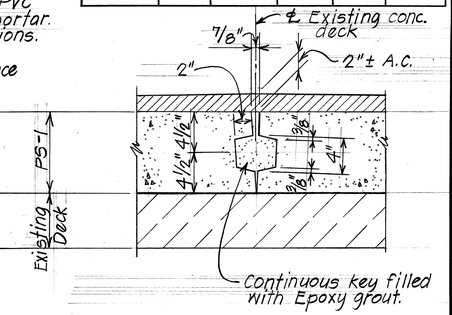

TYPICAL DETAIL F
Scale: 1 1/2" = 1'-0"

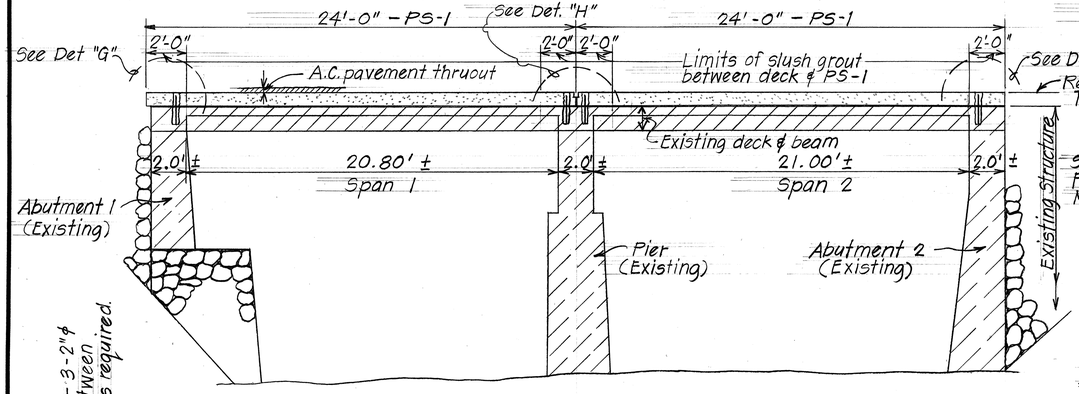

TYPICAL DECK SECTION A-A Scale: 1/4" = 1'-0"

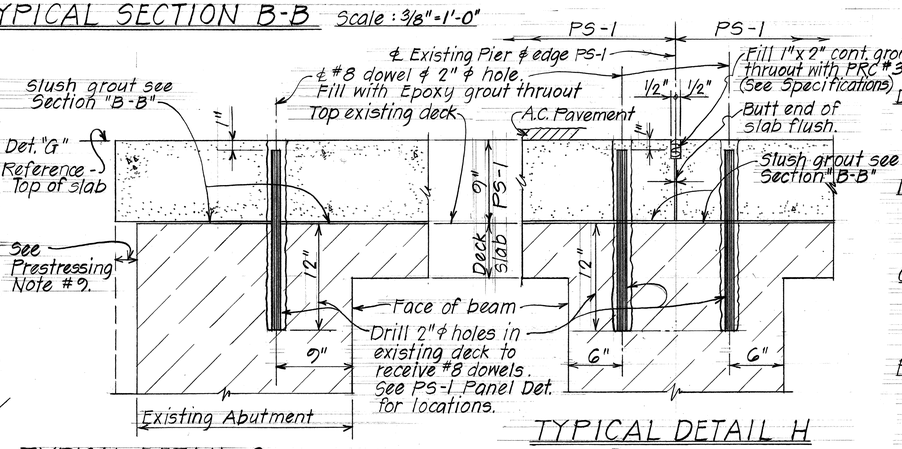

TYPICAL DETAIL G Scale: 1 1/2" = 1'-0"

TYPICAL DETAIL H
Scale: 1 1/2" = 1'-0"

GENERAL NOTES

DESIGN SPECIFICATION:
Standard Specification for Highway Bridges (11th Edition) with subsequent interim Specifications. (AASHTO).

MATERIALS:
1. Reinforcing Steel - ASTM A615 Grade 40.
2. Prestressed Slab PS-1 - See prestressing notes.

CONSTRUCTION METHOD:
See Standard Specification for Road ϕ Bridge Construction, 1976 Edition ϕ Special Provisions.

PRESTRESSING NOTES:
1. Concrete shall have a 28 day compressive strength of f'c = 5,500 psi.
2. The concrete shall attain a compressive strength f'ci = 4,500 psi before the strands are released.
3. Pretensioned strands shall be 7 wire, 1/2" ϕ, stress relieved steel strands (area = .153 sq. in.) with an ultimate strength of 270 ksi.
4. Total loss due to creep, shrinkage, elastic shortening ϕ relaxation of steel = 45,000 psi.
5. Strand pattern shall be symmetrical about longitudinal ℄ of the planks.
6. Strand release sequence shall not induce any lateral deflection of the planks.
7. Contractor shall submit his proposed strand pattern and releasing sequence to the Engineer for approval.
8. Lifting devices shall be placed as close as possible to the center line of bearing of the plank.
9. The Contractor shall verify all dimensions of existing structure before commencing w/work.

ESTIMATED QUANTITIES

ITEM NO.	ITEM	UNIT	QUANTITY
504.0500	Prestressed Concrete Slab Panels PS-1	Lump Sum	(16.3 Cu.Yd.)
401.0500	Asphalt Concrete Pavement Mix V	Ton	6.1 Tons

NOTE:
Drill holes in existing structure, reinforcing steel, 3" ϕ drain pipes, grout ϕ PRC joint filler shall be incidental to Prestressed Concrete Slab Panels PS-1 ϕ will not be paid for separately.
Refer to Plan Sheet No. 2 for Construction of approaches at each end of bridge and finish grades throughout.

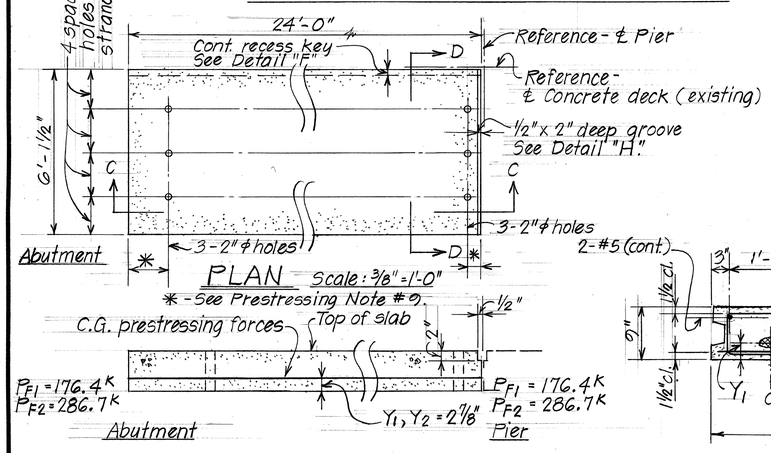

TYPICAL SECTION C-C
Scale: 3/4" = 1'-0"

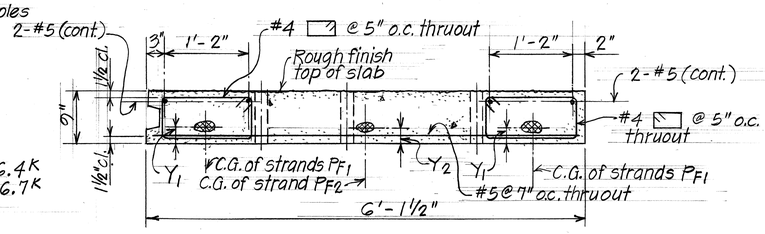

TYPICAL SECTION D-D
Scale: 1" = 1'-0"

TYPICAL PRESTRESS SLAB PANEL PS-1 (4 REQUIRED)

ORIGINAL PLAN	SURVEY PLOTTED BY	DATE
	DRAWN BY LMA	
	TRACED BY	
NOTE BOOK	DESIGNED BY KBY	
	QUANTITIES BY	
No.	CHECKED BY CRY	

STATE OF HAWAII
DEPARTMENT OF TRANSPORTATION
LAND TRANSPORTATION FACILITIES DIVISION

HONOMANU BRIDGE REPAIR

PROJECT No 360AB-02-78

SCALE: AS NOTED DATE: APR. 1978

SHEET No. 1 OF 1 SHEETS