FED. ROAD DIST. NO.	STATE	PROJ. NO.	FISCAL YEAR	SHEET NO.	TOTAL SHEETS
HAWAII	HAW.	340C-01-18M	2021	9	11

"FOR INFORMATION ONLY"
"AS-BUILT PLAN"
(WATERLINE JACKET)

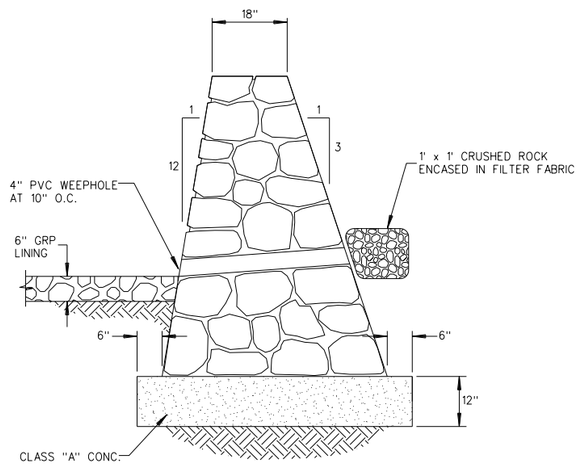

TYPICAL SECTION - BRIDGE WINGWALL RESTORATION
FOR 12 INCH TRANSMISSION LINE CROSSING
(KAHEKILI HIGHWAY)
Not To Scale

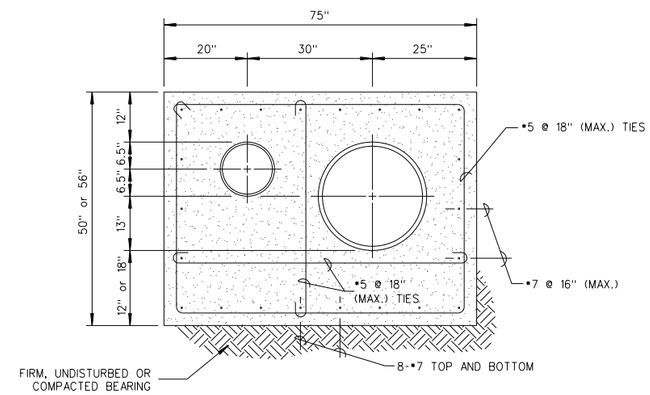

SECTION A
Not To Scale

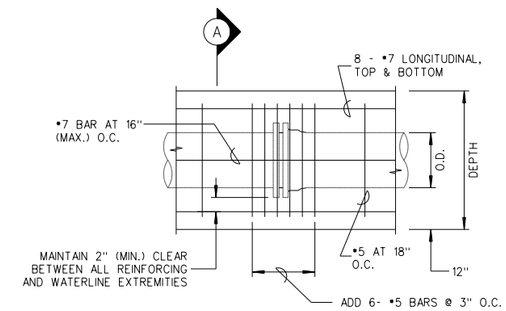

DETAIL - CONCRETE JACKET AT PIPE JOINTS
Not To Scale

ORIGINAL PLAN	SURVEY PLOTTED BY	DATE
	DRAWN BY	
	TRACED BY	
NOTE BOOK	DESIGNED BY	
	QUANTITIES BY	
No.	CHECKED BY	

STATE OF HAWAII
DEPARTMENT OF TRANSPORTATION
HIGHWAYS DIVISION

WAIHEE RIVER BRIDGE
KAHEKILI HIGHWAY
WAIHEE RIVER FLOOD REPAIRS
AT WAIHEE BRIDGE
Project No. 340C-01-18M

Date: March, 2020

SHEET No. 1 OF 3 SHEETS