GENERAL NOTES
DESIGN CRITERIA

1- DESIGN SPECIFICATIONS ARE:
AASHTO 'LRFD Bridge Desgn Specifications', 3rd Edition (2004)

2- GEOTECHNICAL REPORT:
"Soils Investigation Report for Puunene Avenue/ Mokulele Highway Widening Project, Puunene, Maui, Hawaii, by Ernest K. Hirata & Associates, Inc., W.O. 99-3144, dated October 1, 1999

3- DESIGN LOADS ARE:

A- DEAD LOADS:
- Reinforced And Prestressed Concrete ..... 0.160 kcf
- Future Asphalt ..... 0.025 ksf
- Future Utilities On Eash Side Of Bridge ..... 0.150 klf
- Soil ..... 0.120 kcf

B- LIVE LOADS HL-93 (Combined as Per Design Specifications)

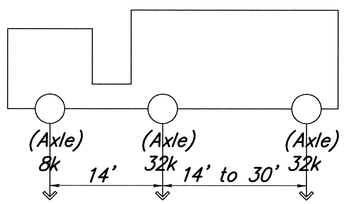

DESIGN TRUCK

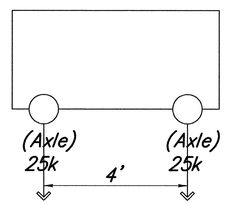

DESIGN TANDEM

UNIFORM LOAD 0.64 klf PER LANE

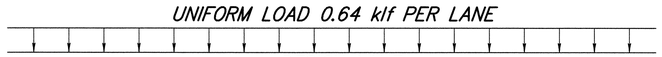

DESIGN LANE

C- DESIGN SPEED : 55 MPH

D- WIND LOADS: 100 mph Design Wind Speed At 30 ft Above The Ground For Wind Load On Structures.

E- SEISMIC LOADS:
- Acceleration Coefficient ..... 0.25 G
- Seismic Zone ..... '3'
- Importance Category ..... 'Critical'
- Soil Type ..... '1'

F- TRAFFIC RAILING LOADS: In Accordance With Railing Performance Level TL-4.

4- MATERIALS ARE:

A- CONCRETE:
- Bridge, Deck Slab and Beams, Substructure and Footings ..... f'c = 4 ksi
- Bridge Approach Slab ..... f'c = 4 ksi
- Box Culverts ..... f'c = 4 ksi
- Barriers (New & Retrofitted) ..... f'c = 4 ksi
- Retaining Walls & Footings ..... f'c = 4 ksi
- Drilled Shafts ..... f'c = 4 ksi
- Retaining Walls & Footings ..... f'c = 4 ksi
- AASHTO III Girders ..... f'ci = 6 ksi @ release; f'c = 7 ksi
- Channel Lining (Class ' A') ..... f'c = 3 ksi

These Are 28 Days Strengths Except As Noted

B. CONCRETE ADMIXTURES:

1. Shrinkage Reducing Admixture Shall Be Added To The Concrete Mixes For Bridge Deck Slabs, Approach Slabs, Bridge Railings And C.I.P. Box Culvert Top & Bottom Slabs. Refer to The Special Provisions - Part II, Section 601 "Structural Concrete".
2. Corrosion Inhibiting Admixture Shall Be Added To The Concrete Mixes For All Concrete (Except Drilled Shafts). Refer To The Special Provisions - Part II, Section 601, "Structural Concrete".

C- REINFORCING STEEL:
Per ASTM A615 Grade 60 (Unless Noted Otherwise).

D- MISCELLANEOUS STEELS:
Per ASTM A36, Hot Dipped Galvanized Per ASTM A123, Unless Noted Otherwise.

E- PRESTRESSING STEEL
1/2" ø , 7 - Wire, Low Relaxation Strand Per ASTM A416, Grade 270

F- BEARING
Elastomeric Pads Per The Design Specification

5- SOIL DESIGN PARAMETER :

A- Foundations Shall Be Designed For The Following Maximum Bearing Values:
- Service Limit State ..... 2500 psf
- Strength Limit State ..... 4500 psf
- Extreme Event Limit State ..... 7500 psf

B- Lateral Earth Pressure / Values

	Box Culverts	Retaining Walls
Active	55 pcf	45 pcf
Passive	300 pcf	300 pcf
Coefficient of Sliding Friction	0.4	

C- Drillled Shafts - See Sheet S-29 For Drilled Shaft Notes

6- DESIGN METHODS AND ALLOWABLE STRESSES ARE:

A- REINFORCED CONCRETE: Strength & Service Limit State.

B- SEISMIC DESIGN: Extreme Event Limit State.

C- BRIDGE SUPERSTRUCTURE:
Service Limit State, With Allowable Stresses.
- Initial ..... FC = 0.60 f'ci
- Initial ..... FT = 0.24 f'ci
- Final [Sum Of Effective Prestress And Permanent Loads] ..... FC = 0.45 f'c
- Final [Live Load + 1/2 Sum Of Effective Prestress And Permanent Loads] ..... FT = 0.4 f'c

REINFORCING NOTES

1- ACI STANDARD RADII SHALL BE USED TO BEND ALL REINFORCEMENT UNLESS NOTED OTHERWISE. ALL BEND DIMENSIONS GIVEN ARE OUT TO OUT OF BARS

2- BAR SPACINGS ARE GIVEN IN INCHES UNLESS NOTED OTHERWISE.

3- EXCEPT AS NOTED ON THE PLANS, CONCRETE COVER TO REINFORCEMENT (MAIN BARS UNLESS NOTED OTHERWISE) SHALL BE:

- Bridge Deck Top, Riding Surface ..... 2 in, -0 in, +3/8"
- Bridge Deck Bottom ..... 1 1/2 in
- Abutments, Frontface ..... 2 in
- Abutments, Backface ..... 2 in
- Headwalls, Retaining Walls, Frontface ..... 2 in
- Headwalls, Retaining Walls, Backface (Formed) ..... 2 in
- Footings, Top ..... 2 in
- Footings, Bottom ..... 3 in
- Footings, Sides ..... 3 in
- Culvert Top Slab, Top & Bottom ..... 2 in
- Culvert Bottom Slab, Bottom ..... 3 in
- Culvert Bottom Slab, Top ..... 2 in
- Culvert Walls,Exterior ..... 2 in
- Culvert Walls,Interior ..... 2 in

CONSTRUCTION NOTES:

1- CONSTRUCTION SPECIFICATIONS ARE THE 'HAWAII STANDARD SPECIFICATIONS FOR ROAD, BRIDGE AND PUBLIC WORKS CONSTRUCTION' 1994, AND THE AASHTO LRFD BRIDGE CONSTRUCTION SPECIFICATIONS, 1998, AND SPECIAL PROVISIONS THERETO

2- ALL EXPOSED EDGES OF CONCRETE SHALL BE CHAMFERED 3/4 in x 3/4 in UNLESS NOTED OTHERWISE.

3- CONSTRUCTION JOINTS SHALL BE LOCATED ONLY AT THOSE LOCATIONS SHOWN ON THE PLANS, UNLESS OTHERWISE APPROVED BY THE ENGINEER.

4- THE CONTRACTOR SHALL VERIFY ALL SITE CONDITIONS AND NOT RELY UPON THESE PLANS FOR ACCESS ROAD OR STREAM LOCATION, ETC

5- THE CONTRACTOR SHALL DETERMINE THE LOCATION OF ALL UTILITIES AND AVOID DAMAGE THERETO.

OTHER NOTES

1- ALL STATIONS AND LONGITUDINAL DIMENSIONS ARE MEASURED ALONG THE BASELINES.

2- ALL DIMENSIONS ARE HORIZONTAL OR VERTICAL UNLESS NOTED OTHERWISE. ALL SECTIONS ARE CUT HORIZONTALLY OR VERTICALLY UNLESS NOTED OTHERWISE.

3- ALL VIEWS ARE LOOKING UPSTATION UNLESS NOTED OTHERWISE.

4- ALL ELEVATIONS ARE REFERRED TO MEAN SEA LEVEL.

LOAD CAPACITY RATINGS

LOAD RATING FACTORS (RF)
ARE AS FOLLOWS:

1- BOX CULVERT @ STA. 336+90
- A. INVENTORY LEVEL ..... RF = 2.176
- B. OPERATING LEVEL ..... RF = 3.632

2- WAIAKOA-UKA BRIDGE
- A. INVENTORY LEVEL ..... RF = 1.0
- B. OPERATING LEVEL ..... RF = 1.55

DEAN A. DOI
LICENSED PROFESSIONAL ENGINEER
No. 5580-S
HAWAII, U.S.A.
Exp: April 30, 2006

SATO & ASSOCIATES, INC.
THIS WORK WAS PREPARED BY ME OR UNDER MY SUPERVISION

STATE OF HAWAII
DEPARTMENT OF TRANSPORTATION
HIGHWAYS DIVISION

GENERAL NOTES

MOKULELE HIGHWAY WIDENING
Vicinity of Kealia Pond Driveway
to
Piilani Highway
Federal-Aid Project No. NH-A311 (4)
Scale: as Shown Date: July 2005

SHEET No. S-1 OF 35 SHEETS

ORIGINAL PLAN | NOTE BOOK No. ____ | SURVEY PLOTTED BY ____ DATE ____ | DRAWN BY " " | TRACED BY " " | DESIGNED BY " " | QUANTITIES BY " " | CHECKED BY " "

Date Plotted:Mon, 13 Feb 2006 - 9:08am
File Name:S:\m9901\1\Astructs-01.dwg

FED. ROAD DIST. NO.	STATE	FED. AID PROJ. NO.	FISCAL YEAR	SHEET NO.	TOTAL SHEETS
HAWAII	HAW.	NH-A311(4)	2006	133	180

SYMBOLS AND ABBREVIATIONS

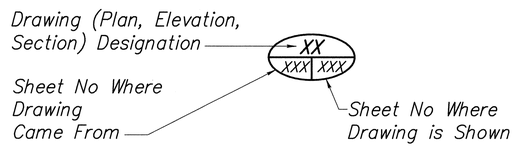

Drawing Reference

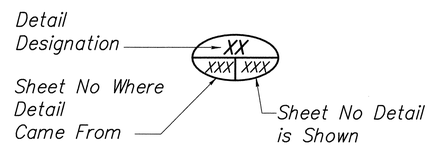

Detail Reference

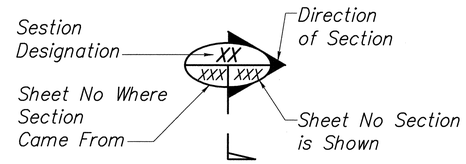

Section Reference

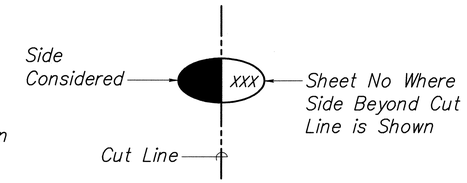

Match Line Reference

&	And
∠	Angle
@	At
℄	Base Line
℄	Center Line
[	Channel
ø	Diameter
%	Percent
ℙ	Property Line
⊥	Perpendiculaire
//	Parallele
#	Number, Pound
Abut	Abutment
AC	Asphaltic Concrete
Adj	Adjacent
Alt	Alternate
Approx	Approximate
Az	Azimuth
Bal	Balance
Bet, Btwn	Between
Blk	Block
Blkg	Blocking
BF	Both Faces
BFE	Bottom Footing Elevation
BoF	Bottom of Footing
Bk	Back
Blt	Bolt
Bm	Beam
(B), Bot	Bottom
Br	Bridge
Brg, Brgs	Bearing, Bearings
BVC	Beginning of Vertical Curve
BOCW	Bottom Cut-off Wall
BW	Bottom of Wall
Cant	Cantilever
Cond	Condition
Cont	Continue
CF	Cubic Feet
CiP	Cast in Place
CIP	Cast Iron Pipe
Cl, Clr	Clear
Col	Column
Conc	Concrete
Cond	Condition
Conn	Connection
Const	Construction
Cont	Continuous
CRM	Cement Rubble Masonry
CY, Cu Yd	Cubic Yard
CJ	Contraction Joint
C/J	Construction Joint
Dbl	Double
Det, Dtl	Detail
Dia	Diameter
Dim	Dimension
Dist	Distance
Dn	Down
Dwg, Dwgs	Drawing, Drawings
E	East
(E), Exist	Existing
Ea	Each
EF	Each Face
EJ	Expansion Joint
Elec	Electrical
El, Elev	Elevation
Emb	Embankment
EP	Edge of Pavement
Eq	Equal
Est	Estimated
EW	Each Way
Exc	Excavation
Exp	Expansion
Ext	Exterior
(F)	Fixed
F'c	Specified Strength of Concrete
F'ci	Strength of Concrete at Time of Initial Prestress
FF	Front Face
Fig	Figure
Fin	Finish
Fin Gr	Finish Grade
Ftg	Footing
Frmg	Framing
Ga	Gage, Gauge
Galv	Galvanized
Gir, G	Girder
GRP, Grp	Grouted Rubbled Paving
Gr	Grade
Grd	Groud
(H)	Hinge
Horiz	Horizontal
HS	High Strenght
Ht	Height
Hwy	Highway
IB	Inbound
IF	Inside Face
In	Inch
Int	Interior
Inv	Invert
Jt	Joint
ksi	Kips Per Square Inch
ksf	Kips Per Square Feet
kcf	Kips Per Cubic Feet
klf	Kips Per Linear Foot
L	Length
LBS, lb, lbs	Pound, Pounds
Lg	Long
Longit	Longitudinal
LS	Lump Sum
Lt	Left
Ltg	Lighting Standard
Mfr	Manufacturer
Mh	Man Hole
Mas	Masonry
Mat	Material
Max.	Maximum
Mech	Mechanical
Met, Mtl	Metal
Min.	Minimum
Misc	Miscellaneous
N	North
NIC	Not in Contract
NB	North Bound
NF	Near Face
No.	Number
NTS	Not to Scale
OB	Outbound
o.c., O.C.	On Center
OD	Outside Diameter
OG	Outside Girder
Opng	Opening
Opp	Opposite
o/s, O/S	Offset
Pr	Pair
Pvm't	Pavement
Perf	Perforated
PC	Point of Curvature
PCC	Portland Cement Concrete
psf	Pound per Square Foot
psi	Pound per Square Inch
PG-( )	Prestressed Girder-(Type)
PL	Plate
P/S	Prestressed Strands
PB	Pull Box
R	Radius
RF	Rear Face
Ref	Reference
Rev	Revised
Reinf	Reinforcement
Req'd	Required
Rt	Right
R/W	Right of Way
Rdwy	Roadway
S	South
SB	South Bound
Sc	Scale
Sched	Schedule
Sect	Section
SF	Square Foot
Shldr	Shoulder
Sht	Sheet
Sim	Similar
Spc	Space
Spcg	Spacing
Spcd	Spaced
Spcg	Spacing
Spec	Specification
Sprd	Spread
Sprd	Spread
Sq	Square
Sta	Station
Std	Standard
Stl	Steel
Stirr	Stirrup
Str	Straigth
Struct	Structural
Sym	Symbol
Symm	Symmetrical
Sys	System
(T)	Top
T&B	Top and Bottom
Temp	Temperature
Thk	Thick, Thickness
Thru	Through
ToD	Top of Deck
ToF	Top of Footing
Tot	Total
ToW, TW	Top of Wall
Transv	Transverse
Typ.	Typical
U.O.N.	Unless Otherwise Noted
Var	Varies
Ver	Verify
VC	Vertical Curve
Vert	Vertical
Vol	Volume
W	West
w/ or W/	With
Wt	Weight
WWF	Welded Wire Fabric
WW	Wingwall
w/o or W/O	Without
Wd	Wood

Date Plotted:Mon, 13 Feb 2006 - 9:09am
File Name:S:\m99011\Astruct\s42.dwg

ORIGINAL PLAN	SURVEY PLOTTED BY	DATE
	DRAWN BY	
NOTE BOOK	TRACED BY	
	DESIGNED BY	
No.	QUANTITIES BY	
	CHECKED BY	

DEAN A. DOI
LICENSED PROFESSIONAL ENGINEER
No. 5580-S
HAWAII, U.S.A.
Exp: April 30, 2006

SATO & ASSOCIATES, INC.

THIS WORK WAS PREPARED BY ME OR UNDER MY SUPERVISION

STATE OF HAWAII
DEPARTMENT OF TRANSPORTATION
HIGHWAYS DIVISION

ABBREVIATION LIST

MOKULELE HIGHWAY WIDENING
Vicinity of Kealia Pond Driveway
to
Piilani Highway
Federal-Aid Project No. NH-A311 (4)
Scale: as Shown Date: July 2005

SHEET No. S-2 OF 35 SHEETS

FED. ROAD DIST. NO.	STATE	FED. AID PROJ. NO.	FISCAL YEAR	SHEET NO.	TOTAL SHEETS
HAWAII	HAW.	NH-A311(4)	2006	134	180

INDEX OF STRUCTURAL DRAWINGS

35 Sheets Total

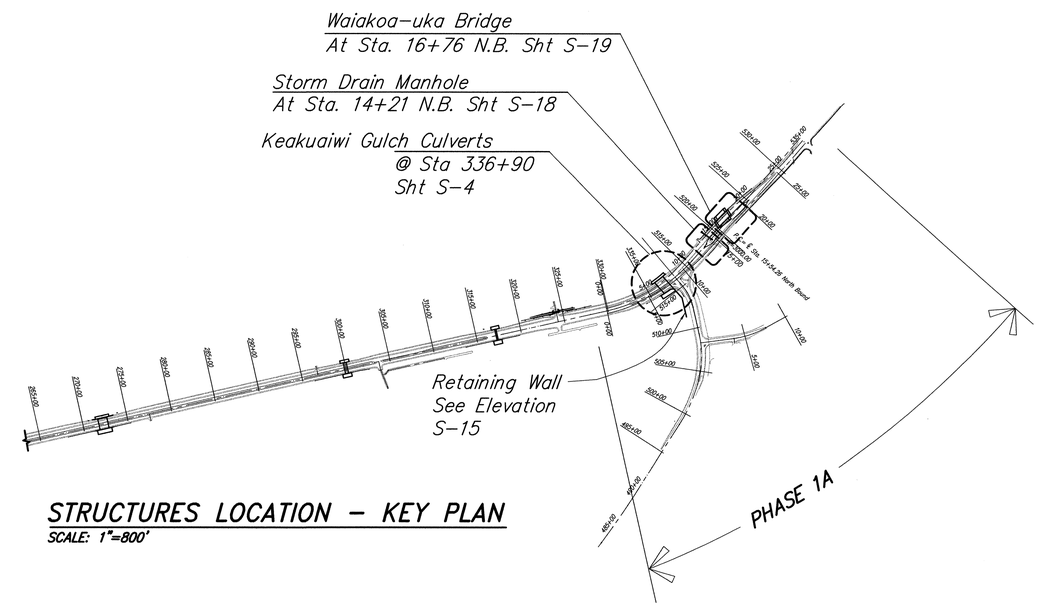

STRUCTURES LOCATION - KEY PLAN

SCALE: 1"=800'

Date Plotted:Mon, 13 Feb 2006 - 9:10am
File Name:S:\ms9001\1A\astructs-03.dwg

ORIGINAL PLAN	SURVEY PLOTTED BY	DATE
	DRAWN BY	"
	TRACED BY	"
NOTE BOOK	DESIGNED BY	"
	QUANTITIES BY	"
No.	CHECKED BY	"

DEAN A. DOI
LICENSED PROFESSIONAL ENGINEER
No. 5580-S
HAWAII, U.S.A.
Exp: April 30, 2006

SATO & ASSOCIATES, INC.

THIS WORK WAS PREPARED BY ME OR UNDER MY SUPERVISION

STATE OF HAWAII
DEPARTMENT OF TRANSPORTATION
HIGHWAYS DIVISION

LOCATION-KEYPLAN
& INDEX OF STRUCTURAL DRAWINGS

MOKULELE HIGHWAY WIDENING
Vicinity of Kealia Pond Driveway
to
Piilani Highway
Federal-Aid Project No. NH-A311 (4)
Scale: as Shown Date: July 2005

SHEET No. S-3 OF 35 SHEETS

FED. ROAD DIST. NO.	STATE	FED. AID PROJ. NO.	FISCAL YEAR	SHEET NO.	TOTAL SHEETS
HAWAII	HAW.	NH-A311(4)	2006	135	180

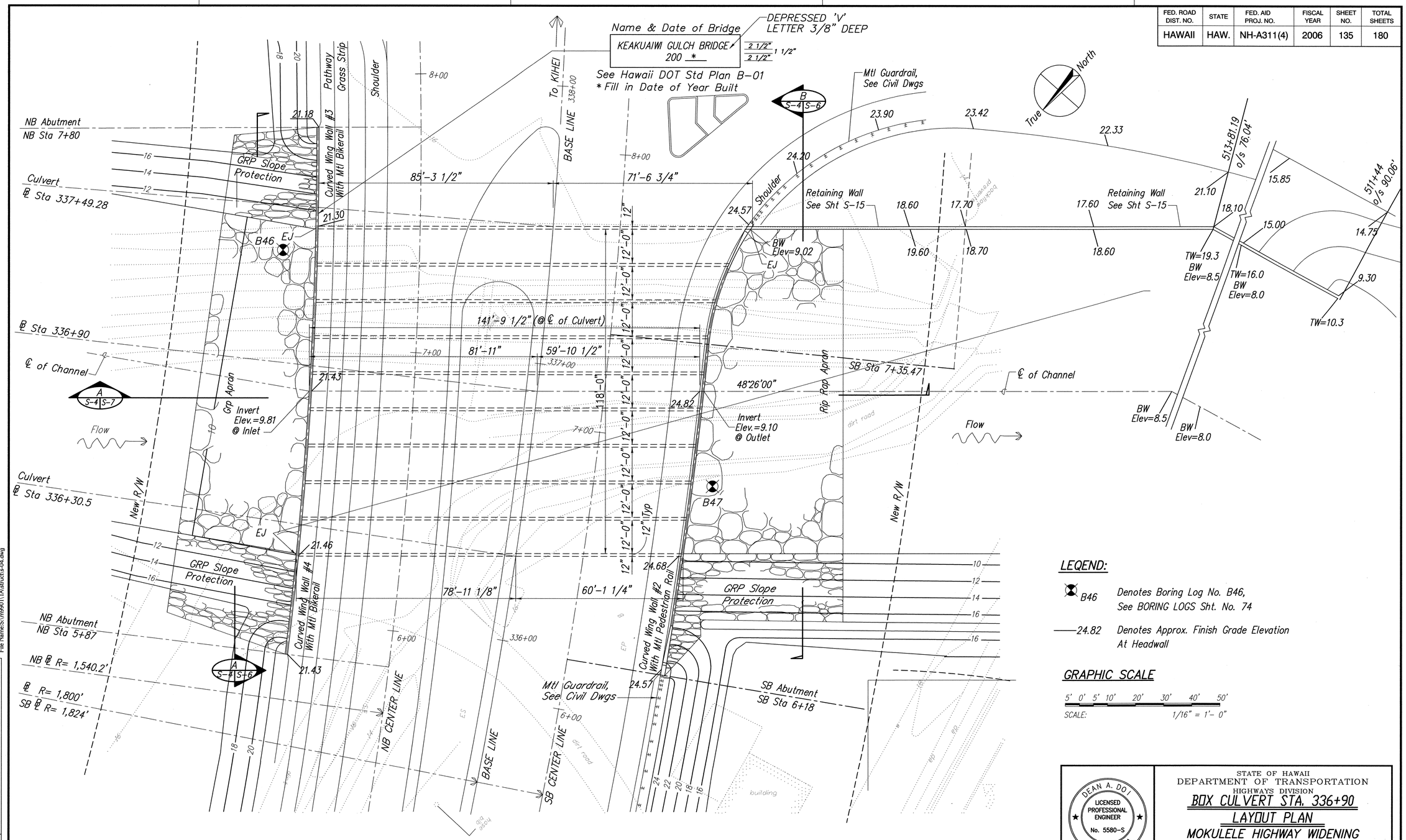

PLAN LAYOUT-BOX CULVERT AT STA 336+90

SCALE: 1/16"= 1'-0"

LEGEND:

B46 — Denotes Boring Log No. B46, See BORING LOGS Sht. No. 74

24.82 — Denotes Approx. Finish Grade Elevation At Headwall

GRAPHIC SCALE

5' 0' 5' 10' 20' 30' 40' 50'

SCALE: 1/16" = 1'- 0"

Date Plotted:Mon, 13 Feb 2006 - 9:11am
File Name:S:\mp9011\Astruct\s-04.dwg

ORIGINAL PLAN	SURVEY PLOTTED BY	DATE
	DRAWN BY	
	TRACED BY	
NOTE BOOK	DESIGNED BY	
	QUANTITIES BY	
No.	CHECKED BY	

DEAN A. DOI
LICENSED PROFESSIONAL ENGINEER
No. 5580-S
HAWAII, U.S.A.
Exp: April 30, 2006

SATO & ASSOCIATES, INC.

THIS WORK WAS PREPARED BY ME OR UNDER MY SUPERVISION

STATE OF HAWAII
DEPARTMENT OF TRANSPORTATION
HIGHWAYS DIVISION

BOX CULVERT STA. 336+90

LAYOUT PLAN

MOKULELE HIGHWAY WIDENING
Vicinity of Kealia Pond Driveway
to
Piilani Highway
Federal-Aid Project No. NH-A311 (4)
Scale: as Shown Date: July 2005

SHEET No. S-4 OF 35 SHEETS

FED. ROAD DIST. NO.	STATE	FED. AID PROJ. NO.	FISCAL YEAR	SHEET NO.	TOTAL SHEETS
HAWAII	HAW.	NH-A311(4)	2006	136	180

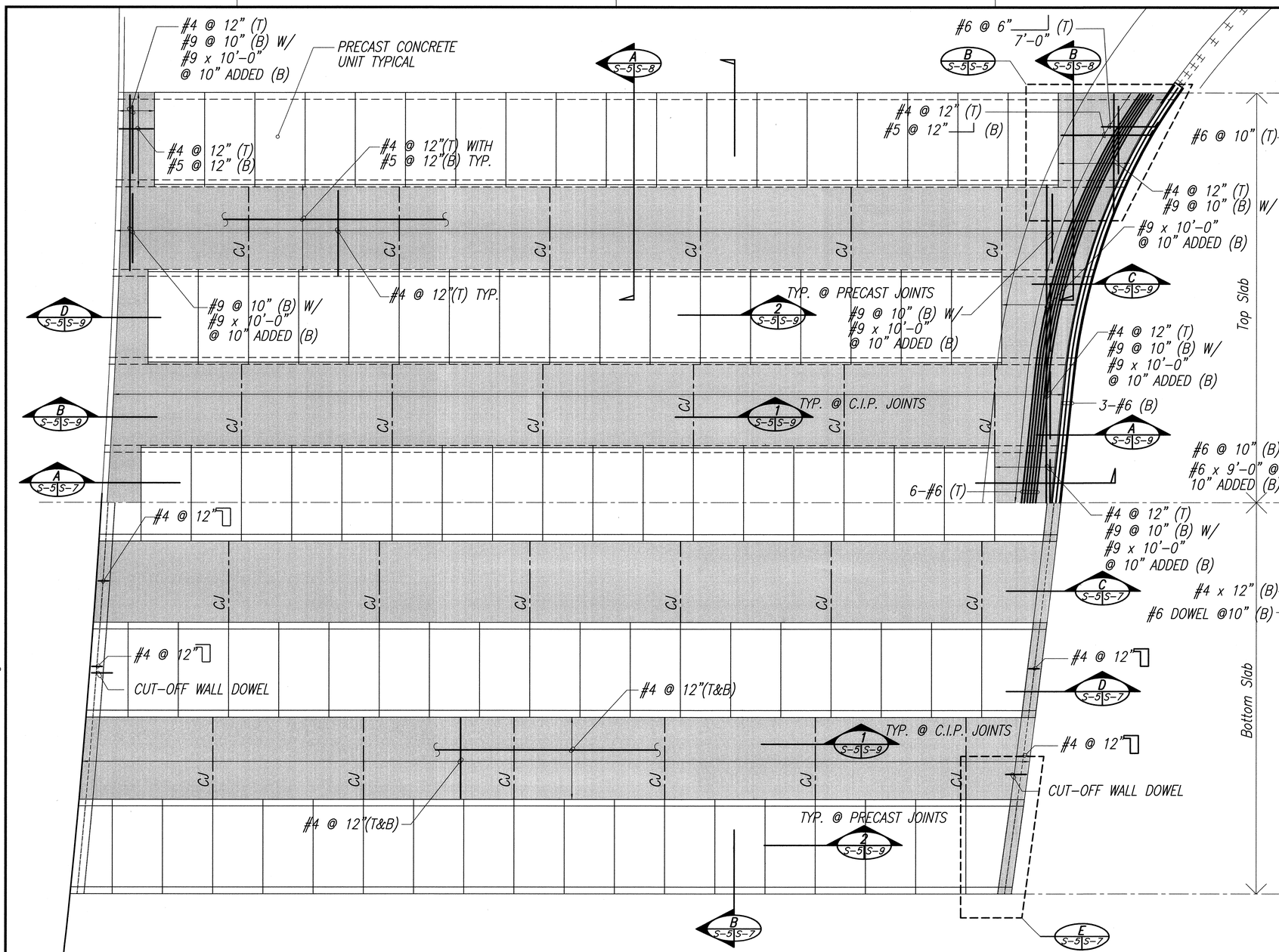

PLAN REINFORCEMENT-BOX CULVERT AT STA 336+90

SCALE: 1/8"= 1'-0"

A S-5 S-5

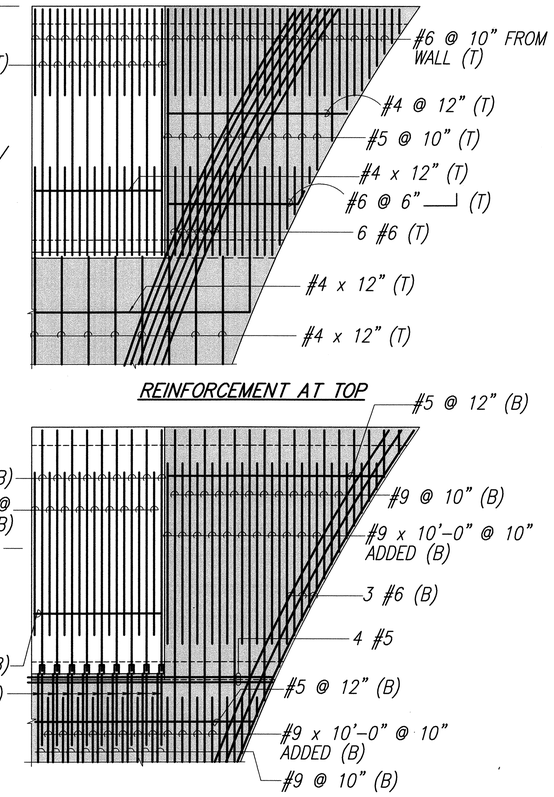

TOP SLAB REINFORCEMENT

SCALE: 1/4"= 1'-0"

B S-5 S-5

LEGEND

CJ — CONSTRUCTION JOINT (SEE DETAIL 1/S-9)

GRAPHIC SCALE:

4' 2' 0' 2' 4' 8' 12' 16'

SCALE: 1/8" = 1'- 0"

ORIGINAL PLAN	SURVEY PLOTTED BY	DATE
	DRAWN BY	" "
	TRACED BY	" "
NOTE BOOK	DESIGNED BY	" "
	QUANTITIES BY	" "
No.	CHECKED BY	" "

Date Plotted:Mon, 13 Feb 2006 - 9:13am
File Name:S:\ms9301\Asbuilt\a-05.dwg

DEAN A. DOI
LICENSED PROFESSIONAL ENGINEER
No. 5580-S
HAWAII, U.S.A.
Exp: April 30, 2006

SATO & ASSOCIATES, INC.

THIS WORK WAS PREPARED BY ME OR UNDER MY SUPERVISION

STATE OF HAWAII
DEPARTMENT OF TRANSPORTATION
HIGHWAYS DIVISION

BOX CULVERT STA. 336+90
REINFORCING PLAN
MOKULELE HIGHWAY WIDENING
Vicinity of Kealia Pond Driveway
to
Piilani Highway
Federal-Aid Project No. NH-A311 (4)
Scale: as Shown Date: July 2005

SHEET No. S - 5 OF 35 SHEETS

FED. ROAD DIST. NO.	STATE	FED. AID PROJ. NO.	FISCAL YEAR	SHEET NO.	TOTAL SHEETS
HAWAII	HAW.	NH-A311(4)	2006	137	180

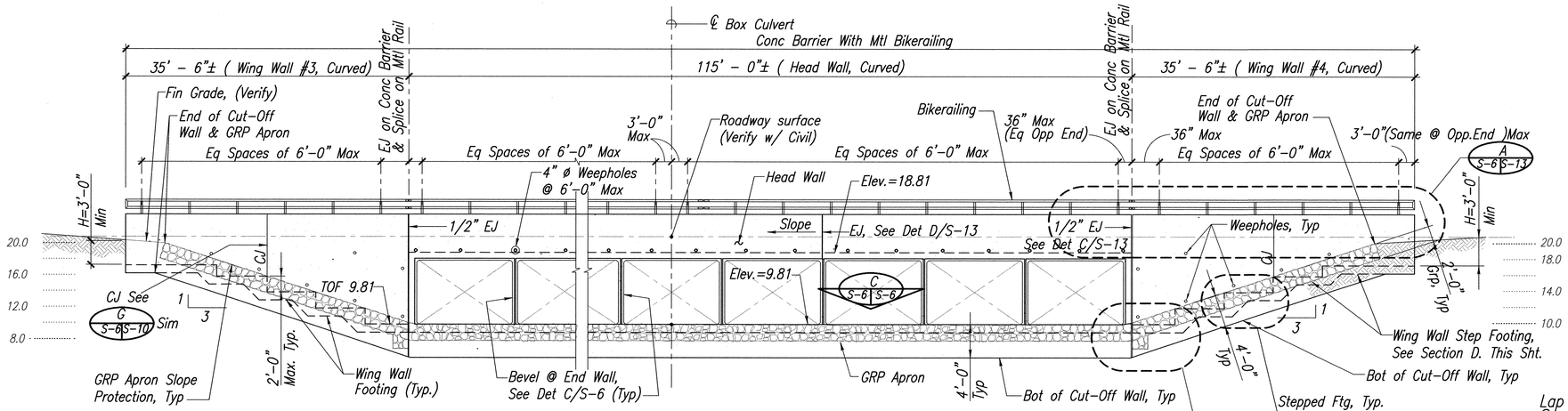

INLET ELEVATION – BOX CULVERT AT STA 336+90 (A S-4 S-6)

SCALE: 1/8"= 1'-0"

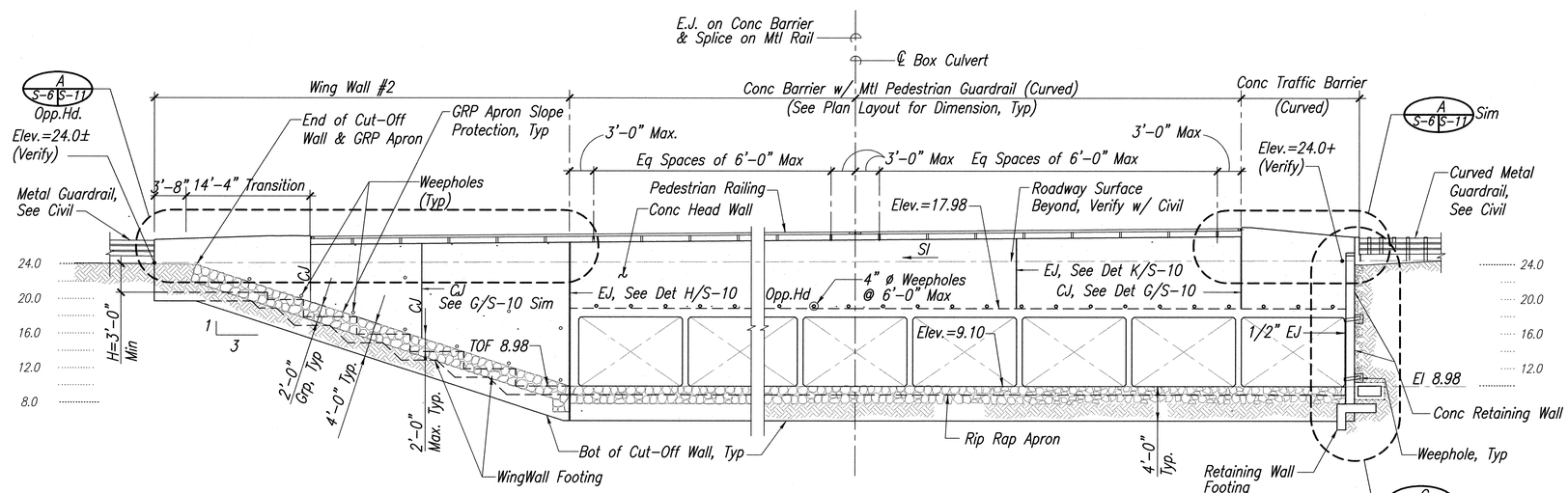

OUTLET ELEVATION – BOX CULVERT AT STA 336+90 (B S-4 S-6)

SCALE: 1/8"= 1'-0"

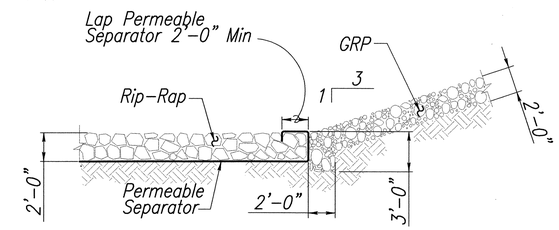

RIPRAP GRADATION	
STONE SIZE (LBS)	PERCENT OF STONE SMALLER THAN
200	100
75	50
5	10

NOTE:

Neither Width Nor Thickness of a Single Stone Shall be Less Than one-Third its Length.

SECTION (D S-6 S-6)

SCALE: 3/16"= 1'-0"

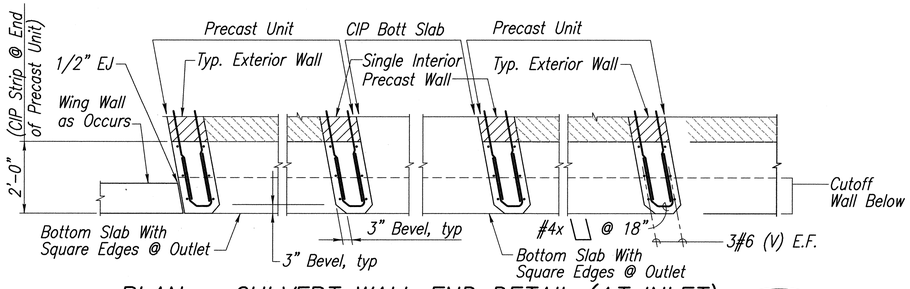

PLAN – CULVERT WALL END DETAIL (AT INLET) (C S-6 S-6)

SCALE: 1/2"= 1'-0"

LEGEND:

EJ: Expansion Joint

CJ: Contraction Joint or Construction Joint See Detail

TOF 9.81: Top of Wingwall Footing Elevation

GRAPHIC SCALE

4' 2' 0' 2' 4' 8' 12' 16'
SCALE: 1/8" = 1'-0"

4' 2' 0' 2' 6' 10' 14'
SCALE: 3/16" = 1'-0"

2' 1' 0' 1' 2' 4' 6' 10'
SCALE: 1/2" = 1'-0"

DEAN A. DOI LICENSED PROFESSIONAL ENGINEER No. 5580-S HAWAII, U.S.A.
Exp: April 30, 2006
SATO & ASSOCIATES, INC.
THIS WORK WAS PREPARED BY ME OR UNDER MY SUPERVISION

STATE OF HAWAII
DEPARTMENT OF TRANSPORTATION
HIGHWAYS DIVISION

BOX CULVERT STA. 336+90
INLET & OUTLET ELEVATION & DETAILS
MOKULELE HIGHWAY WIDENING
Vicinity of Kealia Pond Driveway to Piilani Highway
Federal-Aid Project No. NH-A311 (4)
Scale: as Shown Date: July 2005

SHEET No. S-6 OF 35 SHEETS

Date Plotted:Mon, 13 Feb 2006 - 9:17am
File Name:S:\mf9011\Astructs-06.dwg

ORIGINAL PLAN	SURVEY PLOTTED BY	DATE
	DRAWN BY	"
	TRACED BY	"
NOTE BOOK	DESIGNED BY	"
	QUANTITIES BY	"
No.	CHECKED BY	"

FED. ROAD DIST. NO.	STATE	FED. AID PROJ. NO.	FISCAL YEAR	SHEET NO.	TOTAL SHEETS
HAWAII	HAW.	NH-A311(4)	2006	138	180

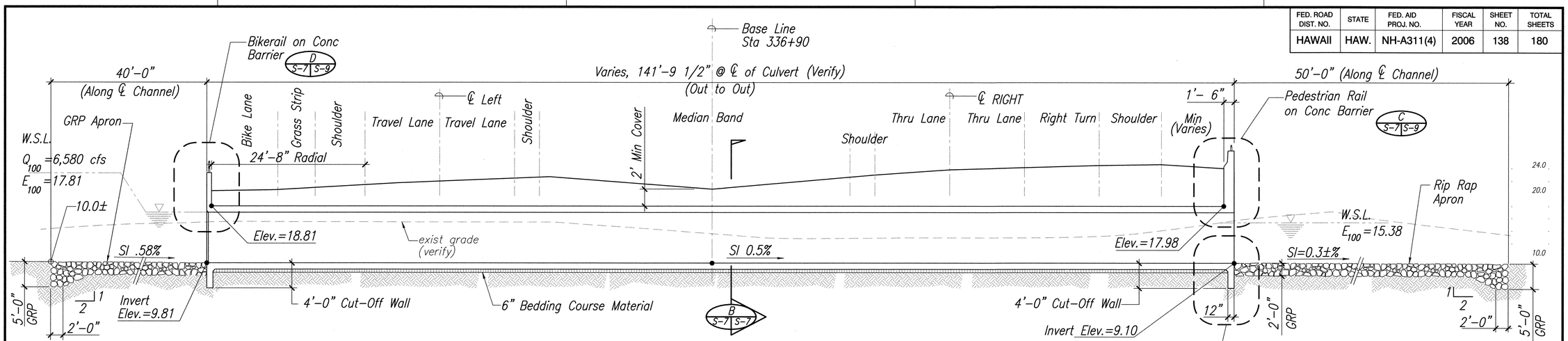

LONGITUDINAL SECTION – BOX CULVERT AT STA 336+90 (A S-4 S-7)

SCALE: 1/8"= 1'-0"

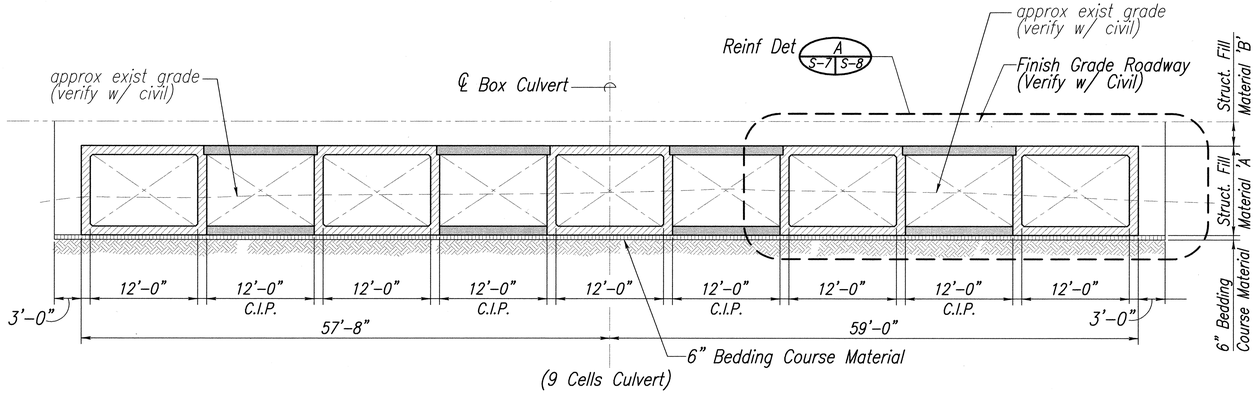

CROSS SECTION – BOX CULVERT AT STA 336+90 (B S-7 S-7)

SCALE: 1/8"= 1'-0"

S-5

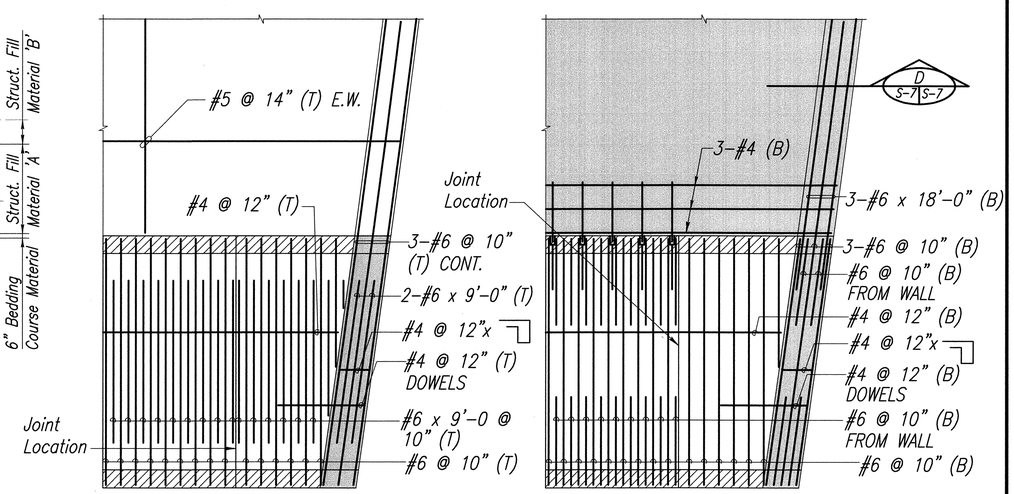

REINFORCEMENT AT TOP

REINFORCEMENT AT BOTTOM

BOTTOM SLAB REINFORCEMENT (E S-5 S-7)

SCALE: 1/4"= 1'-0"

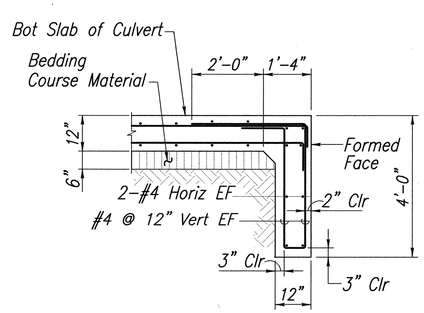

CUT-OFF WALL AT CIP BOX CULVERT (C S-7 S-7)

SCALE: 1/2"= 1'-0"

S-5

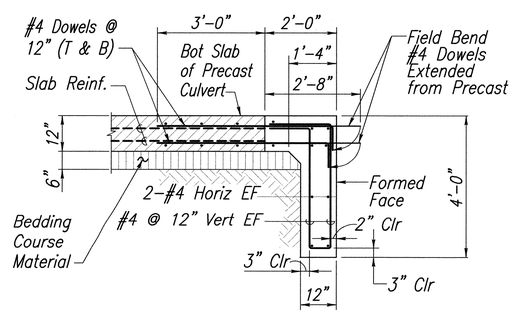

CUT-OFF WALL AT PRECAST BOX CULVERT (D S-5 S-7)

SCALE: 1/2"= 1'-0"

S-4 S-7

LEGEND:

Precast Concrete Unit

Poured in Place Concrete

Construction Joint CJ

GRAPHIC SCALE

2' 1' 0' 1' 2' 4' 6' 10'

SCALE: 1/2" = 1'-0"

4' 2' 0' 2' 4' 8' 12' 16'

SCALE: 1/8" = 1'-0"

DEAN A. DOI LICENSED PROFESSIONAL ENGINEER No. 5580-S HAWAII, U.S.A.

Exp: April 30, 2006

SATO & ASSOCIATES, INC.

THIS WORK WAS PREPARED BY ME OR UNDER MY SUPERVISION

STATE OF HAWAII
DEPARTMENT OF TRANSPORTATION
HIGHWAYS DIVISION

BOX CULVERT AT STA. 336+90
LONGITUDINAL/CROSS SECTION & DETAILS

MOKULELE HIGHWAY WIDENING
Vicinity of Kealia Pond Driveway
to
Piilani Highway
Federal-Aid Project No. NH-A311 (4)
Scale: as Shown Date: July 2005

SHEET No. S - 7 OF 35 SHEETS

ORIGINAL PLAN	SURVEY PLOTTED BY	DATE
	DRAWN BY	
NOTE BOOK	TRACED BY	
	DESIGNED BY	
No.	QUANTITIES BY	
	CHECKED BY	

Date Plotted:Mon, 13 Feb 2006 - 9:18am
File Name:S:\m9501\1A\struct\s-07.dwg

FED. ROAD DIST. NO.	STATE	FED. AID PROJ. NO.	FISCAL YEAR	SHEET NO.	TOTAL SHEETS
HAWAII	HAW.	NH-A311(4)	2006	139	180

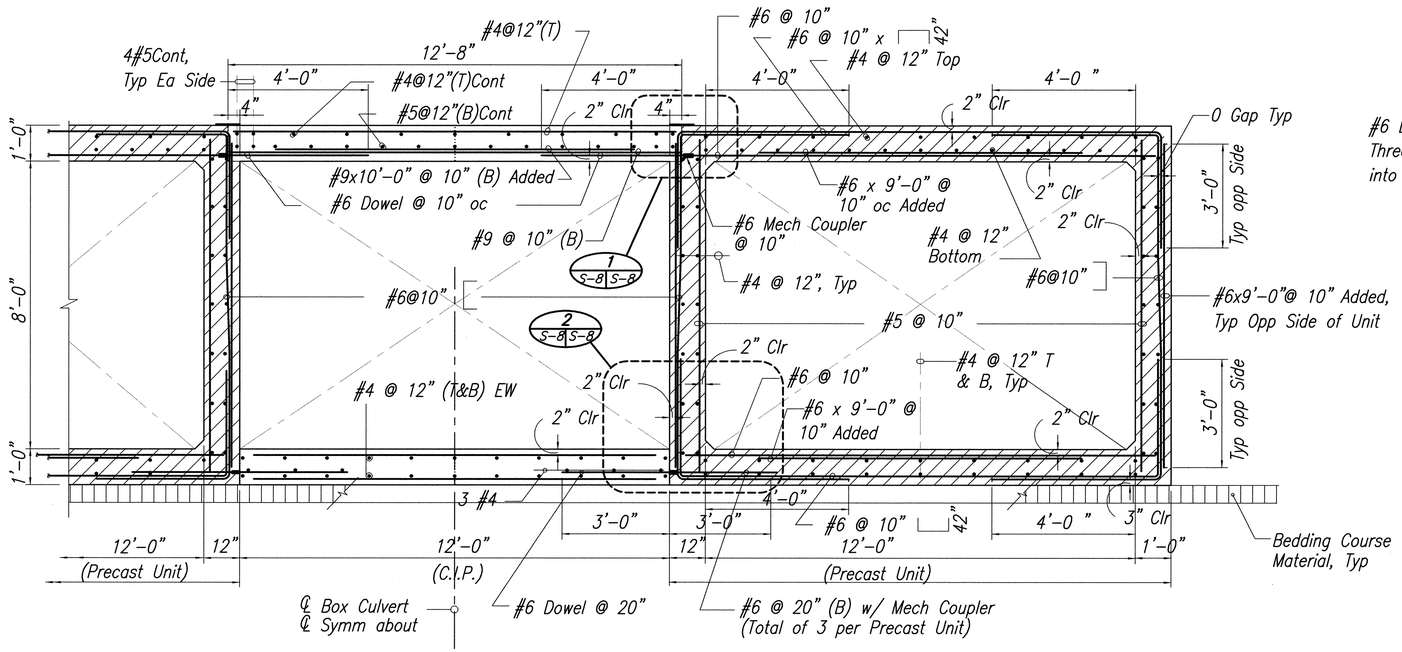

CROSS SECTION – BOX CULVERT (A, S-5 | S-8)

1/2"= 1'-0"

S-7

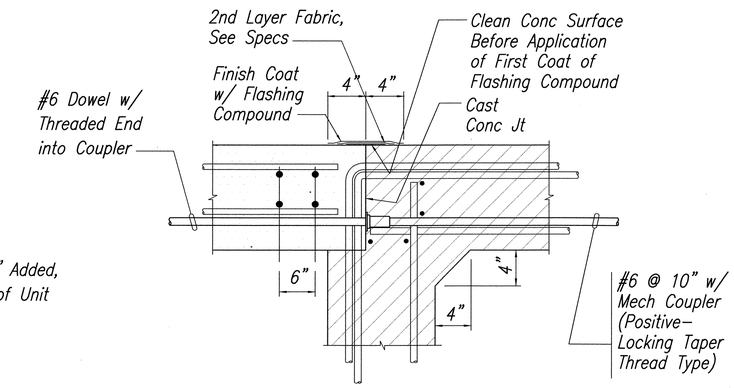

NOTE:

Flashing Compound For Construction Joint Waterproofing Shall Conform to The Requirement of ASTM Specifications D4586 As a Plying Cement In The Construction of Membrane Waterproofing Systems With Fabrics Conforming to ASTM Specification D1668 (Asphalt Types). The Product Shall Adhere to Damp Concrete And Masonry Surfaces.

TYP FLASHING COMPOUND WATERPROOFING DETAIL (1, S-8 | S-8)

N.T.S.

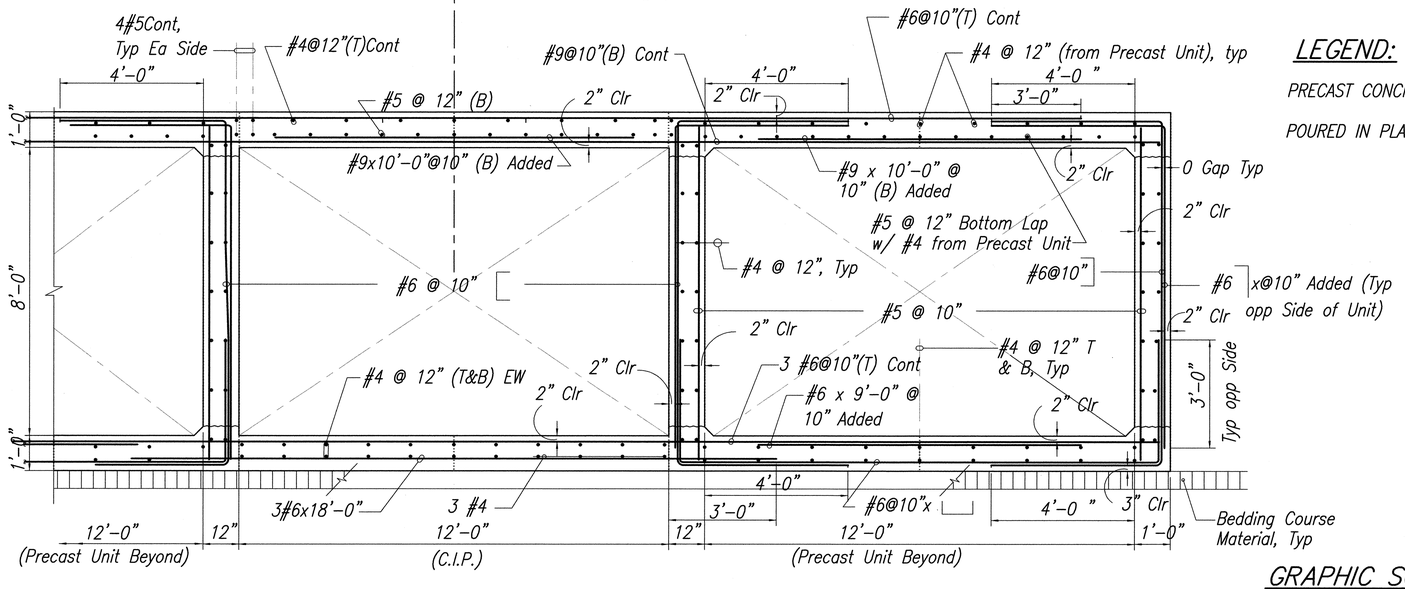

CROSS SECTION – END BOX CULVERT HEAR HEADWALL (B, S-5 | S-8)

1/2"= 1'-0"

LEGEND:

PRECAST CONCRETE

POURED IN PLACE CONCRETE

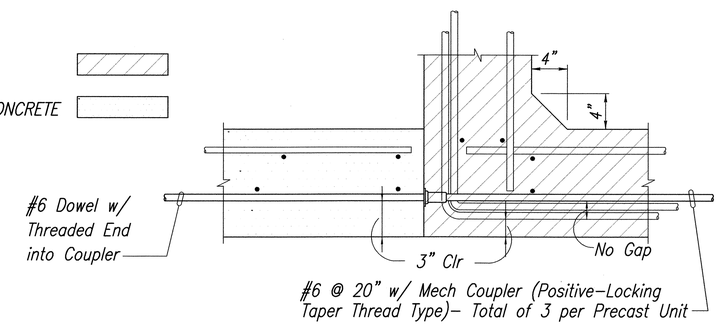

DETAIL (2, S-8 | S-8)

SCALE: 1 1/2"= 1'-0"

GRAPHIC SCALES

2' 1' 0' 1' 2' 4' 6'
SCALE: 1/2" = 1'- 0"

1' 6" 0" 6" 1' 2'
SCALE: 1 1/2" = 1'- 0"

DEAN A. DOI
LICENSED PROFESSIONAL ENGINEER
No. 5580-S
HAWAII, U.S.A.
Exp: April 30, 2006

SATO & ASSOCIATES, INC.

THIS WORK WAS PREPARED BY ME OR UNDER MY SUPERVISION

STATE OF HAWAII
DEPARTMENT OF TRANSPORTATION
HIGHWAYS DIVISION

BOX CULVERT REINFORCING DETAILS

MOKULELE HIGHWAY WIDENING
Vicinity of Kealia Pond Driveway
to
Piilani Highway
Federal–Aid Project No. NH–A311 (4)
Scale: as Shown Date: July 2005

SHEET No. S - 8 OF 35 SHEETS

ORIGINAL PLAN | NOTE BOOK No. | SURVEY PLOTTED BY | DRAWN BY | TRACED BY | DESIGNED BY | QUANTITIES BY | CHECKED BY | DATE

Date Plotted:Mon, 13 Feb 2006 - 9:23am
File Name:S:\nh9011\Astruct\s-08.dwg

FED. ROAD DIST. NO.	STATE	FED. AID PROJ. NO.	FISCAL YEAR	SHEET NO.	TOTAL SHEETS
HAWAII	HAW.	NH-A311(4)	2006	140	180

NOTE:
For Filter, Impevious Material, & Balance of Weephole Information See Sheet S-12

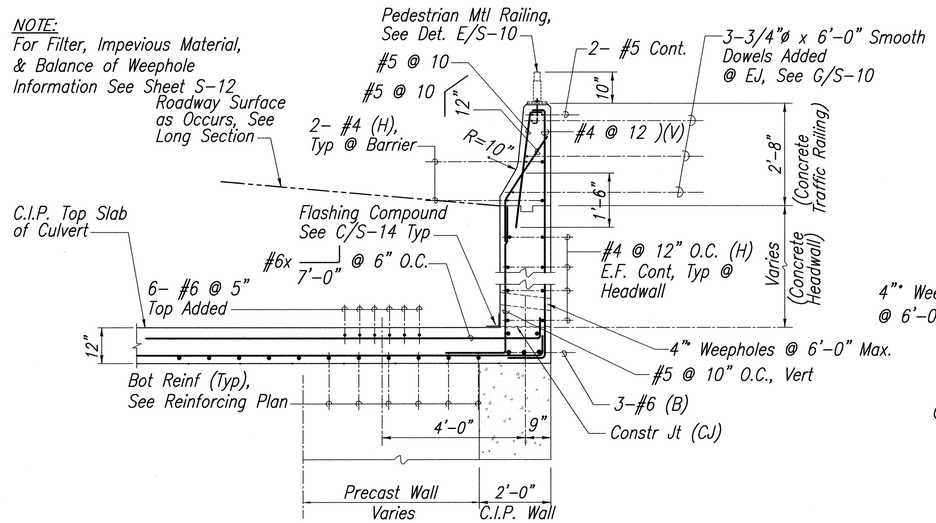

HEADWALL AT C.I.P. BOX CULVERT (A)

SCALE: 1/2"= 1'-0"

S-5 | S-9 — S-11, S-7

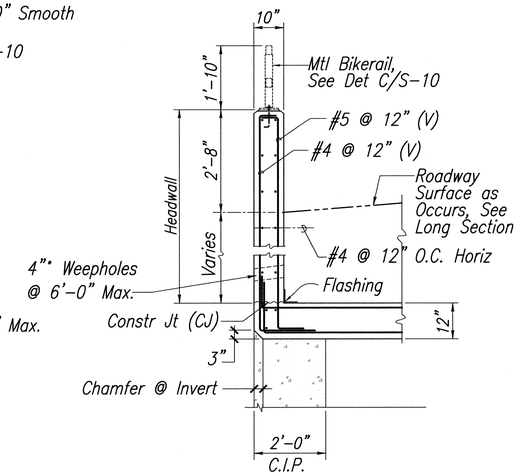

HEADWALL AT C.I.P. BOX CULVERT (B)

SCALE: 1/2"= 1'-0"

S-5 | S-9 — S-13

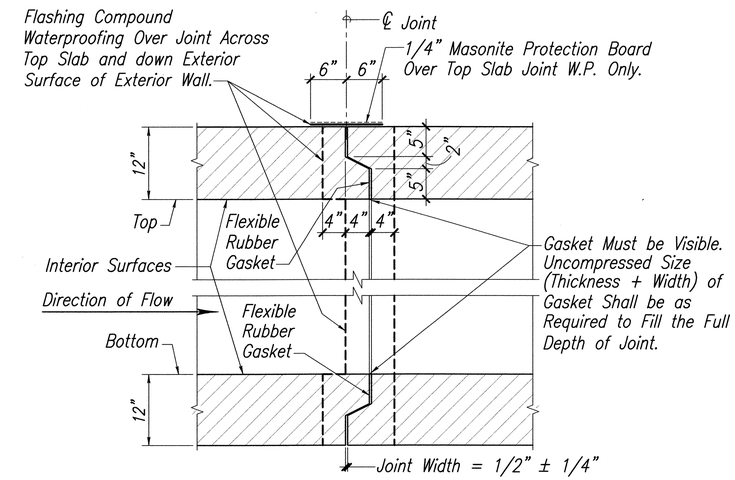

PRECAST UNIT JOINT DETAIL (2)

SCALE: 1"= 1'-0"

S-5, S-8 — S-9

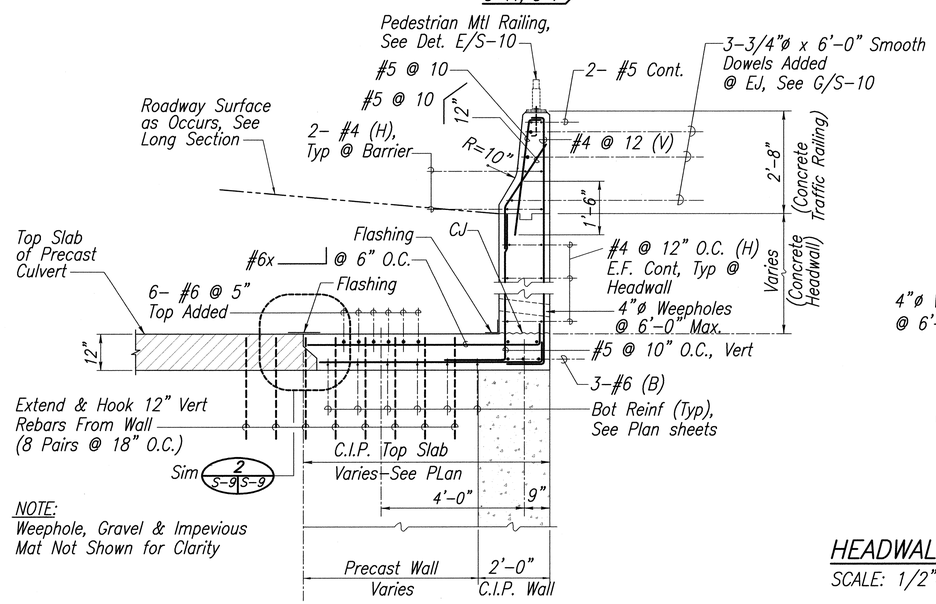

NOTE:
Weephole, Gravel & Impevious Mat Not Shown for Clarity

HEADWALL AT PRECAST BOX CULVERT (C)

SCALE: 1/2"= 1'-0" (For Typical Top Reinforcement, See Cross-Section Near Headwall)

S-5 | S-9 — S-7

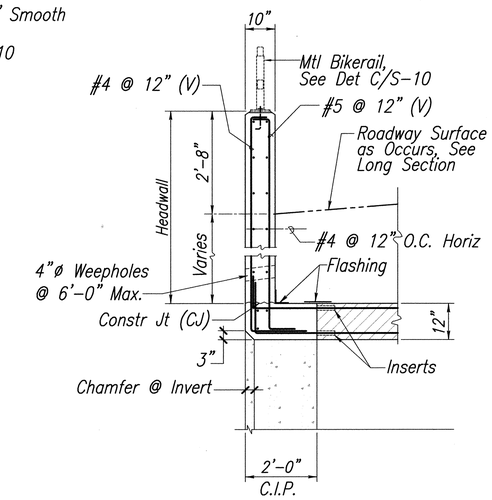

HEADWALL AT PRECAST BOX CULVERT (D)

SCALE: 1/2"= 1'-0"

S-5 | S-9 — S-7

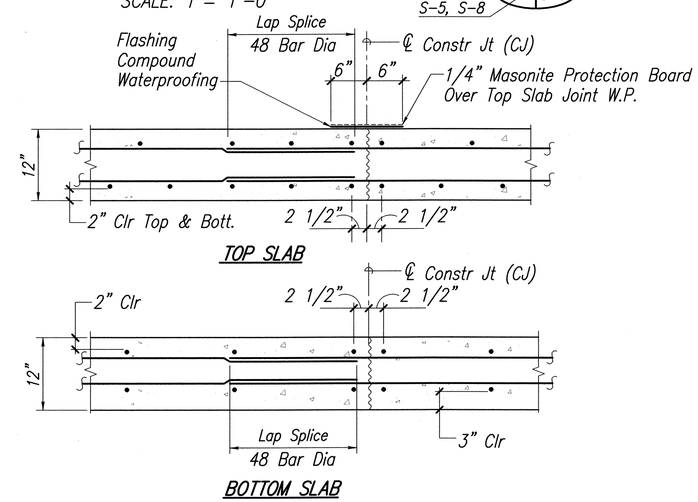

C.I.P. SLAB CONSTRUCTION JOINT DETAILS (1)

SCALE: 1"= 1'-0"

S-5 | S-9

GRAPHIC SCALES

2' 1' 0' 1' 2' 4' 6'

SCALE: 1/2" = 1'- 0"

1' 0' 1' 2' 3' 4'

SCALE: 1" = 1'- 0"

ORIGINAL PLAN	SURVEY PLOTTED BY	DATE
	DRAWN BY	"
	TRACED BY	"
NOTE BOOK	DESIGNED BY	"
	QUANTITIES BY	"
No.	CHECKED BY	"

Date Plotted:Mon, 13 Feb 2006 - 9:24am
File Name:S:\ms9\01\Astructs-09.dwg

DEAN A. DOI
LICENSED PROFESSIONAL ENGINEER
No. 5580-S
HAWAII, U.S.A.
Exp: April 30, 2006

SATO & ASSOCIATES, INC.
THIS WORK WAS PREPARED BY ME OR UNDER MY SUPERVISION

STATE OF HAWAII
DEPARTMENT OF TRANSPORTATION
HIGHWAYS DIVISION

BOX CULVERT STA. 336+90
HEADWALL DETAILS

MOKULELE HIGHWAY WIDENING
Vicinity of Kealia Pond Driveway to Piilani Highway
Federal-Aid Project No. NH-A311 (4)
Scale: as Shown Date: July 2005

SHEET No. S - 9 OF 35 SHEETS

FED. ROAD DIST. NO.	STATE	FED. AID PROJ. NO.	FISCAL YEAR	SHEET NO.	TOTAL SHEETS
HAWAII	HAW.	NH-A311(4)	2006	141	180

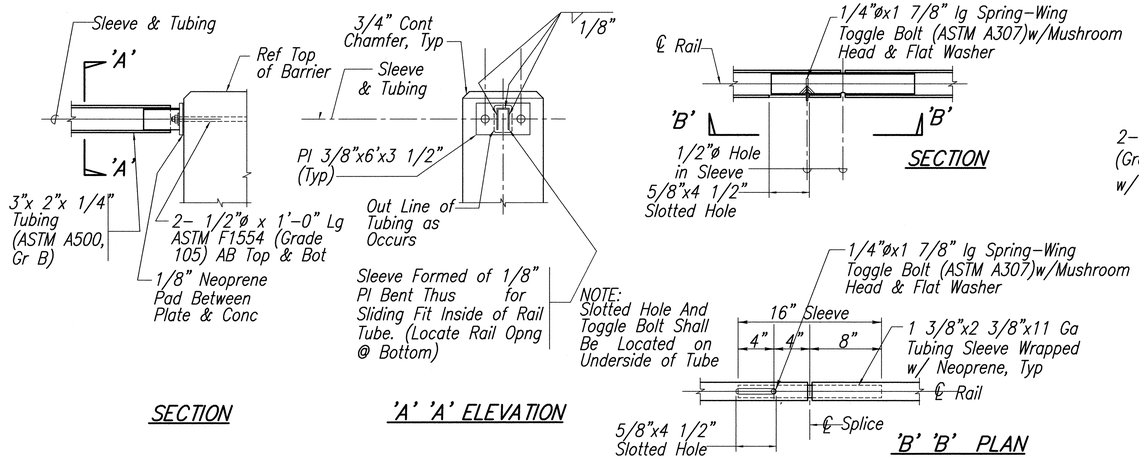

TYPICAL RAIL SLEEVE ANCHOR AT CONCRETE WING WALL CONNECTION DETAILS

SCALE: 1 1/2"= 1'–0" — A (S-11 | S-10) — S-35, S-34, S-33, S-13

TYPICAL TUBE SPLICE DETAILS

SCALE: 1 1/2"= 1'–0" — B (S-11 | S-10) — S-35, S-33, S-13

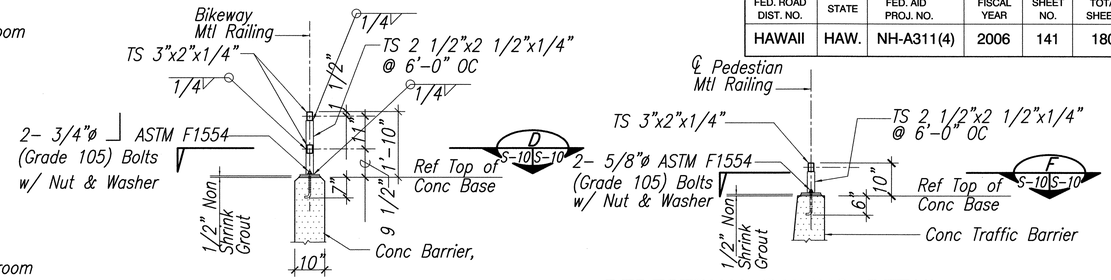

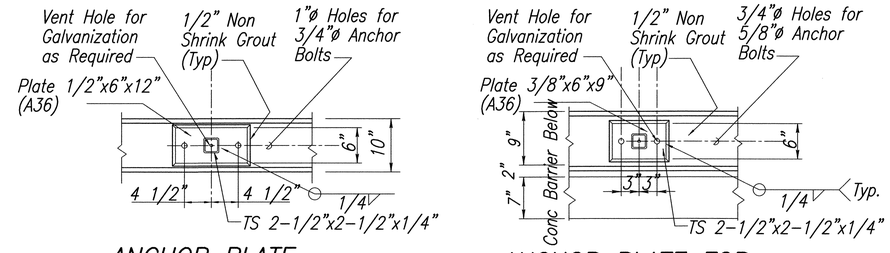

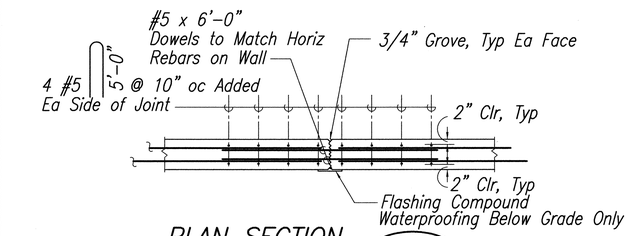

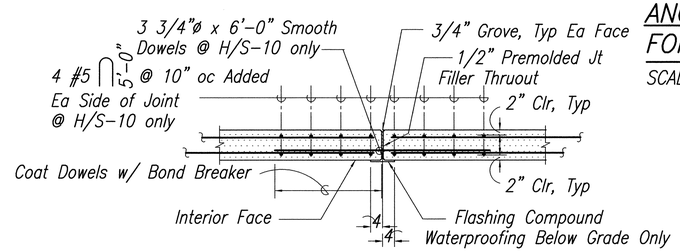

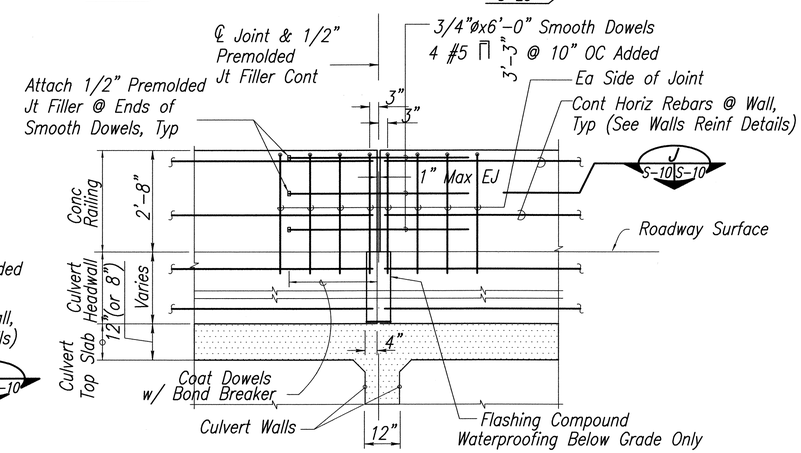

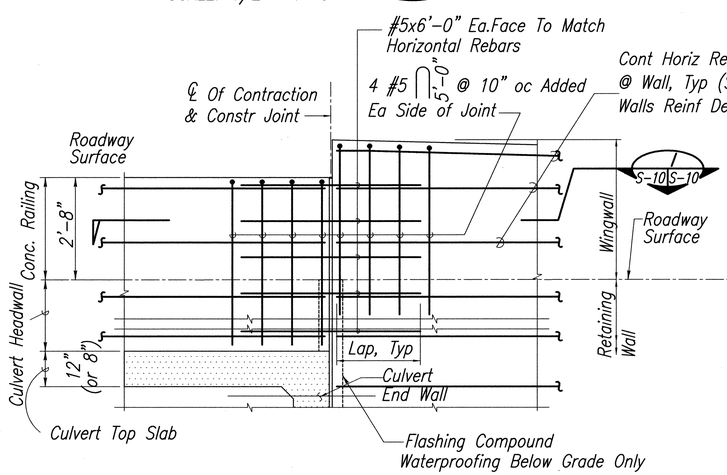

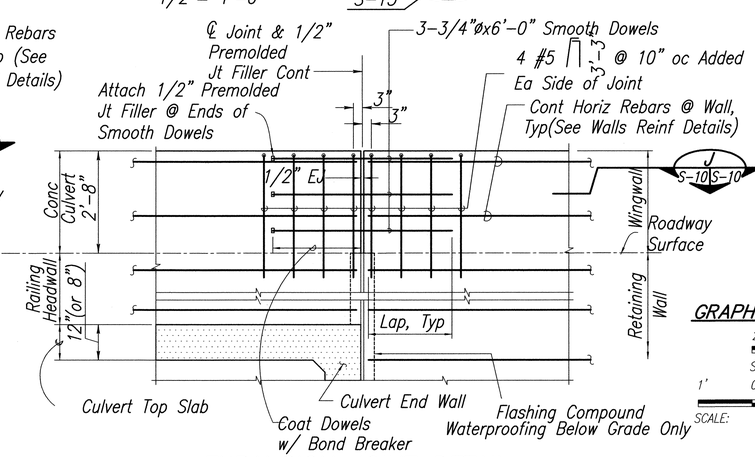

GRAPHIC SCALES

2' 1' 0' 1' 2' 4' 6'
SCALE: 1/2" = 1'– 0"

1' 0' 1' 2' 3' 4'
SCALE: 1" = 1'– 0"

DEAN A. DOI
LICENSED PROFESSIONAL ENGINEER
No. 5580–S
HAWAII, U.S.A.
Exp: April 30, 2006
SATO & ASSOCIATES, INC.
THIS WORK WAS PREPARED BY ME OR UNDER MY SUPERVISION

STATE OF HAWAII
DEPARTMENT OF TRANSPORTATION
HIGHWAYS DIVISION

BOX CULVERT STA. 336+90
HEADWALL DETAILS
MOKULELE HIGHWAY WIDENING
Vicinity of Kealia Pond Driveway to Piilani Highway
Federal–Aid Project No. NH–A311 (4)
Scale: as Shown Date: July 2005

SHEET No. S - 10 OF 35 SHEETS

ORIGINAL PLAN | SURVEY PLOTTED BY | DRAWN BY | TRACED BY | DESIGNED BY | QUANTITIES BY | CHECKED BY | DATE
NOTE BOOK No.

Date Plotted:Mon, 13 Feb 2006 - 9:30am
File Name:S:\m9901\1\Astructs-10.dwg

FED. ROAD DIST. NO.	STATE	FED. AID PROJ. NO.	FISCAL YEAR	SHEET NO.	TOTAL SHEETS
HAWAII	HAW.	NH-A311(4)	2006	142	180

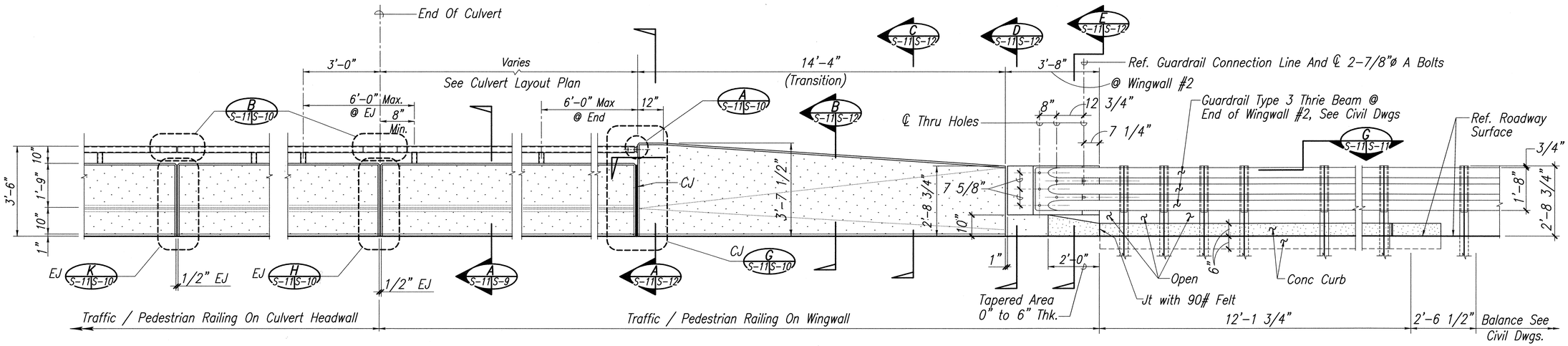

CONCRETE TRAFFIC / PEDESTRIAN RAIL ELEVATION

SCALE: 1/2"= 1'-0"

S-11 A S-6 S-11

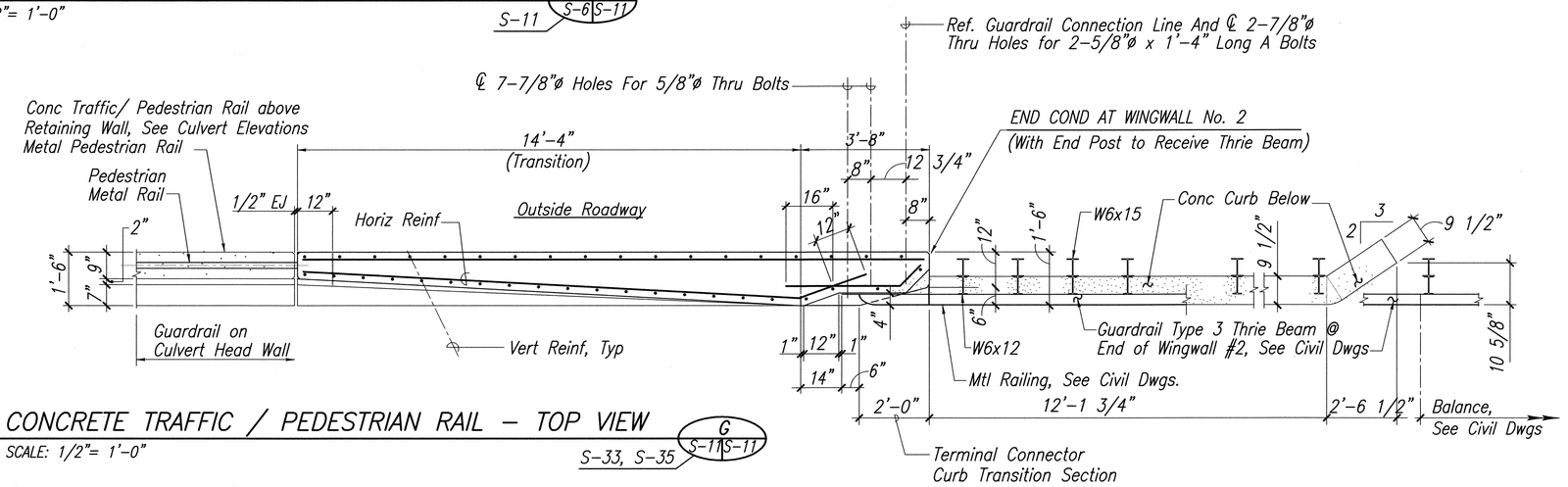

CONCRETE TRAFFIC / PEDESTRIAN RAIL – TOP VIEW

SCALE: 1/2"= 1'-0"

S-33, S-35 G S-11 S-11

NOTE:
1. Curb to be In Line w/ Front Face of Metal Guardrail & Match Front Face of End Post at Tapered End.
2. Curb Transition Section shall be cast Monolithically with the End Post.

GRAPHIC SCALES

2' 1' 0' 1' 2' 4' 8'

SCALE: 1/2" = 1'- 0"

Date Plotted:Mon, 13 Feb 2006 - 9:31am
File Name:S:\m9901\1A\struct\s-11.dwg

ORIGINAL PLAN	SURVEY PLOTTED BY	DATE
	DRAWN BY	
NOTE BOOK	TRACED BY	
	DESIGNED BY	
	QUANTITIES BY	
No.	CHECKED BY	

DEAN A. DOI
LICENSED PROFESSIONAL ENGINEER
No. 5580-S
HAWAII, U.S.A.
Exp: April 30, 2006
SATO & ASSOCIATES, INC.
THIS WORK WAS PREPARED BY ME OR UNDER MY SUPERVISION

STATE OF HAWAII
DEPARTMENT OF TRANSPORTATION
HIGHWAYS DIVISION

BOX CULVERT STA. 336+90
WING WALL 1 & 2- ELEVATIONS & DETAILS
MOKULELE HIGHWAY WIDENING
Vicinity of Kealia Pond Driveway
to
Piilani Highway
Federal-Aid Project No. NH-A311 (4)
Scale: as Shown Date: July 2005

SHEET No. S - 11 OF 35 SHEETS

FED. ROAD DIST. NO.	STATE	FED. AID PROJ. NO.	FISCAL YEAR	SHEET NO.	TOTAL SHEETS
HAWAII	HAW.	NH-A311(4)	2006	143	180

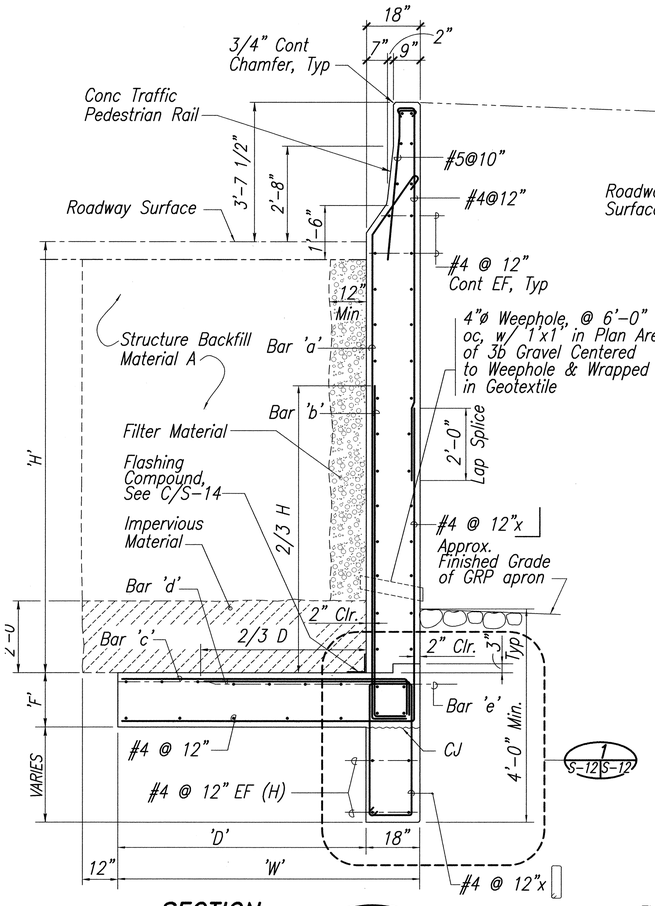

SECTION A
SCALE: 1/2"= 1'-0"
S-11 S-12

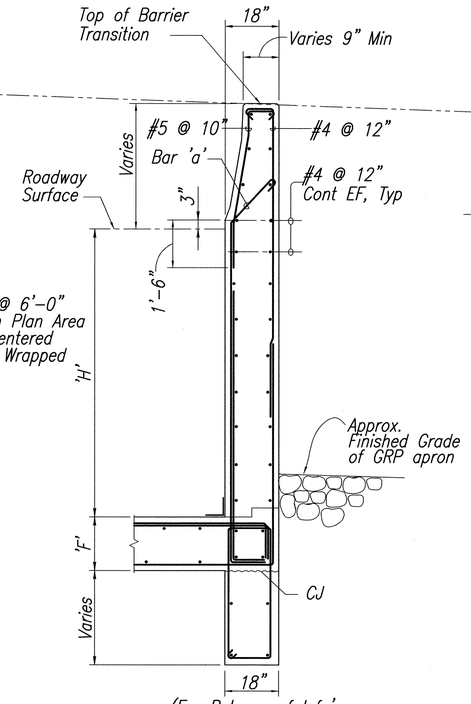

(For Balance of Info's See Sect A/S-12)

SECTION B
SCALE: 1/2"= 1'-0"
S-11 S-12

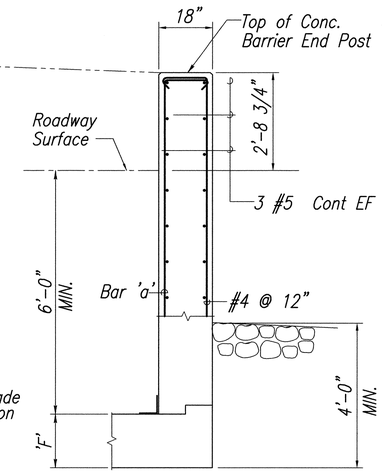

(For Balance of Info's See Sect D/S-12)

SECTION C
SCALE: 1/2"= 1'-0"
S-11 S-12

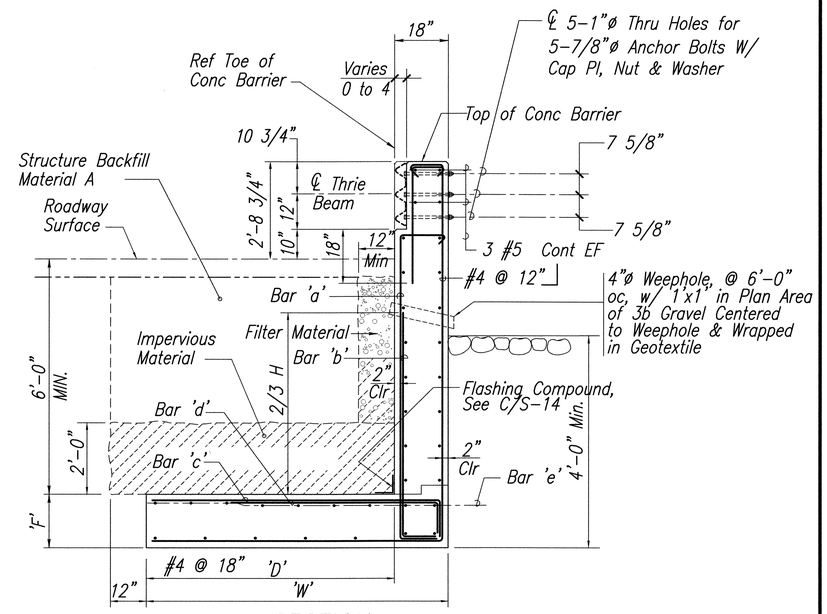

SECTION D
SCALE: 1/2"= 1'-0"
S-11 S-12

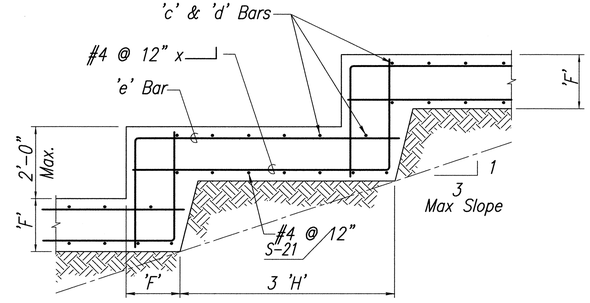

TYPICAL STEPPED WALL FOOTING
SCALE: 1/2"= 1'-0"
2
S-6 S-12
S-21

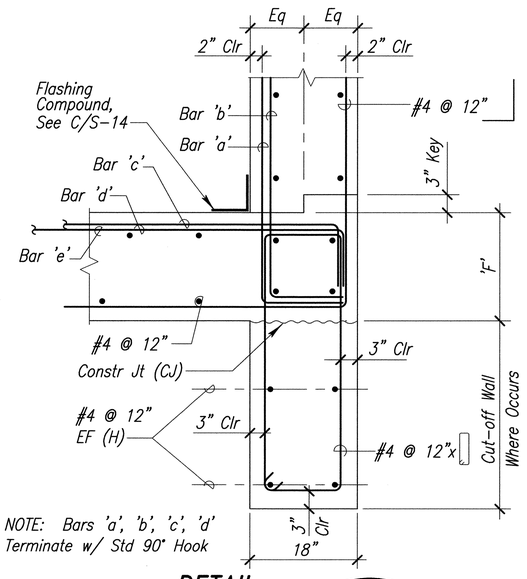

NOTE: Bars 'a', 'b', 'c', 'd' Terminate w/ Std 90° Hook

DETAIL
SCALE: 1"= 1'-0"
1
S-12 S-12
S-14

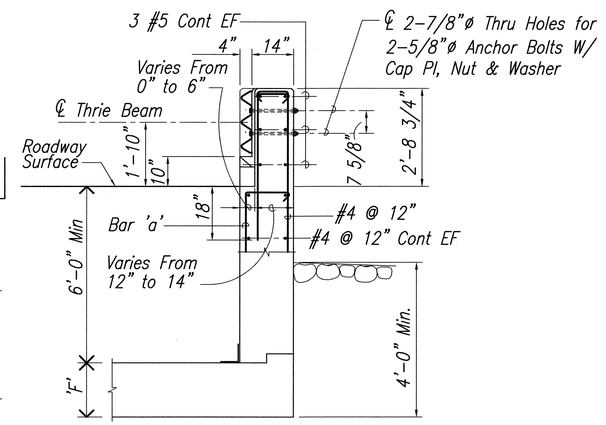

(For Balance of Info's See Sect D/S-12)

SECTION E
SCALE: 1/2"= 1'-0"
S-6 S-12
S-11

WING WALLS #1 & #2 SCHEDULE

Desgn 'H'	6'	8'	10'	12'	14'
'F'	1'- 2"	1'- 2"	1'- 4"	1'- 4"	1'- 6"
'W'	12'- 6"	12'- 6"	12'- 6"	12'- 6"	15'- 6"
'a' Bars	#5 @ 10	#5 @ 10	#5 @ 10	#6 @ 10	#6 @ 10
'b' Bars	#5 @ 20	#6 @ 20	#6 @ 10	#6 @ 10	#7 @ 10
'c' Bars	#6 @ 10	#7 @ 10	#7 @ 10	#8 @ 10	#8 @ 10
'd' Bars	#6 @ 10	#7 @ 10	#7 @ 10	#8 @ 10	#8 @ 10
'e' Bars	12 #5	12 #5	14 #5	14 #5	16 #5

GRAPHIC SCALES

2' 1' 0' 1' 2' 4' 6' 10'
SCALE: 1/2" = 1'-0"

1' 0' 1' 2' 3' 5'
SCALE: 1" = 1'-0"

DEAN A. DOI
LICENSED PROFESSIONAL ENGINEER
No. 5580-S
HAWAII, U.S.A.
Exp: April 30, 2006
SATO & ASSOCIATES, INC.
THIS WORK WAS PREPARED BY ME OR UNDER MY SUPERVISION

STATE OF HAWAII
DEPARTMENT OF TRANSPORTATION
HIGHWAYS DIVISION
BOX CULVERT STA.336+90
WING WALL 1 & 2-SECTIONS & DETAILS
MOKULELE HIGHWAY WIDENING
Vicinity of Kealia Pond Driveway to Piilani Highway
Federal-Aid Project No. NH-A311 (4)
Scale: as Shown Date: July 2005
SHEET No. S - 12 OF 35 SHEETS

ORIGINAL PLAN | NOTE BOOK No. | SURVEY PLOTTED BY | DRAWN BY | TRACED BY | DESIGNED BY | QUANTITIES BY | CHECKED BY | DATE

Date Plotted:Mon, 13 Feb 2006 - 9:32am
File Name:S:\m9901\1A\struct\s-12.dwg

FED. ROAD DIST. NO.	STATE	FED. AID PROJ. NO.	FISCAL YEAR	SHEET NO.	TOTAL SHEETS
HAWAII	HAW.	NH-A311(4)	2006	144	180

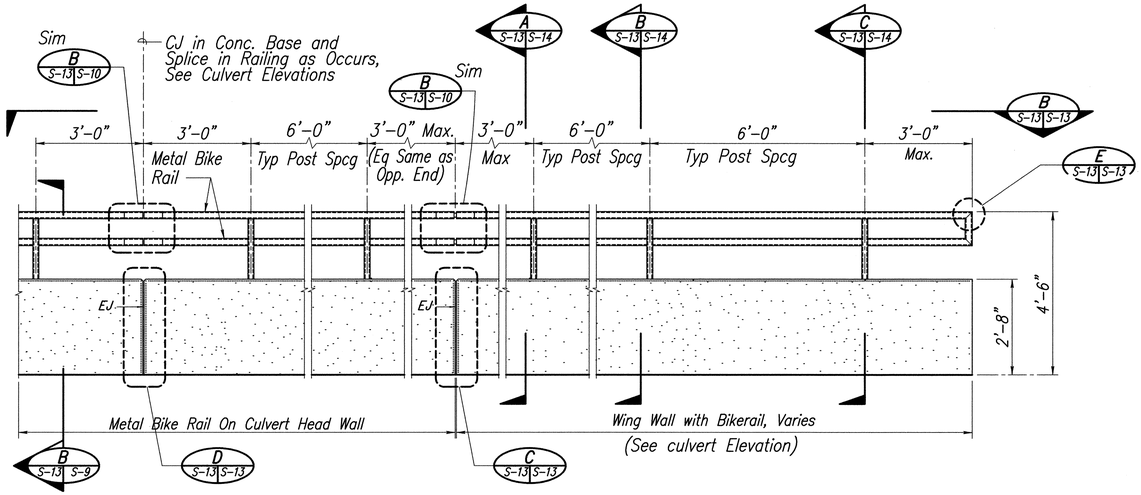

BIKERAIL – ELEVATION (A S-6 S-13)

SCALE: 1/2"= 1'-0"

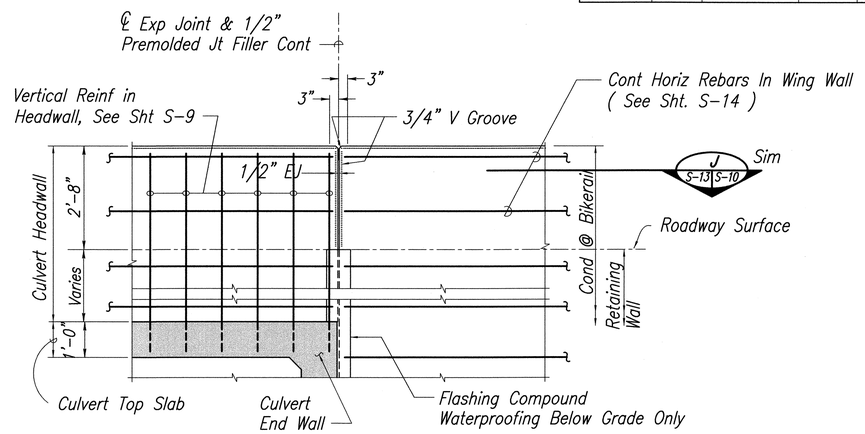

EXPANSION JOINT DETAIL (C S-13 S-13)

1/2"= 1'-0"

(Metal Bikerail not Shown for Clarity) S-6

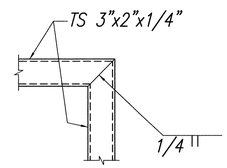

TYPICAL TUBE CONNECTION DETAIL (E S-13 S-13)

Not To Scale

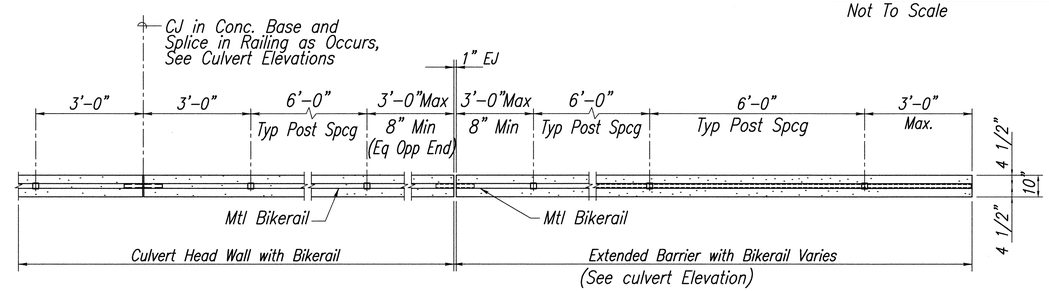

BIKERAIL – TOP VIEW (B S-13 S-13)

SCALE: 1/2"= 1'-0"

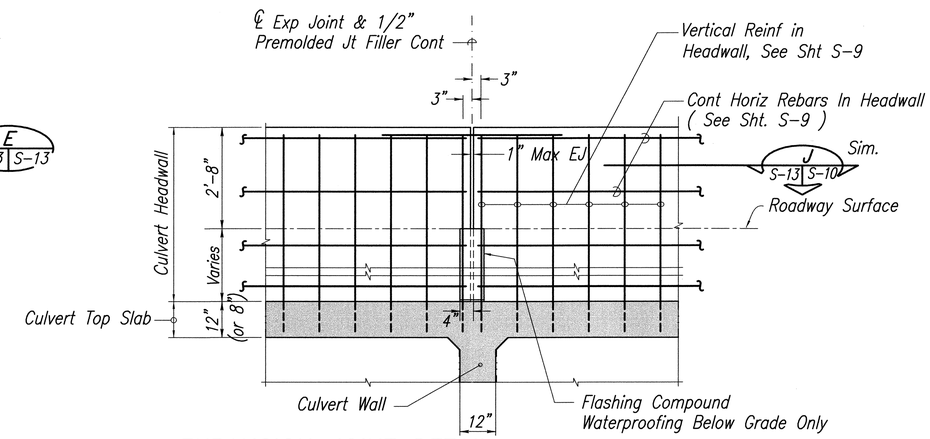

EXPANSION JOINT DETAIL (D S-13 S-13)

1/2"= 1'-0"

(Metal Bikerail not Shown for Clarity) S-6

GRAPHIC SCALE

2' 1' 0' 1' 2' 4' 8'

SCALE: 1/2" = 1'- 0"

DEAN A. DOI LICENSED PROFESSIONAL ENGINEER No. 5580-S HAWAII, U.S.A.

Exp: April 30, 2006

SATO & ASSOCIATES, INC.

THIS WORK WAS PREPARED BY ME OR UNDER MY SUPERVISION

STATE OF HAWAII
DEPARTMENT OF TRANSPORTATION
HIGHWAYS DIVISION

BOX CULVERT STA. 336+90
WING WALL 3 & 4-ELEVATIONS

MOKULELE HIGHWAY WIDENING
Vicinity of Kealia Pond Driveway
to
Piilani Highway
Federal-Aid Project No. NH-A311 (4)
Scale: as Shown Date: July 2005

SHEET No. S - 13 OF 35 SHEETS

Date Plotted:Mon, 13 Feb 2006 - 9:38am
File Name:S:\m9901\A\struct\s-13.dwg

ORIGINAL PLAN		DATE
	SURVEY PLOTTED BY	
	DRAWN BY	"
NOTE BOOK	TRACED BY	"
	DESIGNED BY	"
	QUANTITIES BY	"
No.	CHECKED BY	"

FED. ROAD DIST. NO.	STATE	FED. AID PROJ. NO.	FISCAL YEAR	SHEET NO.	TOTAL SHEETS
HAWAII	HAW.	NH-A311(4)	2006	145	180

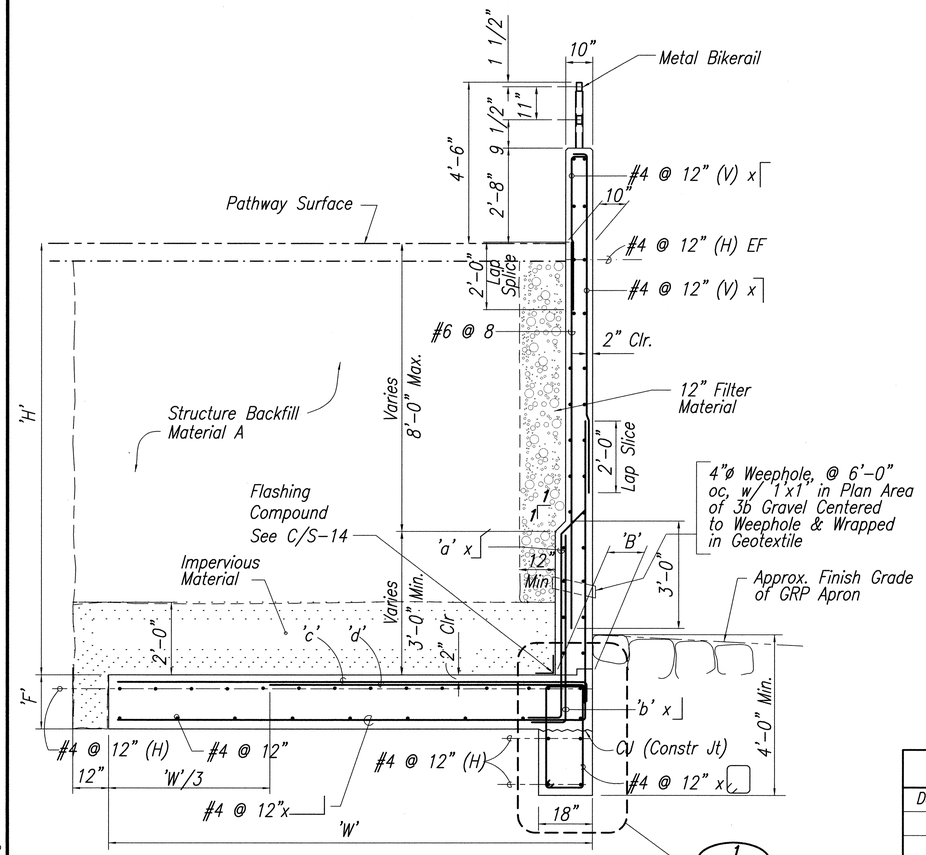

Condition @ Cut Off Wall 'H'> 8'

SECTION A (S-13 | S-14)

SCALE: 1/2" = 1'-0"

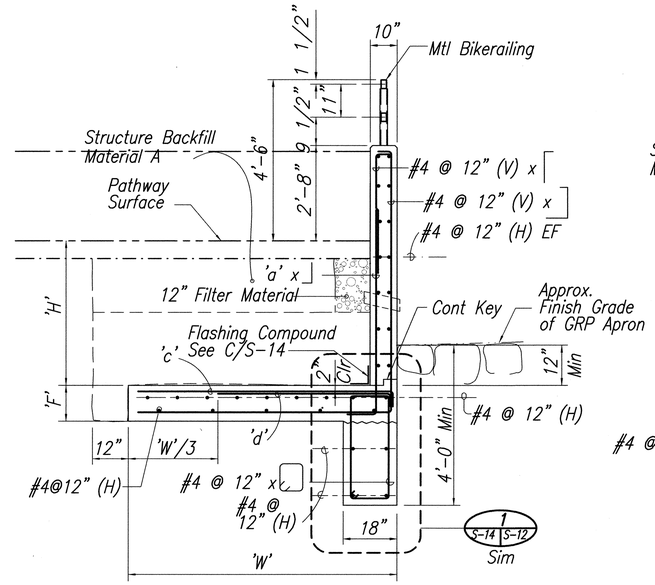

Condition @ Cut Off Wall 'H'≤ 8'

SECTION B (S-13 | S-14)

SCALE: 1/2" = 1'-0"

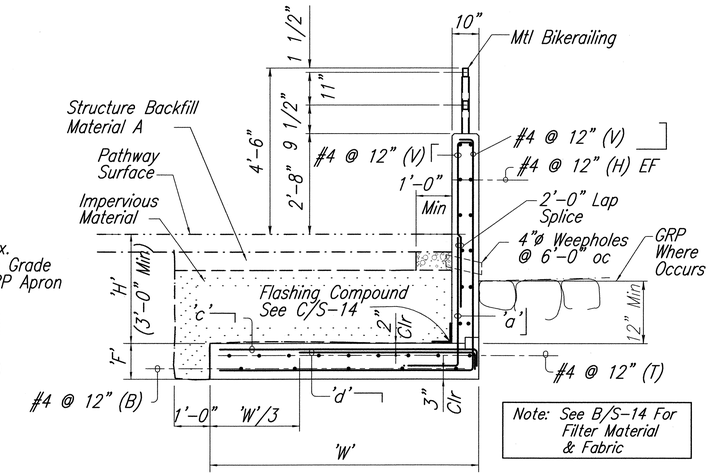

Condition @ End

SECTION C (S-13 | S-14)

1/2"= 1'-0"

WING WALLS #3 & #4 SCHEDULE

Desgn 'H'	3'	4'	6'	8'	10'	12'	14'
'F'	1'- 0"	1'- 0"	1'- 0"	1'- 2"	1'- 2"	1'- 4"	1'- 6"
'W'	7'- 6"	7'- 6"	8'- 0"	9'- 0"	9'- 9"	12'- 0"	13'- 6"
'B'	10"	10"	10"	10"	12"	14"	16"
'a' Bars	#4 @ 12	#4 @ 12	#5 @ 12	#6 @ 8	#6 @ 8	#6 @ 10	#6 @ 10
'b' Bars	———	———	———	———	#6 @ 24	#7 @ 10	#7 @ 10
'c' Bars	#7 @ 12	#7 @ 12	#6 @ 12	#7 @ 12	#8 @ 12	#8 @ 10	#8 @ 10
'd' Bars	———	———	#6 @ 12	#7 @ 12	#8 @ 12	#8 @ 10	#8 @ 10

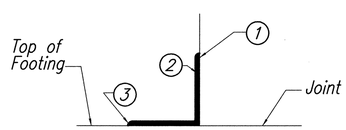

NOTE:

Flashing Compound for Construction Joint Waterproofing Shall Conform to Requirements of ASTM Specifications D4586 as a Plying Cement in the Construction of Membrane Waterproofing systems With Fabrics Conforming to ASTM SpecificationD1668 (Asphalt Types) The Product SHall Adhere to Damp Concrete and Masonry Surfaces.

1. Clean Concrete Surface Before Application of 1st Coat of Flashing Compound
2. 2nd Layer Fabric, See Specs
3. Finish Coat w/ Flashing Compound

FLASHING COMPOUND WATERPROOFING DETAIL C (S-14 | S-14)

NO SCALE:

S-9, S-12, S-16, S-34

GRAPHIC SCALE

2' 1' 0' 1' 2' 4' 6' 10'

SCALE: 1/2" = 1'-0"

ORIGINAL PLAN | SURVEY PLOTTED BY | DRAWN BY | TRACED BY | DESIGNED BY | QUANTITIES BY | CHECKED BY | DATE
NOTE BOOK | No.

Date Plotted:Mon, 13 Feb 2006 - 9:42am
File Name:S:\m5901\1Asaucts-14.dwg

DEAN A. DOI LICENSED PROFESSIONAL ENGINEER No. 5580-S HAWAII, U.S.A.
Exp: April 30, 2006
SATO & ASSOCIATES, INC.
THIS WORK WAS PREPARED BY ME OR UNDER MY SUPERVISION

STATE OF HAWAII
DEPARTMENT OF TRANSPORTATION
HIGHWAYS DIVISION

BOX CULVERT STA. 336+90
WING WALL 3 & 4-SECTIONS & SCHEDULE
MOKULELE HIGHWAY WIDENING
Vicinity of Kealia Pond Driveway to Piilani Highway
Federal-Aid Project No. NH-A311 (4)
Scale: as Shown Date: July 2005

SHEET No. S - 14 OF 35 SHEETS

FED. ROAD DIST. NO.	STATE	FED. AID PROJ. NO.	FISCAL YEAR	SHEET NO.	TOTAL SHEETS
HAWAII	HAW.	NH-A311(4)	2006	146	180

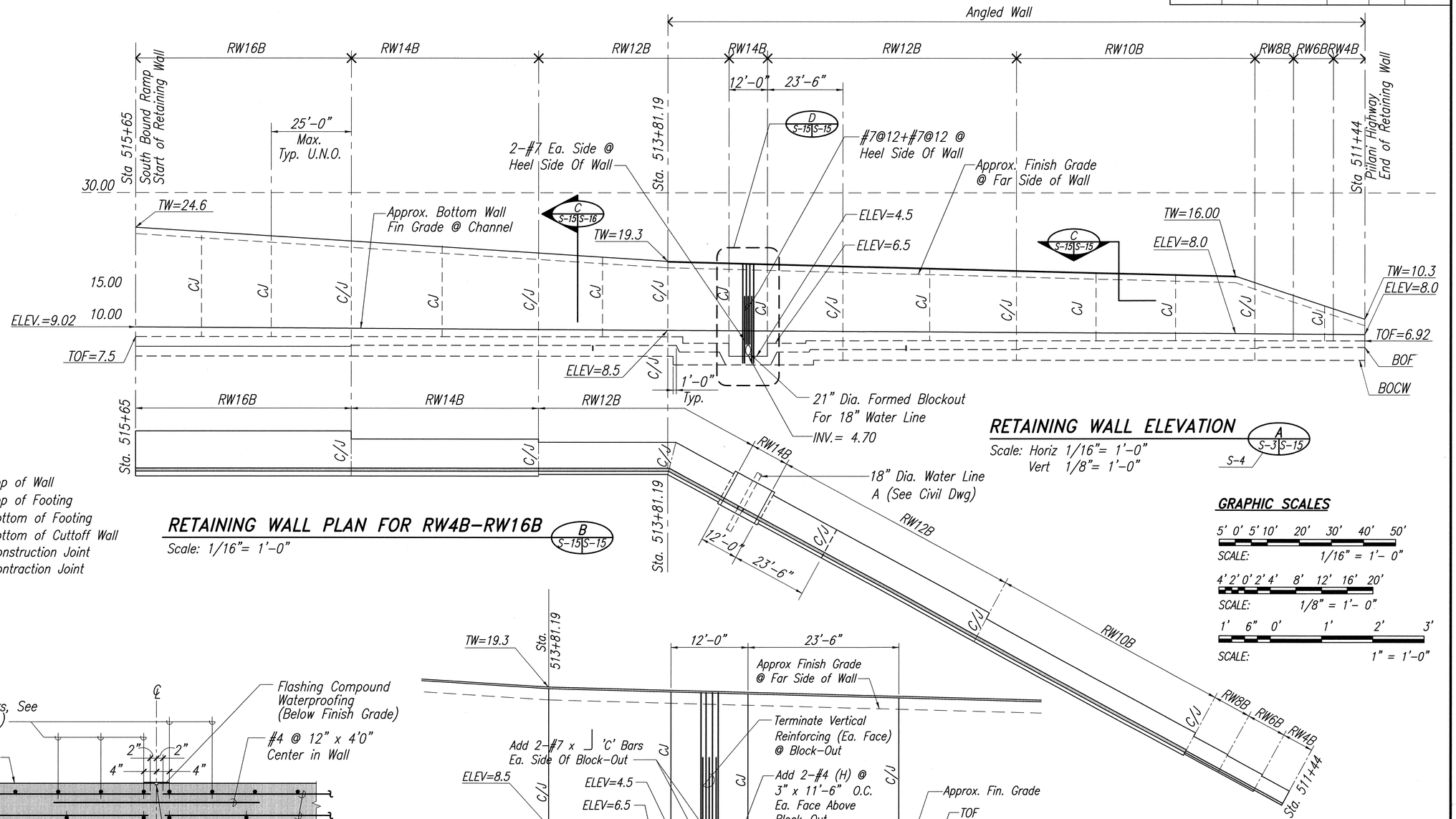

RETAINING WALL ELEVATION (A, S-3 | S-15)

Scale: Horiz 1/16"= 1'-0"
Vert 1/8"= 1'-0"

S-4

RETAINING WALL PLAN FOR RW4B-RW16B (B, S-15 | S-15)

Scale: 1/16"= 1'-0"

LEGEND:

TW ..... Indicates Top of Wall
TOF..... Indicates Top of Footing
BOF..... Indicates Bottom of Footing
BOCW..... Indicates Bottom of Cutoff Wall
C/J ..... Indicates Construction Joint
CJ ..... Indicates Contraction Joint

GRAPHIC SCALES

5' 0' 5' 10' 20' 30' 40' 50'
SCALE: 1/16" = 1'- 0"

4' 2' 0' 2' 4' 8' 12' 16' 20'
SCALE: 1/8" = 1'- 0"

1' 6" 0' 1' 2' 3'
SCALE: 1" = 1'-0"

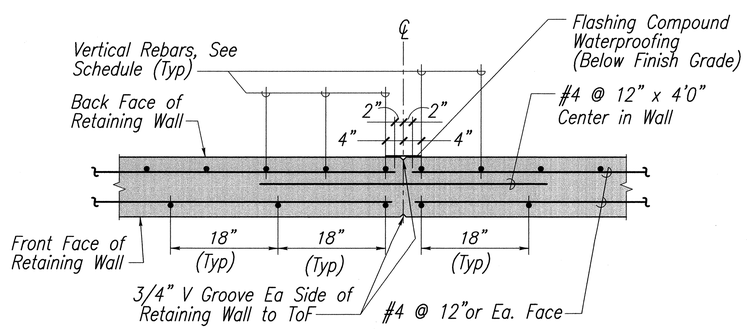

CONTRACTION JOINT (CJ) PLAN DETAIL (C, S-15 | S-15)

SCALE: 1"= 1'-0"

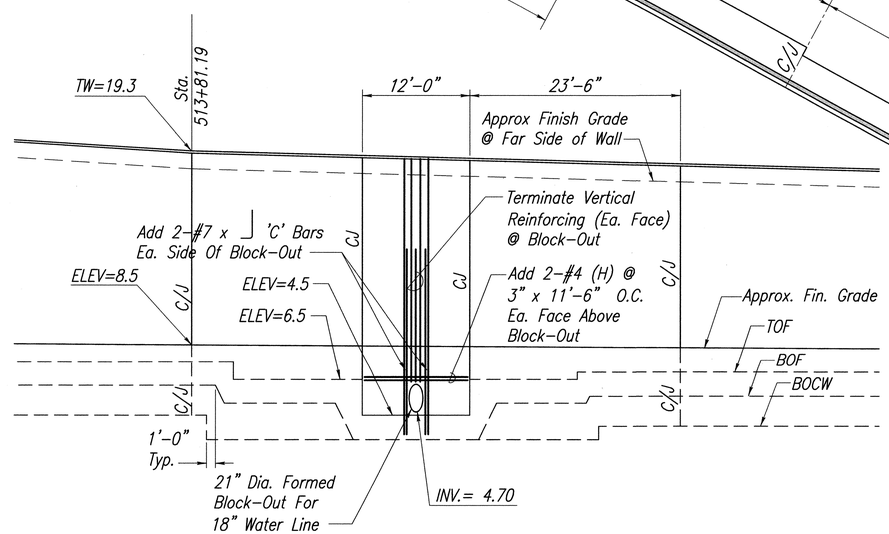

DETAIL (D, S-15 | S-15)

SCALE: 1/8"= 1'-0"

DEAN A. DOI
LICENSED PROFESSIONAL ENGINEER
No. 5580-S
HAWAII, U.S.A.
Exp: April 30, 2006

SATO & ASSOCIATES, INC.
THIS WORK WAS PREPARED BY ME OR UNDER MY SUPERVISION

STATE OF HAWAII
DEPARTMENT OF TRANSPORTATION
HIGHWAYS DIVISION

RETAINING WALL
ELEVATION AND DETAILS

MOKULELE HIGHWAY WIDENING
Vicinity of Kealia Pond Driveway
to
Piilani Highway
Federal-Aid Project No. NH-A311 (4)
Scale: as Shown Date: July 2005

SHEET No. S - 15 OF 35 SHEETS

Date Plotted:Mon, 13 Feb 2006 - 9:42am
File Name:S:\mp9011\Kstructs-15.dwg

ORIGINAL PLAN	SURVEY PLOTTED BY	DATE
	DRAWN BY	
	TRACED BY	
NOTE BOOK	DESIGNED BY	
	QUANTITIES BY	
No.	CHECKED BY	

FED. ROAD DIST. NO.	STATE	FED. AID PROJ. NO.	FISCAL YEAR	SHEET NO.	TOTAL SHEETS
HAWAII	HAW.	NH-A311(4)	2006	147	180

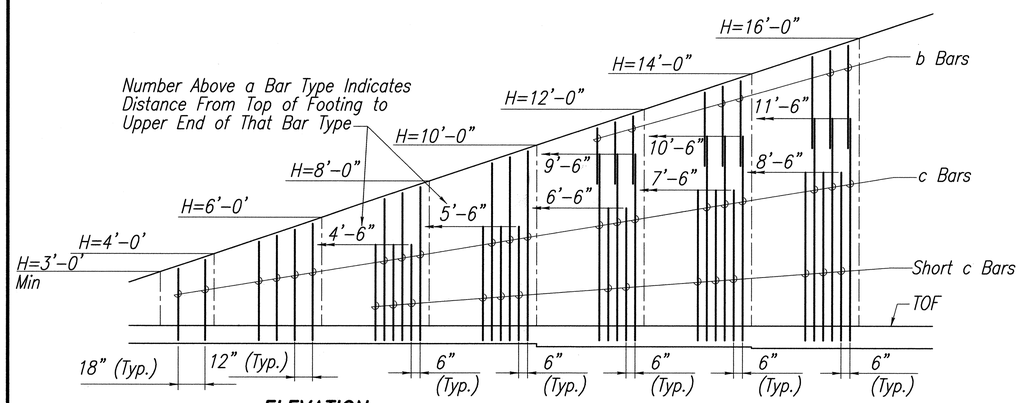

ELEVATION

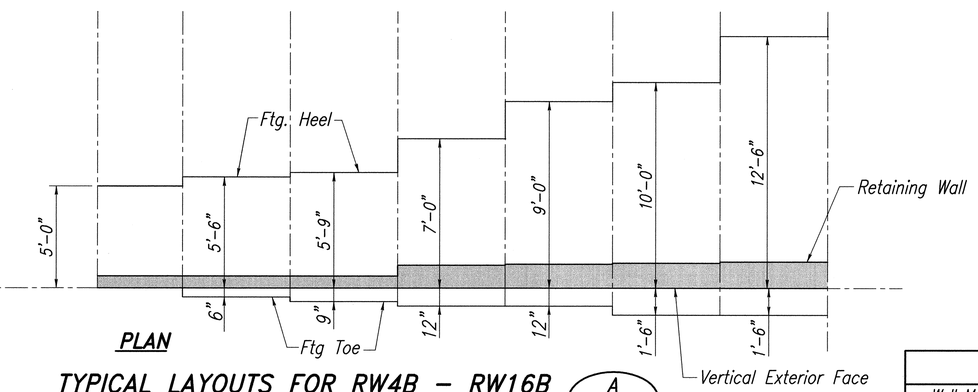

PLAN

TYPICAL LAYOUTS FOR RW4B – RW16B

SCALE: 1/4"= 1'-0"

A S-16 | S-16

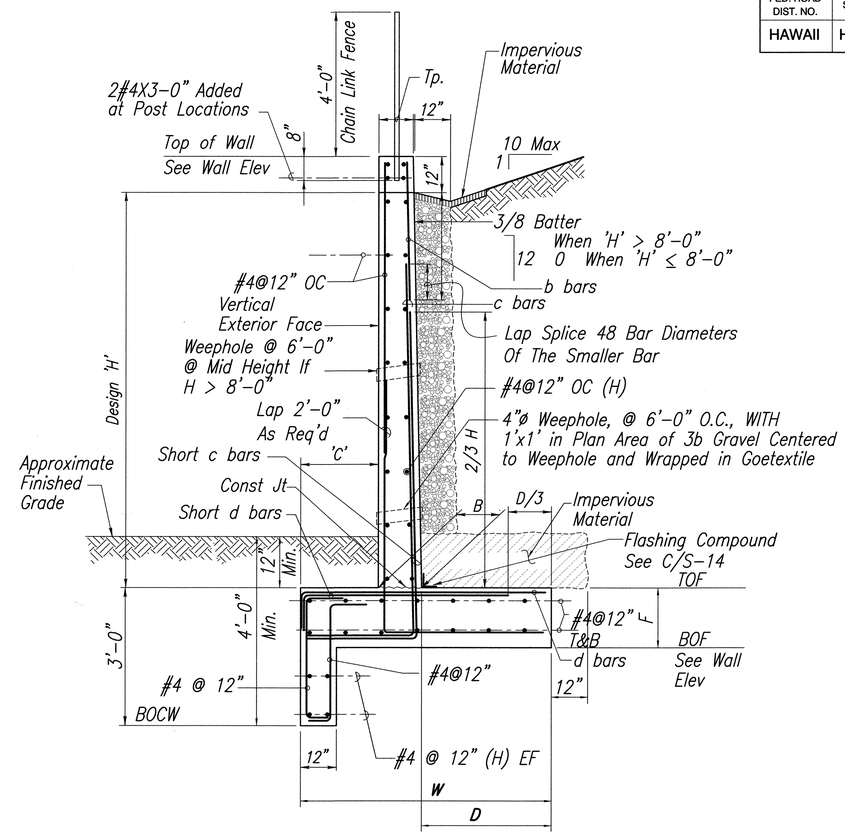

RETAINING WALL SECTION FOR RW4B – RW16B

SCALE: 1/4"= 1'-0" (Near Station 336+90)

C S-15 | S-16

S-6

RETAINING WALL SCHEDULE

Wall Mark	RW4B	RW6B	RW8B	RW10B	RW12B	RW14B	RW16B	
Design H	4'-0"	6'-0"	8'-0"	10'-0"	12'-0"	14'-0"	16'-0"	
W	5'-0"	6'-0"	6'-6"	8'-0"	10'-0"	11'-6"	14'-0"	
C	0'-0"	0'-6"	0'-9"	1'-0"	1'-0"	1'-6"	1'-6"	
tp	8"	8"	8"	11 1/2"	11 1/2"	11 1/2"	11 1/2"	
F Spread Ftg	1'-0"	1'-0"	1'-0"	1'-2"	1'-4"	1'-4"	1'-6"	
Batter	____	____	____	3/8 : 12	3/8 : 12	3/8 : 12	3/8 : 12	
B	____	____	____	15 5/8"	16 3/8"	17 1/8"	17 7/8"	
b bars	____	____	____	____	#5@24"	#6@24"	#6@24"	
c bars	#5@12"	#5@12"	#5@12" #5@12"(s)	#5@12" #5@12"(s)	#6@12" #6@12"(s)	#7@12" #7@12"(s)	#8@12" #8@12"(s)	
d bars	#5@12"	#7@12"	#6@12" #6@12"(s)	#7@12" #7@12"(s)	#8@12" #8@12"(s)	#8@10" #8@10"(s)	#9@10" #9@10"(s)	

Note: (s) Indicates Short Rebars

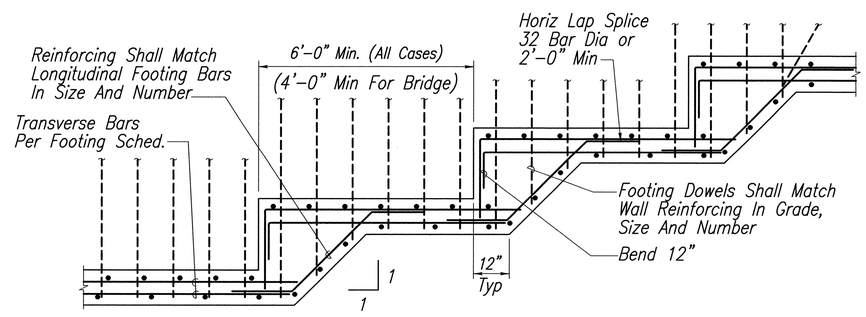

TYPICAL STEPPED FOOTING FOR RETAINING/WING WALL

SCALE: 1/4"= 1'-0"

B S-16 | S-16

Date Plotted:Mon, 13 Feb 2006 - 9:46am
File Name:S:\n6901\1A\struct\s-16.dwg

ORIGINAL PLAN	SURVEY PLOTTED BY	DATE
	DRAWN BY	
	TRACED BY	
NOTE BOOK	DESIGNED BY	
	QUANTITIES BY	
No.	CHECKED BY	

DEAN A. DOI
LICENSED PROFESSIONAL ENGINEER
No. 5580-S
HAWAII, U.S.A.
Exp: April 30, 2006

SATO & ASSOCIATES, INC.

THIS WORK WAS PREPARED BY ME OR UNDER MY SUPERVISION

STATE OF HAWAII
DEPARTMENT OF TRANSPORTATION
HIGHWAYS DIVISION

RETAINING WALL
LAYOUTS, SECTION & SCHEDULE
MOKULELE HIGHWAY WIDENING
Vicinity of Kealia Pond Driveway
to
Piilani Highway
Federal-Aid Project No. NH-A311 (4)
Scale: as Shown Date: July 2005

SHEET No. S-16 OF 35 SHEETS

FED. ROAD DIST. NO.	STATE	FED. AID PROJ. NO.	FISCAL YEAR	SHEET NO.	TOTAL SHEETS
HAWAII	HAW.	NH-A311(4)	2006	148	180

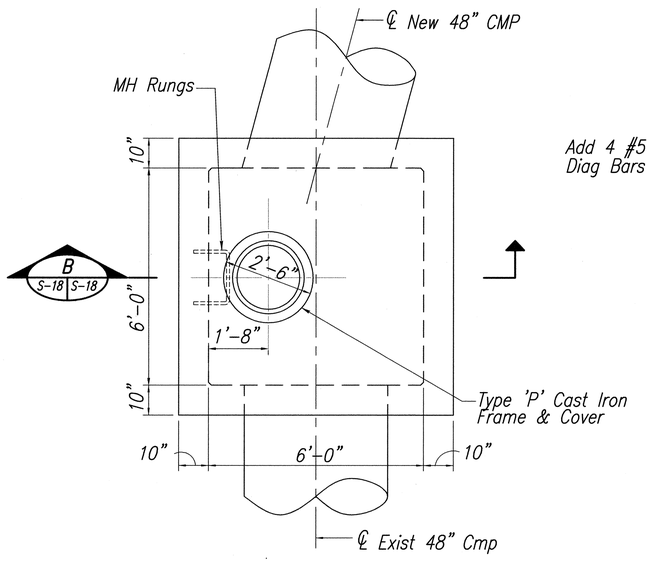

PLAN (A, S-3 | S-18)
SCALE: 1/2"= 1'-0"

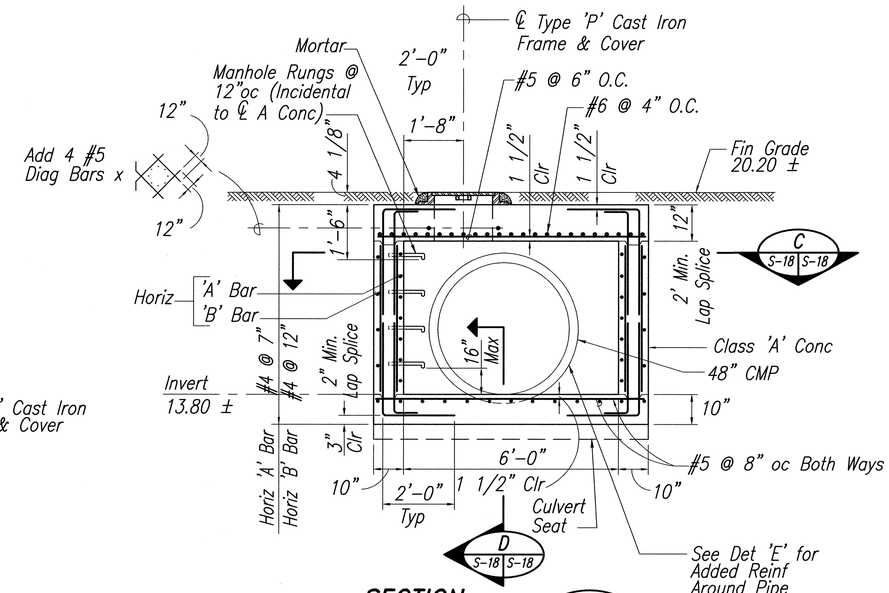

SECTION (B, S-18 | S-18)
SCALE: 1/2"= 1'-0"

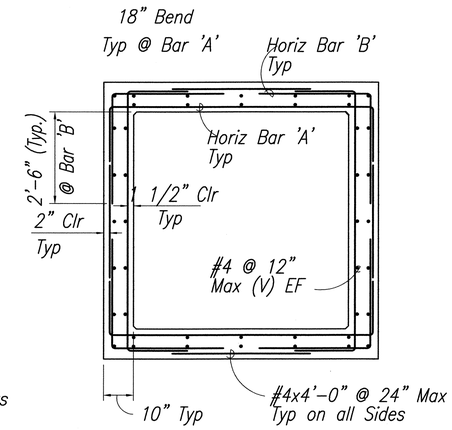

PLAN SECTION (C, S-30 | S-30)
SCALE: 1/2"= 1'-0"

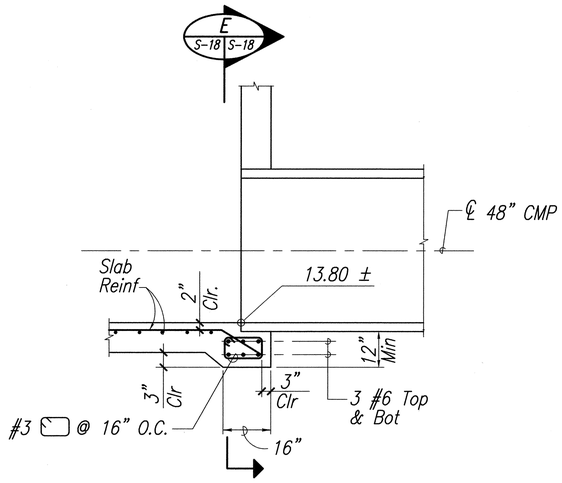

SEAT DETAIL (D, S-18 | S-18)
SCALE: 1/2"= 1'-0"

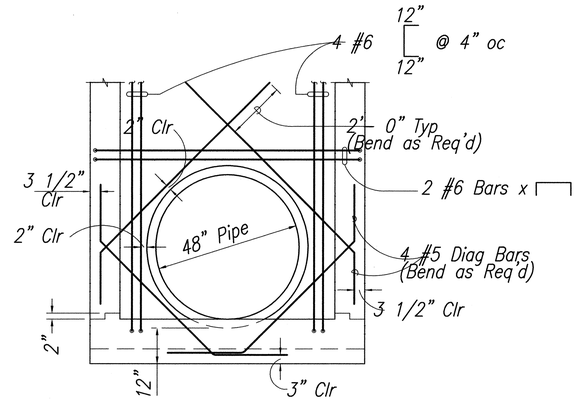

REINFORCING DETAIL (E, S-18 | S-18)
SCALE: 1/2"= 1'-0"

STORM DRAIN MANHOLE DETAILS
SCALE: 1/2"= 1'-0"

GRAPHIC SCALE

2' 1' 0' 1' 2' 4' 6'

SCALE: 1/2" = 1'- 0"

DEAN A. DOI
LICENSED PROFESSIONAL ENGINEER
No. 5580-S
HAWAII, U.S.A.
Exp: April 30, 2006

SATO & ASSOCIATES, INC.
THIS WORK WAS PREPARED BY ME OR UNDER MY SUPERVISION

STATE OF HAWAII
DEPARTMENT OF TRANSPORTATION
HIGHWAYS DIVISION

DRAIN LINE 'D' DETAILS

MOKULELE HIGHWAY WIDENING
Vicinity of Kealia Pond Driveway
to
Piilani Highway
Federal-Aid Project No. NH-A311 (4)
Scale: as Shown Date: July 2005

SHEET No. S - 18 OF 35 SHEETS

ORIGINAL PLAN	SURVEY PLOTTED BY	DATE
	DRAWN BY	
NOTE BOOK	TRACED BY	
	DESIGNED BY	
	QUANTITIES BY	
No.	CHECKED BY	

Date Plotted:Mon, 13 Feb 2006 - 9:51am
File Name:S:\n5901\1\Astructs-18.dwg

FED. ROAD DIST. NO.	STATE	FED. AID PROJ. NO.	FISCAL YEAR	SHEET NO.	TOTAL SHEETS
HAWAII	HAW.	NH-A311(4)	2006	149	180

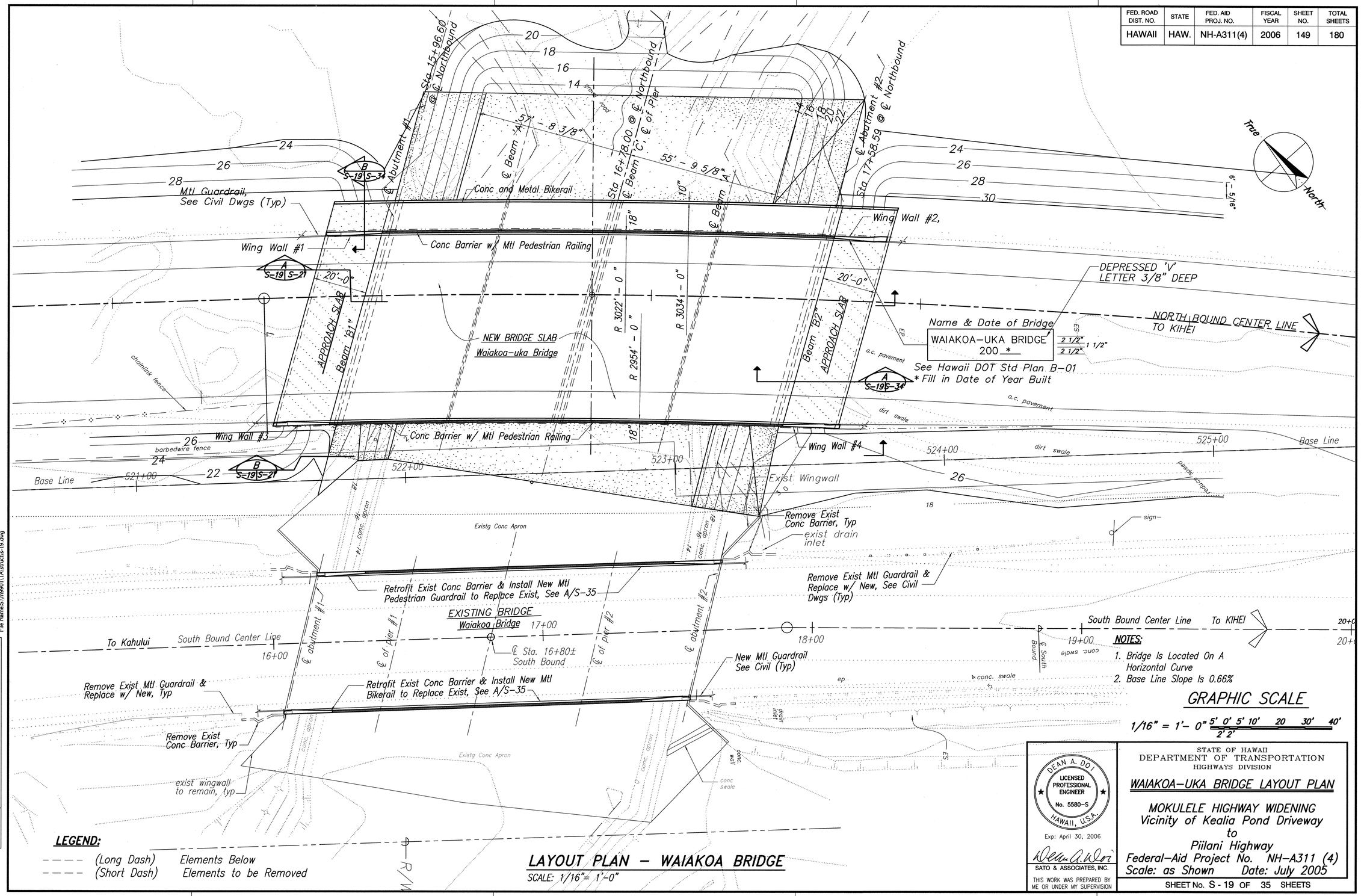

NOTES:

1. Bridge Is Located On A Horizontal Curve
2. Base Line Slope Is 0.66%

GRAPHIC SCALE

1/16" = 1'- 0" 5' 0' 5' 10' 20 30' 40' 2' 2'

DEAN A. DOI
LICENSED PROFESSIONAL ENGINEER
No. 5580-S
HAWAII, U.S.A.
Exp: April 30, 2006

SATO & ASSOCIATES, INC.

THIS WORK WAS PREPARED BY ME OR UNDER MY SUPERVISION

STATE OF HAWAII
DEPARTMENT OF TRANSPORTATION
HIGHWAYS DIVISION

WAIAKOA-UKA BRIDGE LAYOUT PLAN

MOKULELE HIGHWAY WIDENING
Vicinity of Kealia Pond Driveway
to
Piilani Highway
Federal-Aid Project No. NH-A311 (4)
Scale: as Shown Date: July 2005

SHEET No. S - 19 OF 35 SHEETS

Date Plotted:Mon, 13 Feb 2006 - 9:53am
File Name:S:\m9901\1A\structs-19.dwg

ORIGINAL PLAN	SURVEY PLOTTED BY	DATE
	DRAWN BY	
NOTE BOOK	TRACED BY	
	DESIGNED BY	
	QUANTITIES BY	
No.	CHECKED BY	

FED. ROAD DIST. NO.	STATE	FED. AID PROJ. NO.	FISCAL YEAR	SHEET NO.	TOTAL SHEETS
HAWAII	HAW.	NH-A311(4)	2006	150	180

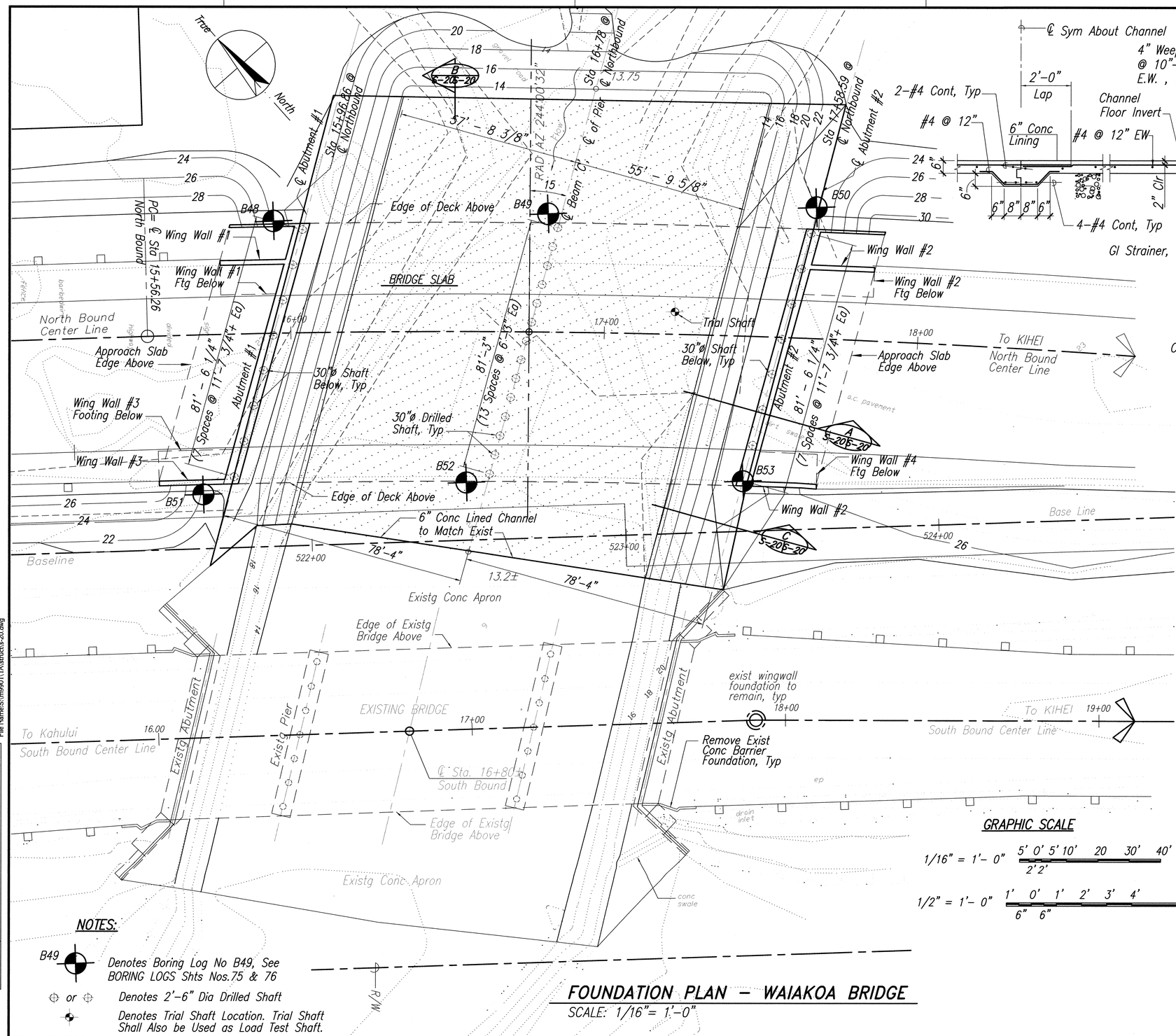

FOUNDATION PLAN – WAIAKOA BRIDGE

SCALE: 1/16"= 1'-0"

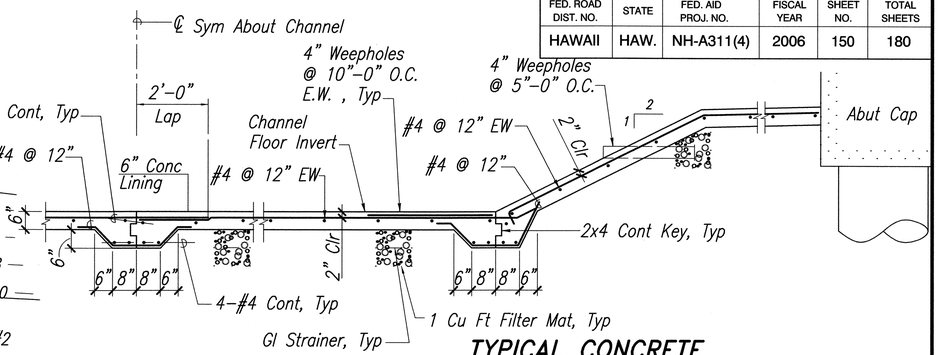

TYPICAL CONCRETE CHANNEL SECTION

SCALE: 1/2"= 1'-0"

A S-20 S-20

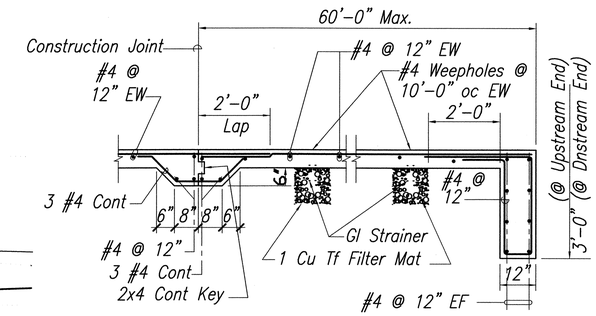

SECTION

SCALE: 1/2"= 1'-0"

B S-20 S-20

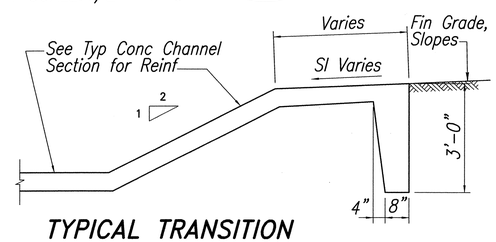

TYPICAL TRANSITION OF CHANNEL LINING

SCALE: 1/2"= 1'-0"

C S-20 S-20

LEGEND:

- - - - - (Long Dash) Elements Below or Above
- - - - - (Short Dash) Elements to Be Removed

GRAPHIC SCALE

1/16" = 1'- 0" 5' 0' 5' 10' 20 30' 40' (2' 2')

1/2" = 1'- 0" 1' 0' 1' 2' 3' 4' 6' (6" 6")

NOTES:

B49 Denotes Boring Log No B49, See BORING LOGS Shts Nos.75 & 76

or Denotes 2'-6" Dia Drilled Shaft

Denotes Trial Shaft Location. Trial Shaft Shall Also be Used as Load Test Shaft.

DEAN A. DOI LICENSED PROFESSIONAL ENGINEER No. 5580-S HAWAII, U.S.A.

Exp: April 30, 2006

SATO & ASSOCIATES, INC.

THIS WORK WAS PREPARED BY ME OR UNDER MY SUPERVISION

STATE OF HAWAII
DEPARTMENT OF TRANSPORTATION
HIGHWAYS DIVISION

WAIAKOA–UKA BRIDGE FOUNDATION PLAN

MOKULELE HIGHWAY WIDENING
Vicinity of Kealia Pond Driveway to Piilani Highway
Federal–Aid Project No. NH–A311 (4)
Scale: as Shown Date: July 2005

SHEET No. S - 20 OF 35 SHEETS

ORIGINAL PLAN | SURVEY PLOTTED BY | DRAWN BY | TRACED BY | DESIGNED BY | QUANTITIES BY | CHECKED BY | DATE | NOTE BOOK No. ____

Date Plotted:Mon, 13 Feb 2006 - 9:54am
File Name:S:\n0590111\Astructs-20.dwg

FED. ROAD DIST. NO.	STATE	FED. AID PROJ. NO.	FISCAL YEAR	SHEET NO.	TOTAL SHEETS
HAWAII	HAW.	NH-A311(4)	2006	151	180

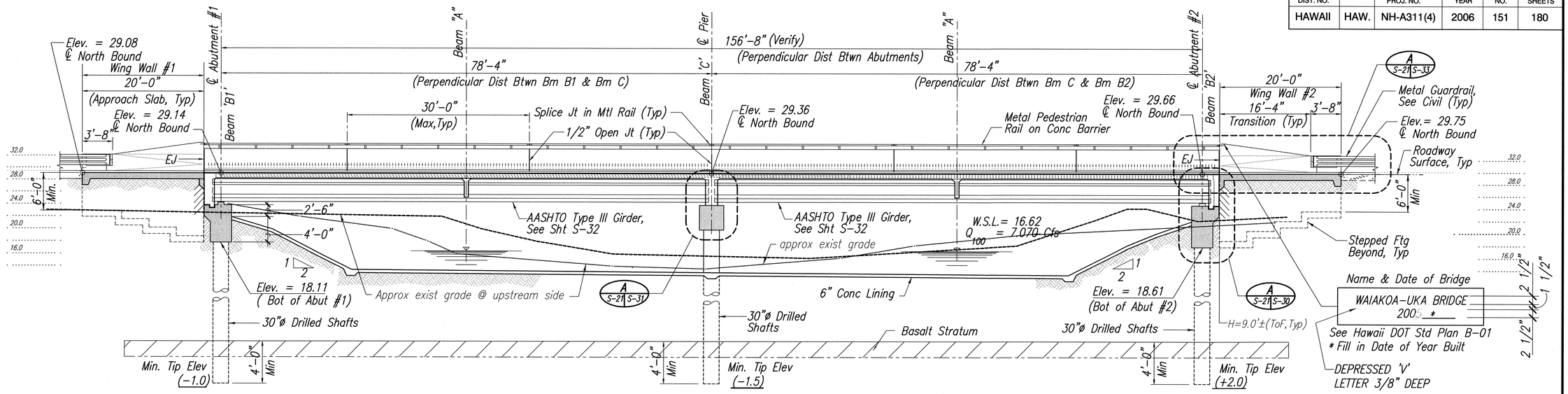

LONGITUDINAL SECTION – LOOKING UPSTREAM (A S-19 S-21)

SCALE: 1/8"= 1'-0"

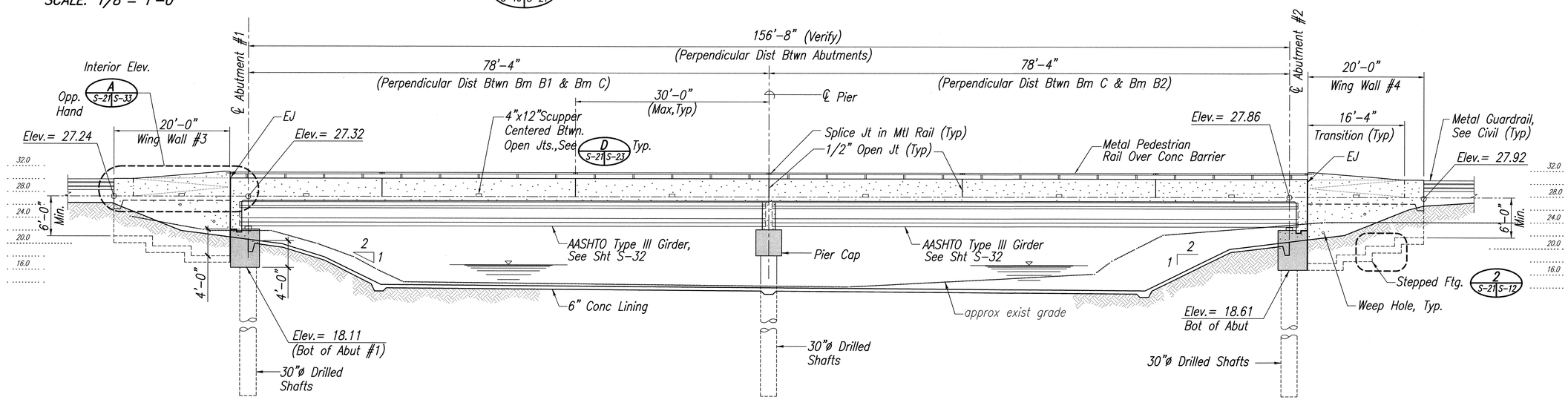

ELEVATION – LOOKING UPSTREAM (B S-19 S-21)

SCALE: 1/8"= 1'-0"

GRAPHIC SCALE

4' 2' 0' 2' 4' 8' 12' 16' 20'

SCALE: 1/8" = 1'- 0"

Date Plotted:Mon, 13 Feb 2006 - 10:25am
File Name:S:\m9901\1A\struct\s-21.dwg

ORIGINAL PLAN	SURVEY PLOTTED BY	DATE
	DRAWN BY	
	TRACED BY	
NOTE BOOK	DESIGNED BY	
	QUANTITIES BY	
No.	CHECKED BY	

DEAN A. DOI
LICENSED PROFESSIONAL ENGINEER
No. 5580-S
HAWAII, U.S.A.
Exp: April 30, 2006

SATO & ASSOCIATES, INC.

THIS WORK WAS PREPARED BY ME OR UNDER MY SUPERVISION

STATE OF HAWAII
DEPARTMENT OF TRANSPORTATION
HIGHWAYS DIVISION

WAIAKOA–UKA BRIDGE

LONGITUDINAL SECTION AND ELEVATIONS

MOKULELE HIGHWAY WIDENING
Vicinity of Kealia Pond Driveway
to
Piilani Highway

Federal–Aid Project No. NH–A311 (4)
Scale: as Shown Date: July 2005

SHEET No. S - 21 OF 35 SHEETS

FED. ROAD DIST. NO.	STATE	FED. AID PROJ. NO.	FISCAL YEAR	SHEET NO.	TOTAL SHEETS
HAWAII	HAW.	NH-A311(4)	2006	152	180

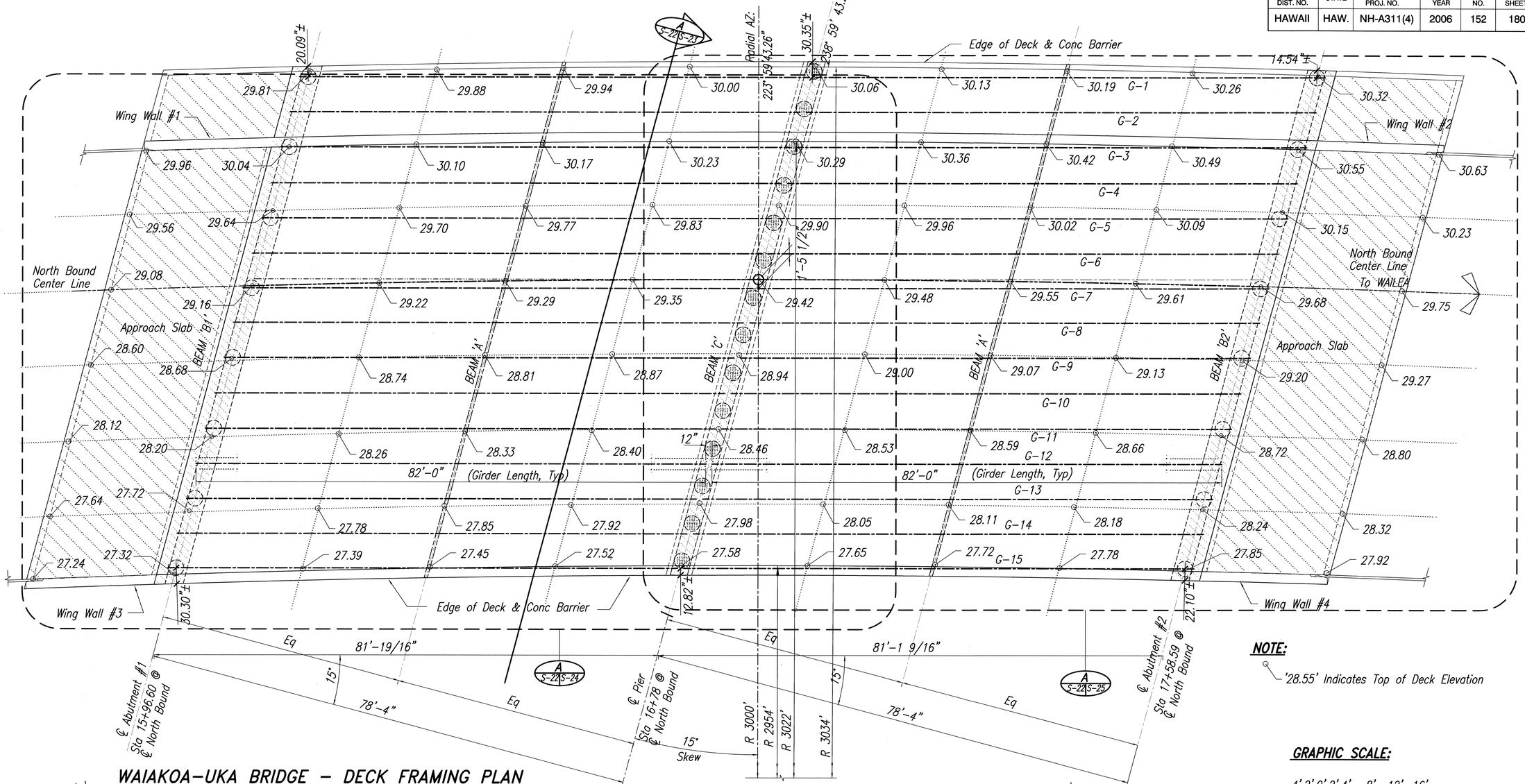

WAIAKOA-UKA BRIDGE - DECK FRAMING PLAN

Scale : 1/8" = 1'-0"

NOTE:

'28.55' Indicates Top of Deck Elevation

GRAPHIC SCALE:

4' 2' 0' 2' 4' 8' 12' 16'

SCALE: 1/8" = 1'- 0"

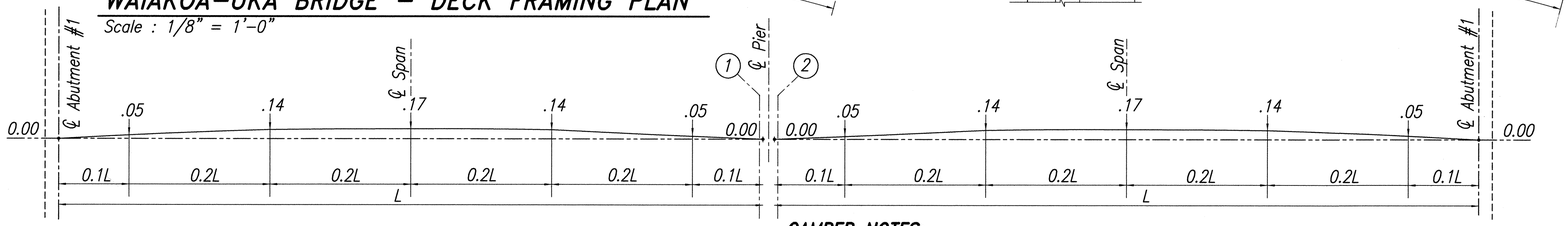

DECK SLAB CAMBER DIAGRAM

Not to Scale

CAMBER NOTES:

1. '.05' Number Indicates Deck Camber in Feet
2. Before Pouring Deck Slab Deck Form Shall Be Raised Above The Theorical Deck Soffit Elevation by The Camber

DEAN A. DOI
LICENSED PROFESSIONAL ENGINEER
No. 5580-S
HAWAII, U.S.A.
Exp: April 30, 2006

SATO & ASSOCIATES, INC.

THIS WORK WAS PREPARED BY ME OR UNDER MY SUPERVISION

STATE OF HAWAII
DEPARTMENT OF TRANSPORTATION
HIGHWAYS DIVISION

WAIAKOA-UKA BRIDGE
DECK FRAMING PLAN
MOKULELE HIGHWAY WIDENING
Vicinity of Kealia Pond Driveway
to
Piilani Highway
Federal-Aid Project No. NH-A311 (4)
Scale: as Shown Date: July 2005

SHEET No. S - 22 OF 35 SHEETS

ORIGINAL PLAN | NOTE BOOK No. ____ | SURVEY PLOTTED BY | DRAWN BY | TRACED BY | DESIGNED BY | QUANTITIES BY | CHECKED BY | DATE

Date Plotted:Mon, 13 Feb 2006 - 10:27am
File Name:S:\ns9901\Astruct\s-22.dwg

FED. ROAD DIST. NO.	STATE	FED. AID PROJ. NO.	FISCAL YEAR	SHEET NO.	TOTAL SHEETS
HAWAII	HAW.	NH-A311(4)	2006	153	180

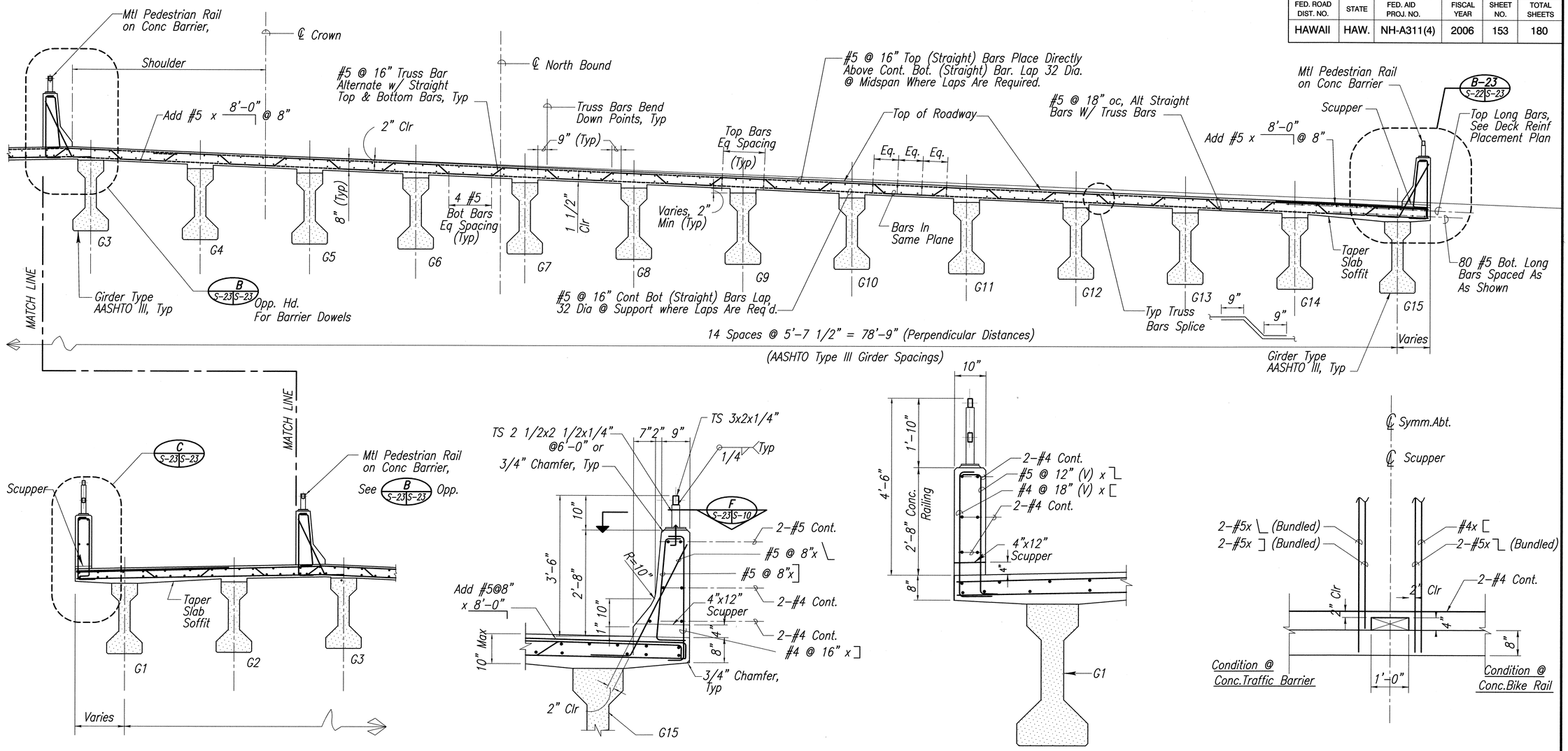

CROSS SECTION – WAIAKOA–UKA BRIDGE (A S-22 S-23)

SCALE: 3/8"= 1'-0"

CONCRETE TRAFFIC BARRIER DETAIL (B S-23 S-23)

SCALE: 3/4"= 1'-0"

S-33

CONCRETE BIKE RAIL DETAIL (C S-23 S-23)

SCALE: 3/4"= 1'-0"

ELEVATION SCUPPER DETAIL (D S-23 S-23)

SCALE: 3/4"= 1'-0"

S-21

GRAPHIC SCALES

4' 3' 2' 1' 0 2' 4' 8'

SCALE: 3/8" = 1'- 0"

1' 6" 0' 6" 1' 2' 3' 5'

SCALE: 3/4"= 1'- 0"

ORIGINAL PLAN	SURVEY PLOTTED BY	DATE
	DRAWN BY	"
	TRACED BY	"
NOTE BOOK	DESIGNED BY	"
	QUANTITIES BY	"
No.	CHECKED BY	"

Date Plotted:Mon, 13 Feb 2006 - 10:29am
File Name:S:\m9901\Astruct\s-23.dwg

DEAN A. DOI
LICENSED PROFESSIONAL ENGINEER
No. 5580-S
HAWAII, U.S.A.
Exp: April 30, 2006

SATO & ASSOCIATES, INC.
THIS WORK WAS PREPARED BY ME OR UNDER MY SUPERVISION

STATE OF HAWAII
DEPARTMENT OF TRANSPORTATION
HIGHWAYS DIVISION

WAIAKOA–UKA BRIDGE CROSS SECTION

MOKULELE HIGHWAY WIDENING
Vicinity of Kealia Pond Driveway
to
Piilani Highway
Federal–Aid Project No. NH–A311 (4)
Scale: as Shown Date: July 2005

SHEET No. S - 23 OF 35 SHEETS

FED. ROAD DIST. NO.	STATE	FED. AID PROJ. NO.	FISCAL YEAR	SHEET NO.	TOTAL SHEETS
HAWAII	HAW.	NH-A311(4)	2006	154	180

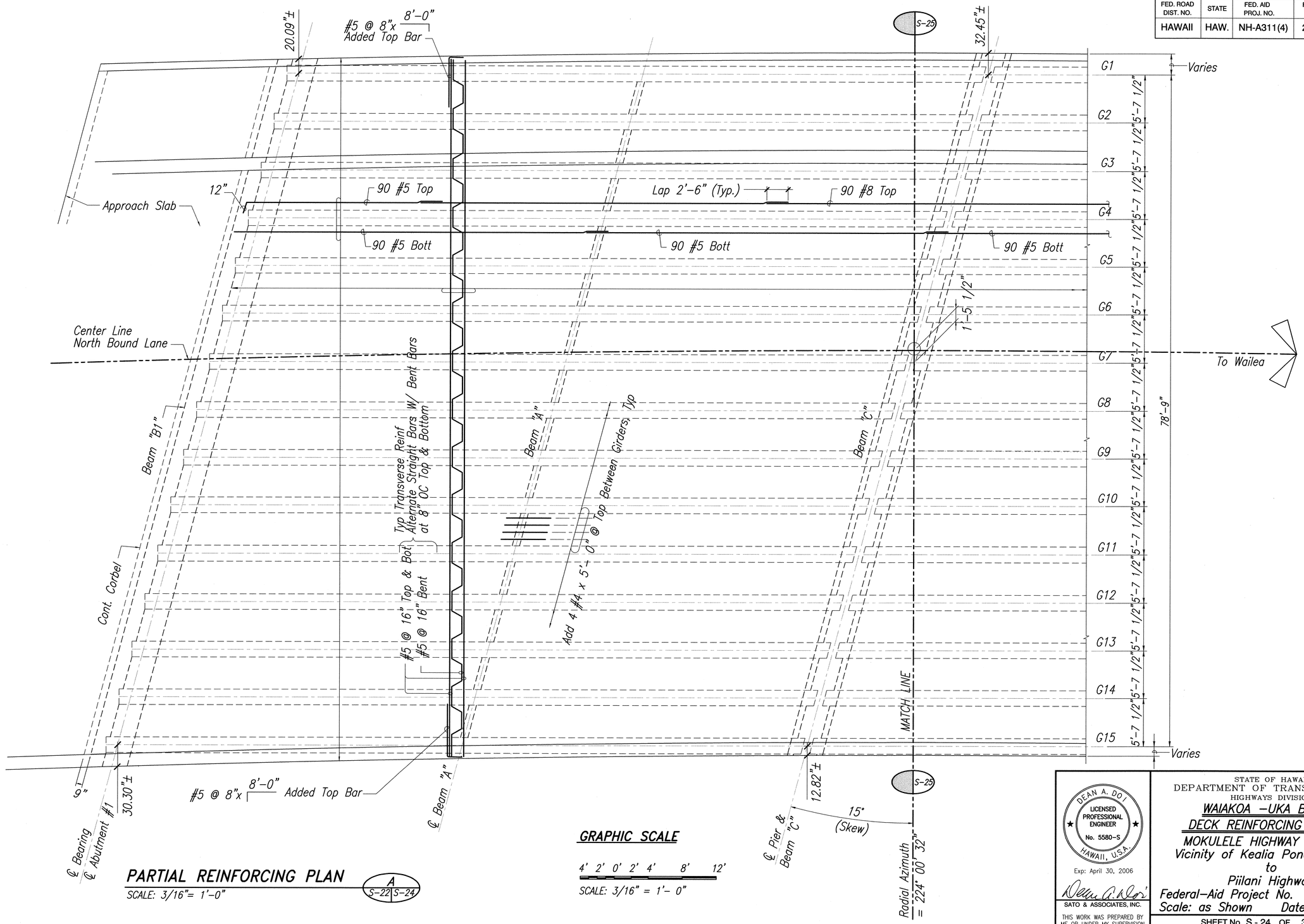

PARTIAL REINFORCING PLAN

SCALE: 3/16"= 1'-0"

A
S-22 | S-24

GRAPHIC SCALE

4' 2' 0' 2' 4' 8' 12'

SCALE: 3/16" = 1'- 0"

Date Plotted:Mon, 13 Feb 2006 - 10:31am
File Name:S:\m9901\Astructs-24.dwg

ORIGINAL PLAN	SURVEY PLOTTED BY	DATE
	DRAWN BY	"
NOTE BOOK	TRACED BY	"
	DESIGNED BY	"
	QUANTITIES BY	"
No.	CHECKED BY	"

DEAN A. DOI
LICENSED PROFESSIONAL ENGINEER
No. 5580-S
HAWAII, U.S.A.
Exp: April 30, 2006

SATO & ASSOCIATES, INC.

THIS WORK WAS PREPARED BY ME OR UNDER MY SUPERVISION

STATE OF HAWAII
DEPARTMENT OF TRANSPORTATION
HIGHWAYS DIVISION

WAIAKOA –UKA BRIDGE
DECK REINFORCING PLAN–1

MOKULELE HIGHWAY WIDENING
Vicinity of Kealia Pond Driveway
to
Piilani Highway

Federal–Aid Project No. NH–A311 (4)
Scale: as Shown Date: July 2005

SHEET No. S - 24 OF 35 SHEETS

FED. ROAD DIST. NO.	STATE	FED. AID PROJ. NO.	FISCAL YEAR	SHEET NO.	TOTAL SHEETS
HAWAII	HAW.	NH-A311(4)	2006	155	180

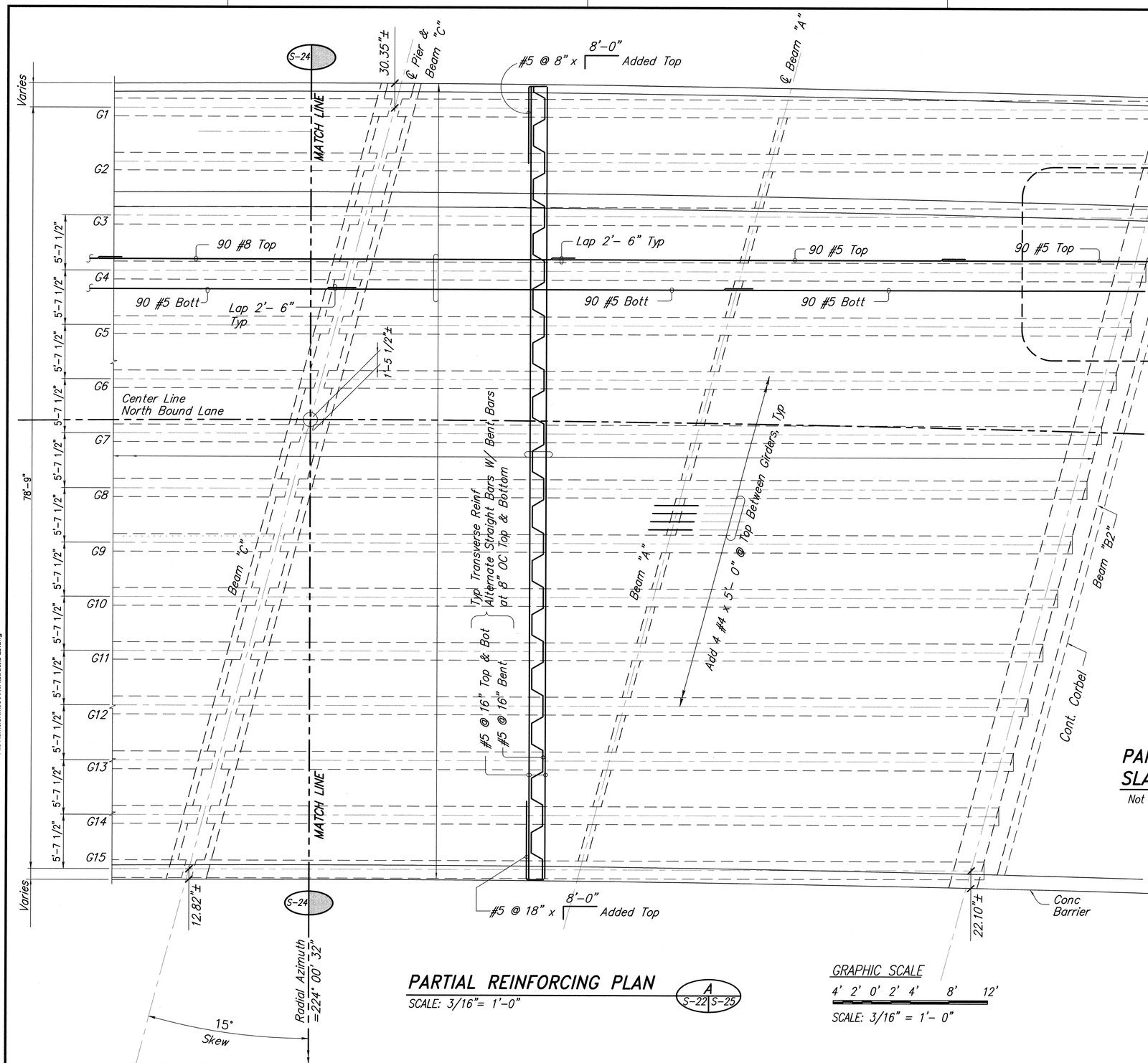

PARTIAL REINFORCING PLAN

SCALE: 3/16"= 1'-0"

GRAPHIC SCALE

4' 2' 0' 2' 4' 8' 12'

SCALE: 3/16" = 1'- 0"

PARTIAL PLAN–TYPICAL ARRANGEMENT OF DECK SLAB TRANSVERSE REINF AT SKEWED ENDS

B S-25 S-25

Not to Scale

Date Plotted:Mon, 13 Feb 2006 - 10:35am
File Name:S:\m9901\Astruct\s-25.dwg

ORIGINAL PLAN	SURVEY PLOTTED BY	DATE
	DRAWN BY	" "
NOTE BOOK	TRACED BY	" "
	DESIGNED BY	" "
No.	QUANTITIES BY	" "
	CHECKED BY	" "

DEAN A. DOI
LICENSED PROFESSIONAL ENGINEER
No. 5580-S
HAWAII, U.S.A.
Exp: April 30, 2006

SATO & ASSOCIATES, INC.

THIS WORK WAS PREPARED BY ME OR UNDER MY SUPERVISION

STATE OF HAWAII
DEPARTMENT OF TRANSPORTATION
HIGHWAYS DIVISION

WAIAKOA–UKA BRIDGE
DECK REINFORCING PLAN–2
MOKULELE HIGHWAY WIDENING
Vicinity of Kealia Pond Driveway to Piilani Highway
Federal–Aid Project No. NH–A311 (4)
Scale: as Shown Date: July 2005

SHEET No. S - 25 OF 35 SHEETS

FED. ROAD DIST. NO.	STATE	FED. AID PROJ. NO.	FISCAL YEAR	SHEET NO.	TOTAL SHEETS
HAWAII	HAW.	NH-A311(4)	2006	156	180

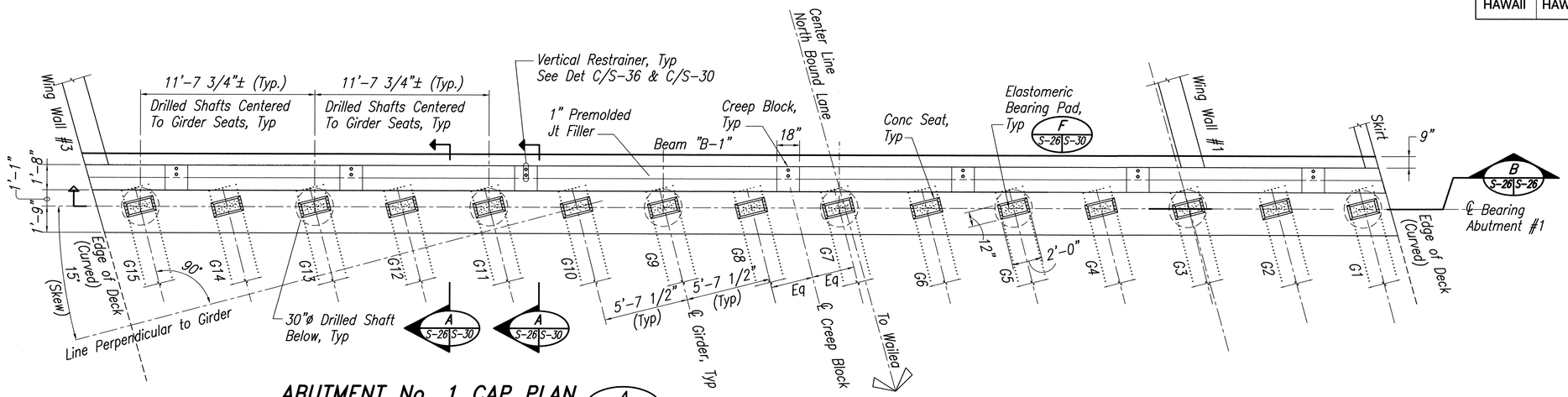

ABUTMENT No. 1 CAP PLAN (A S-26 S-26)

SCALE: 1/4"= 1'-0"

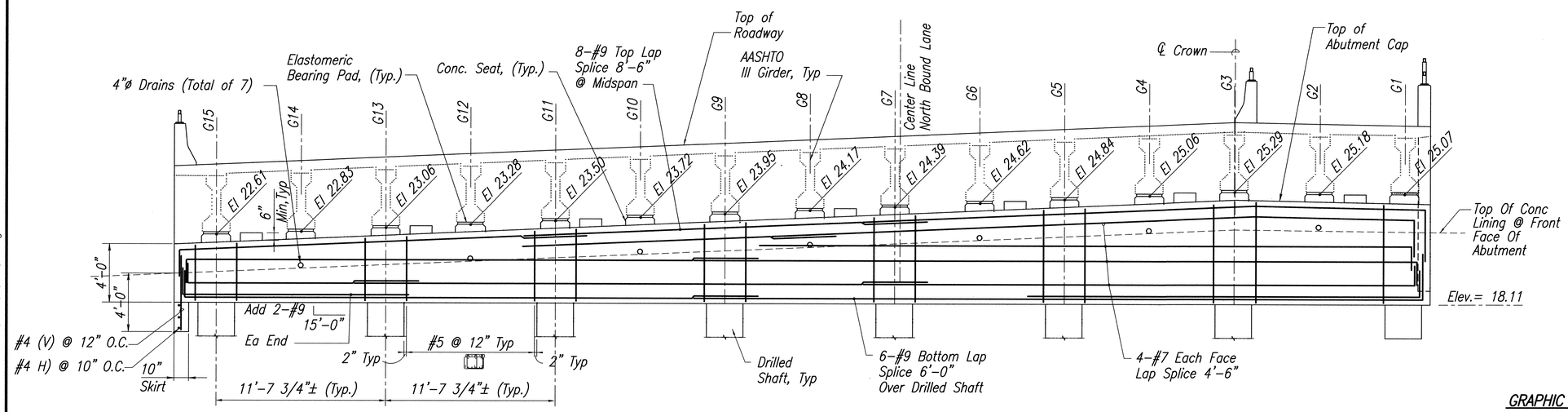

ABUTMENT No. 1 ELEVATION (B S-26 S-26)

SCALE: 1/4"= 1'-0"

GRAPHIC SCALE

5' 0' 5' 10'

SCALE: 1/4"=1'-0"

Date Plotted:Mon, 13 Feb 2006 - 10:39am
File Name:S:\m99011\Astructs-26.dwg

ORIGINAL PLAN	SURVEY PLOTTED BY	DATE
	DRAWN BY	
	TRACED BY	
NOTE BOOK	DESIGNED BY	
	QUANTITIES BY	
No.	CHECKED BY	

DEAN A. DOI LICENSED PROFESSIONAL ENGINEER No. 5580-S HAWAII, U.S.A.

Exp: April 30, 2006

SATO & ASSOCIATES, INC.

THIS WORK WAS PREPARED BY ME OR UNDER MY SUPERVISION

STATE OF HAWAII
DEPARTMENT OF TRANSPORTATION
HIGHWAYS DIVISION

WAIAKOA-UKA BRIDGE

ABUTMENT No. 1 PLAN ELEVATION

MOKULELE HIGHWAY WIDENING
Vicinity of Kealia Pond Driveway
to
Piilani Highway

Federal-Aid Project No. NH-A311 (4)
Scale: as Shown Date: July 2005

SHEET No. S - 26 OF 35 SHEETS

FED. ROAD DIST. NO.	STATE	FED. AID PROJ. NO.	FISCAL YEAR	SHEET NO.	TOTAL SHEETS
HAWAII	HAW.	NH-A311(4)	2006	157	180

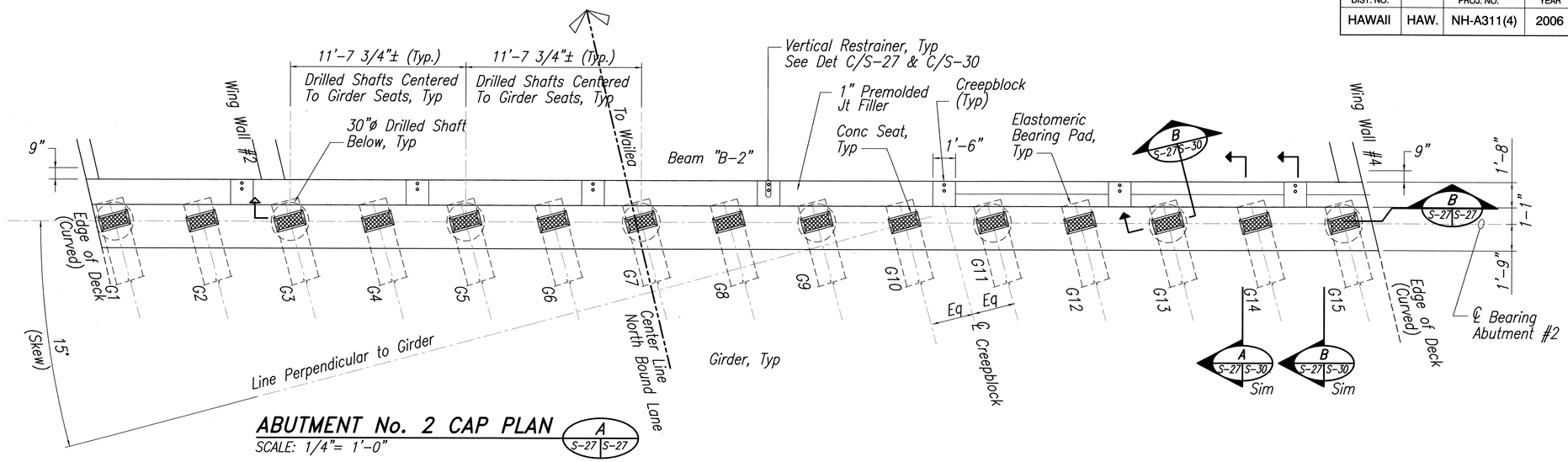

ABUTMENT No. 2 CAP PLAN (A S-27 S-27)

SCALE: 1/4"= 1'-0"

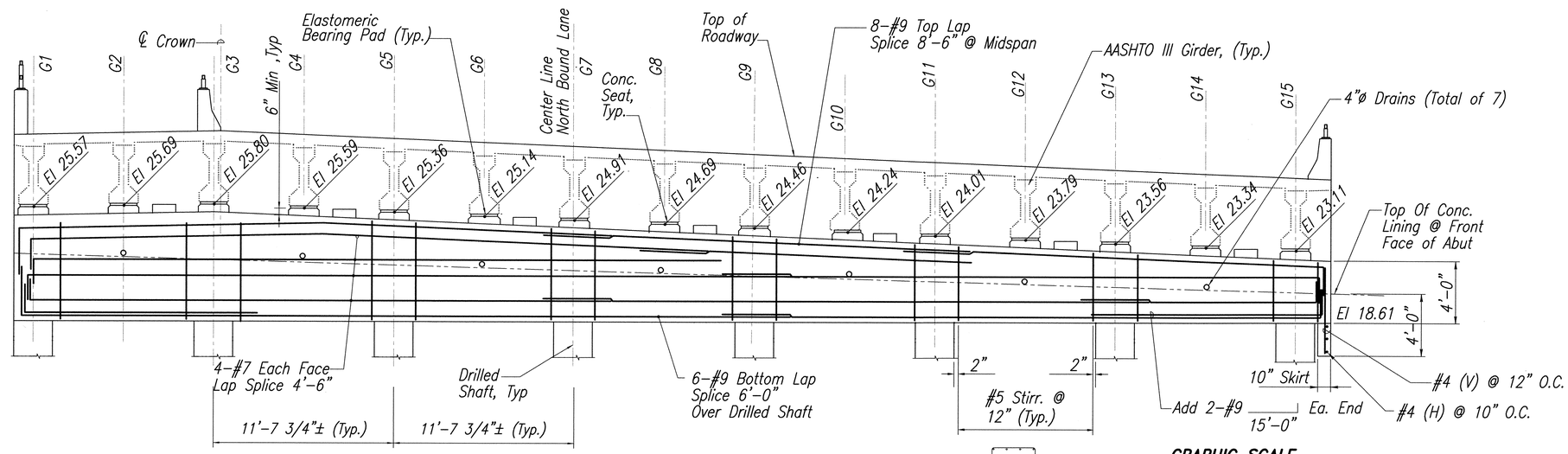

ABUTMENT No. 2 ELEVATION (B S-27 S-27)

SCALE: 1/4"= 1'-0"

GRAPHIC SCALE

5' 0' 5' 10'

SCALE: 1/4"=1'-0"

Date Plotted:Mon, 13 Feb 2006 - 10:44am
File Name:S:\m99011\Astructs-27.dwg

ORIGINAL PLAN		DATE
	SURVEY PLOTTED BY	
	DRAWN BY	
NOTE BOOK	TRACED BY	
	DESIGNED BY	
No.	QUANTITIES BY	
	CHECKED BY	

DEAN A. DOI
LICENSED PROFESSIONAL ENGINEER
No. 5580-S
HAWAII, U.S.A.

Exp: April 30, 2006

SATO & ASSOCIATES, INC.

THIS WORK WAS PREPARED BY ME OR UNDER MY SUPERVISION

STATE OF HAWAII
DEPARTMENT OF TRANSPORTATION
HIGHWAYS DIVISION

WAIAKOA-UKA BRIDGE

ABUTMENT No. 2-PLAN AND ELEVATION

MOKULELE HIGHWAY WIDENING
Vicinity of Kealia Pond Driveway
to
Piilani Highway

Federal-Aid Project No. NH-A311 (4)
Scale: as Shown Date: July 2005

SHEET No. S - 27 OF 35 SHEETS

FED. ROAD DIST. NO.	STATE	FED. AID PROJ. NO.	FISCAL YEAR	SHEET NO.	TOTAL SHEETS
HAWAII	HAW.	NH-A311(4)	2006	158	180

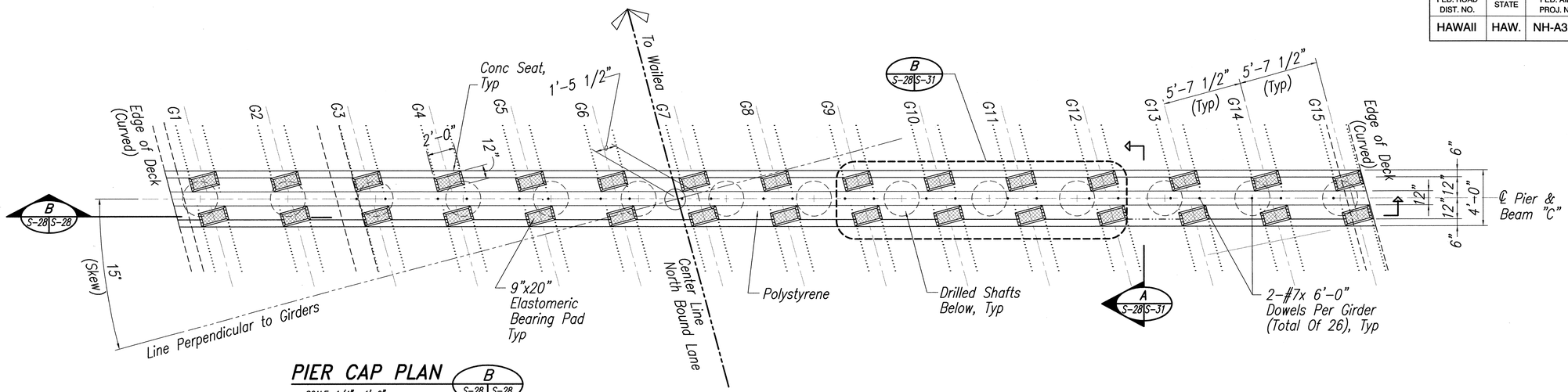

PIER CAP PLAN (B S-28 | S-28)

SCALE: 1/4"= 1'-0"

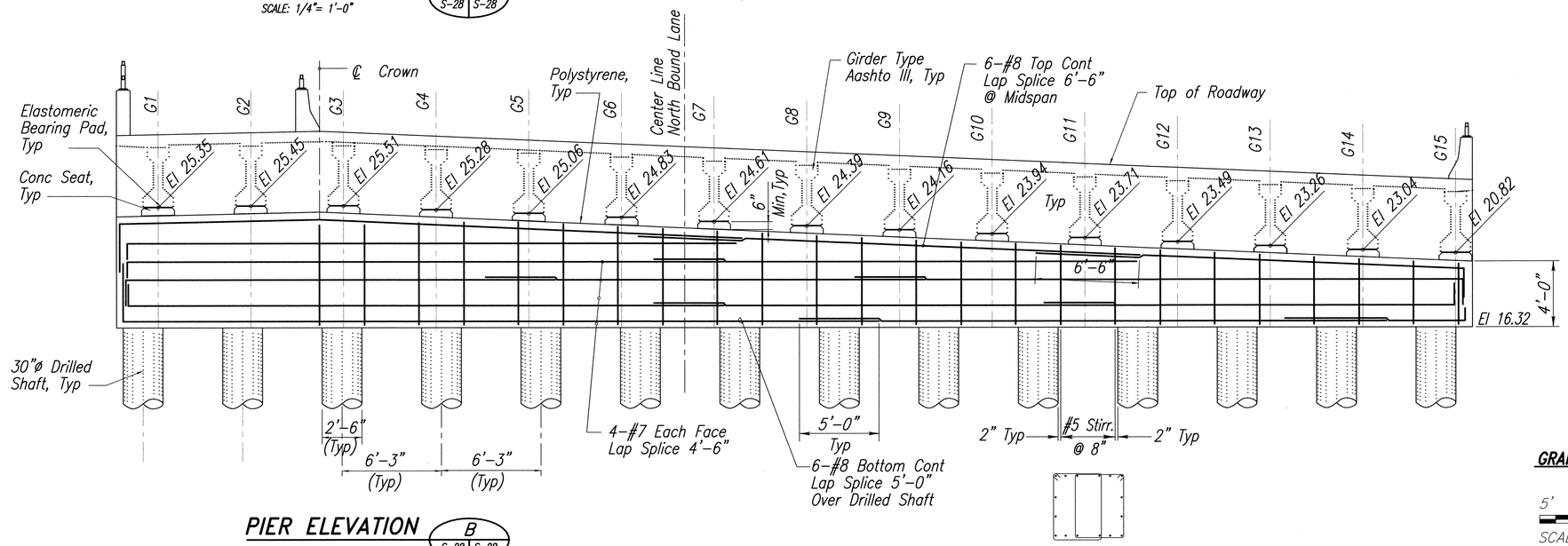

PIER ELEVATION (B S-28 | S-28)

SCALE: 1/4"= 1'-0"

GRAPHIC SCALE

5' 0' 5' 10'

SCALE: 1/4"=1'-0"

Date Plotted:Mon, 13 Feb 2006 - 10:46am
File Name:S:\m9901\1A\structs-28.dwg

ORIGINAL PLAN	SURVEY PLOTTED BY	DATE
	DRAWN BY	
NOTE BOOK	TRACED BY	
	DESIGNED BY	
	QUANTITIES BY	
No.	CHECKED BY	

DEAN A. DOI
LICENSED PROFESSIONAL ENGINEER
No. 5580-S
HAWAII, U.S.A.
Exp: April 30, 2006

SATO & ASSOCIATES, INC.

THIS WORK WAS PREPARED BY ME OR UNDER MY SUPERVISION

STATE OF HAWAII
DEPARTMENT OF TRANSPORTATION
HIGHWAYS DIVISION

WAIAKOA-UKA BRIDGE
PIER PLAN AND ELEVATION
MOKULELE HIGHWAY WIDENING
Vicinity of Kealia Pond Driveway
to
Piilani Highway
Federal-Aid Project No. NH-A311 (4)
Scale: as Shown Date: July 2005

SHEET No. S - 28 OF 35 SHEETS

FED. ROAD DIST. NO.	STATE	FED. AID PROJ. NO.	FISCAL YEAR	SHEET NO.	TOTAL SHEETS
HAWAII	HAW.	NH-A311(4)	2006	159	180

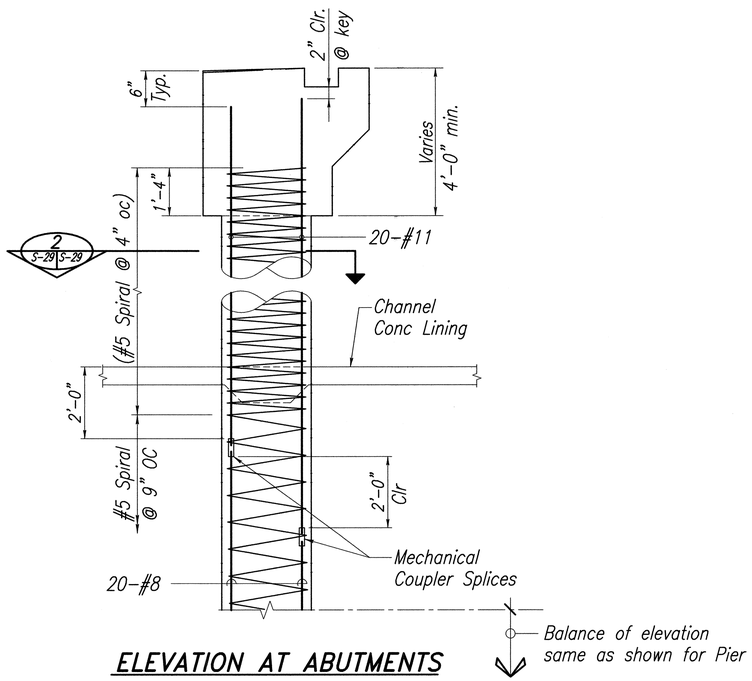

ELEVATION AT ABUTMENTS

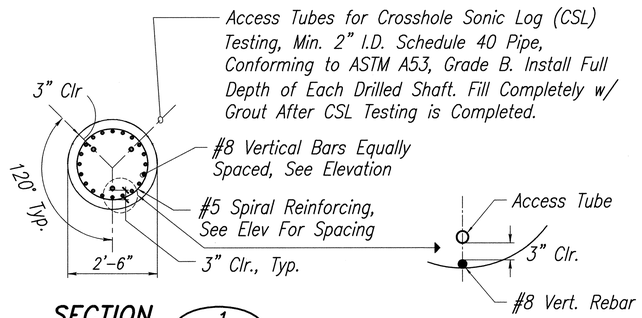

SECTION 1 (S-29 | S-29)

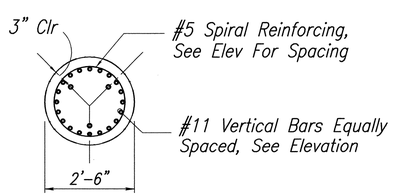

SECTION 2 (S-29 | S-29)

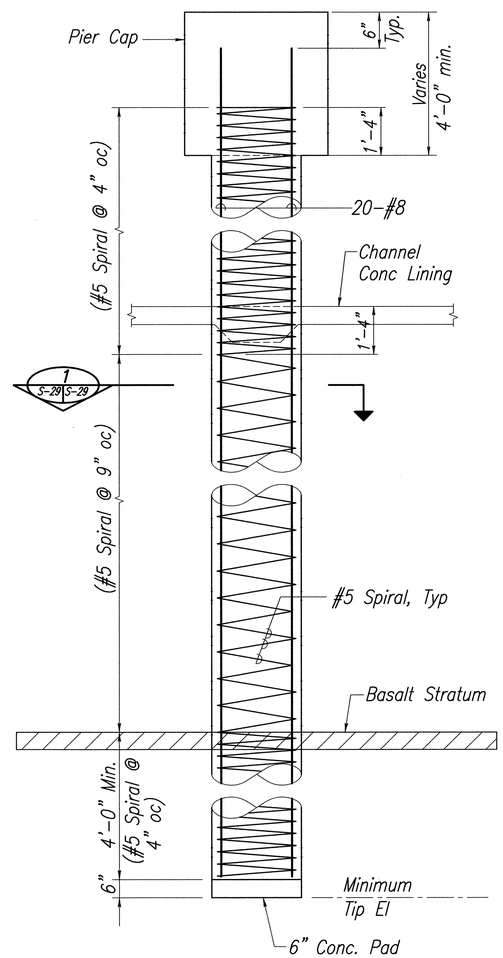

ELEVATION AT PIER

TYPICAL DRILLED SHAFT DETAILS

Not to Scale

DRILLED SHAFT NOTES:

1. The Contractor Shall Refer To The Technical Provisions – Part II, Section 511 "DRILLED SHAFTS".
2. All Excavation And Drilling Operations For Foundations Shall Be Monitored By A Soils Engineer Hired By The Contractor To Determine That The Actual Subsurface Conditions Are Consistent With The Design Recommendations Contained In The Geotechnical Report For This Project (Refer To Sheet S-1)
3. Drilled Shaft Tip Elevations Shown On The Plan, Which Are Based On A Minimum Embedment Of 4 Ft. Into The Existing Hard Basalt Formation, Could Change Due To Varying Subsurface Conditions. The Actual Drilled Shaft Tip Elevations Will Be Recommended By The Contractor's Soils Engineer And Reviewed / Approved By The Project Soils Engineer, Ernest K. Hirata And Associates.
4. Hard Drilling Shall Be Anticipated Due To The Presence Of Alluvium At The Site. Contractor Shall Be Prepared To Excavate Into Hard Boulders, Cobbles And The Basalt Formation. Temporary Casing May Be Needed To Reduce The Potential For Caving Of The Holes. The Use Of Permanent Casings Is Not Allowed.
5. Drilling Shall Not Be Performed By Method Utilizing Drilling Fluids.
6. Shafts Within Three Diameters of An Adjacent Shaft Shall Not Be Drilled Within 8 Hours of Completion of Concreting of The Adjacent Shaft.
7. Concrete For Drilled Shaft Shall Have A Minimum Compressive Strength Of 4000 Psi At 28 Days Of Age. And Shall Be Placed Within 24 Hours After Drilling To Reduce The Potential For Caving Of The Holes.
8. Concrete Shall Not Be Placed Without The Approval Of The Engineer.
9. Longitudinal Bars Shall Not Be Lap Spliced. Splices, if Required, Shall Be Mechanical Splices Capable of Developing In Tension And Compression At Least 125 Percent Of The Specified Yield Strength Of The Smaller Bar Connected.
10. Minimum Lap Length For Spiral Lateral Reinforcement Shall Be 30 Inches.
11. Concrete Spacer Blocks Shall Be Used To Maintain Proper Position & Clearance to The Reinforcing Bars.
12. Drilled Shaft Load Capacities (Based On 4 Ft Min. Embedment Into Hard Basalt):

A. Bearing Capacity
- –Strength Limit State.....368 Kips
- –Extreme Event Limit Stute.....566 Kips

B. Lateral Capacity (Extreme Event Limit State)

At Pier	At Abutments	Condition
26 Kips	30 Kips	Free Headed (Longitudinal Direction)
69 Kips	128 Kips	Fix Headed (Transverse Direction)

DEAN A. DOI
LICENSED PROFESSIONAL ENGINEER
No. 5580-S
HAWAII, U.S.A.
Exp: April 30, 2006
SATO & ASSOCIATES, INC.
THIS WORK WAS PREPARED BY ME OR UNDER MY SUPERVISION

STATE OF HAWAII
DEPARTMENT OF TRANSPORTATION
HIGHWAYS DIVISION
WAIAKOA–UKA BRIDGE
DRILLED SHAFT DETAILS
MOKULELE HIGHWAY WIDENING
Vicinity of Kealia Pond Driveway to Piilani Highway
Federal–Aid Project No. NH–A311 (4)
Scale: as Shown Date: July 2005
SHEET No. S - 29 OF 35 SHEETS

ORIGINAL PLAN | NOTE BOOK No. ____
SURVEY PLOTTED BY ____ DATE
DRAWN BY "
TRACED BY "
DESIGNED BY "
QUANTITIES BY "
CHECKED BY "

Date Plotted:Mon, 13 Feb 2006 - 10:47am
File Name:S:\m9901\1\Astructs-29.dwg

FED. ROAD DIST. NO.	STATE	FED. AID PROJ. NO.	FISCAL YEAR	SHEET NO.	TOTAL SHEETS
HAWAII	HAW.	NH-A311(4)	2006		180

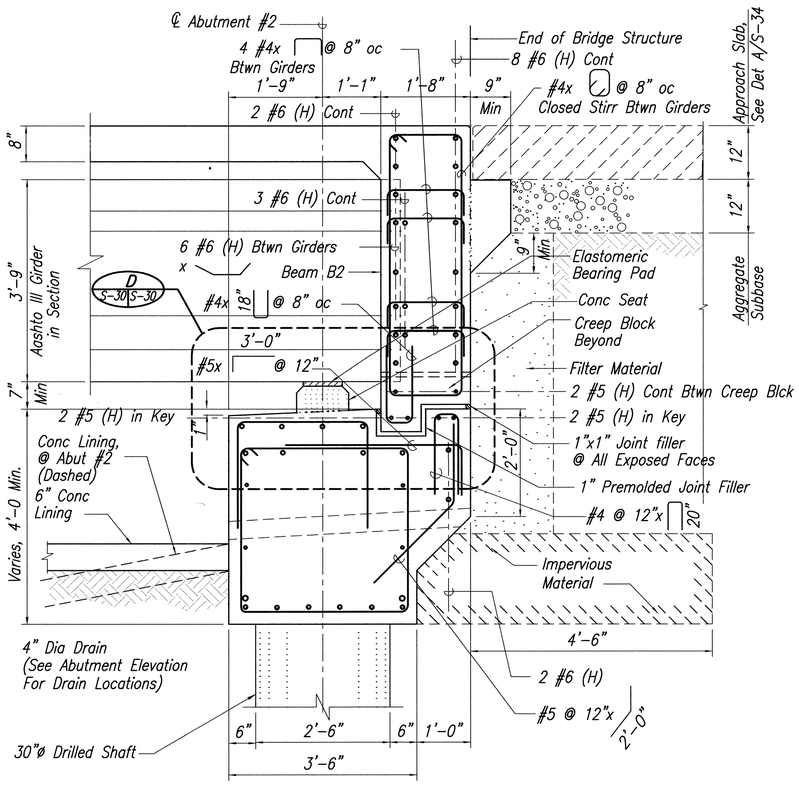

SECTION THRU CONCRETE PAD (A)

S-21 | S-30

S-27, S-26

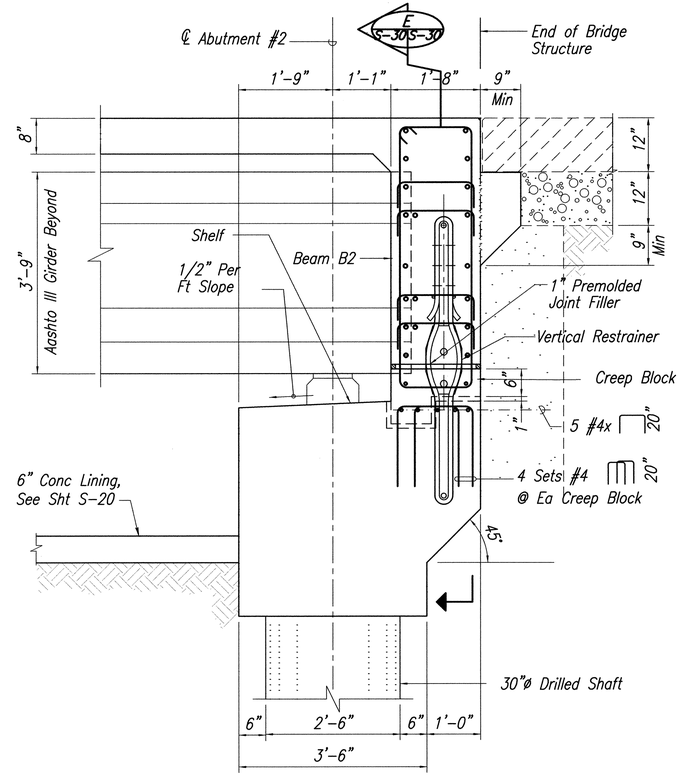

SECTION THRU CREEP BLOCK (B)

Same as Sect 'A' Except as Noted

S-26 | S-30

S-27

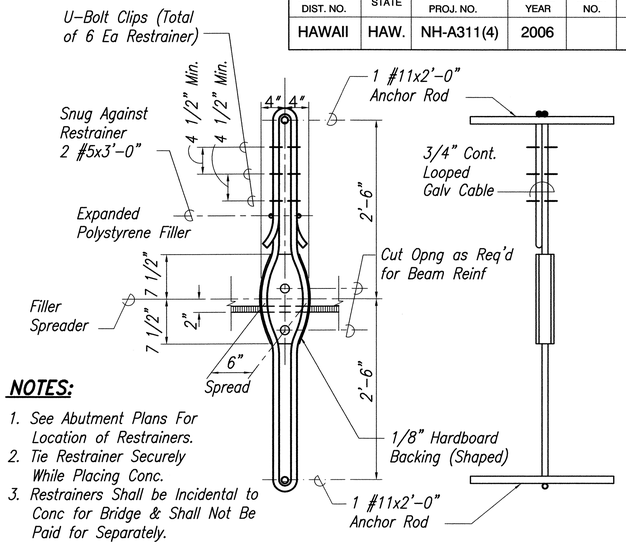

NOTES:

1. See Abutment Plans For Location of Restrainers.
2. Tie Restrainer Securely While Placing Conc.
3. Restrainers Shall be Incidental to Conc for Bridge & Shall Not Be Paid for Separately.

VERTICAL RESTRAINER DETAILS (C)

SCALE: 1"= 1'-0"

S-26 | S-30

S-27

BEARING PAD NOTES:

1. Bottom of Bearing Pad Shall be Secured to the Concrete Seats With an Adhesive Recommended by the Elastomer Manufacturor and Approved by the Engineer.
2. Top Surface of the Concrete Seat Shall Have a Steel Trowel Finish, Smooth and True to Grade. Bearing Area Deviation from Plane Shall Not Exceed 1/16 inch. The seat Shall be Constructed Higher Than Shown on the Plans and then Grounded Down to the Required Elevation.
3. All Elastomeric Bearing Pads Shall be Grade 3, 60 Durometer Hardness, Steel Reinforced, Unless Noted Otherwise.
4. Bearing Pad Shall be Incidental to Concrete for Bridge and Shall Not be Paid for Separately.

ABUTMENT #2 SECTION (ABUTMENT #1 SIMILAR OPP. HAND)

SCALE: 3/4"= 1'-0"

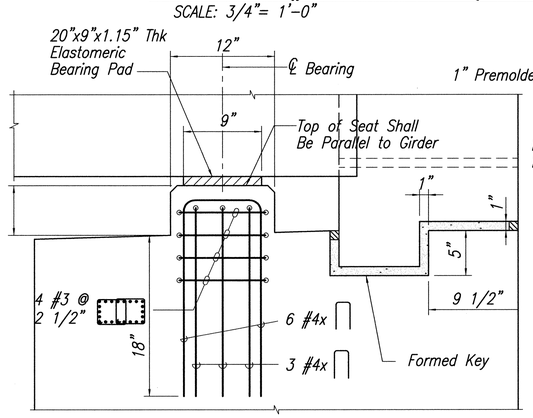

NOTE:

Concrete Seats Shall Be Poured Monolithically With The Abutment Cap.

CONCRETE PAD SECTION (D)

SCALE: 1 1/2"= 1'-0"

S-30 | S-30

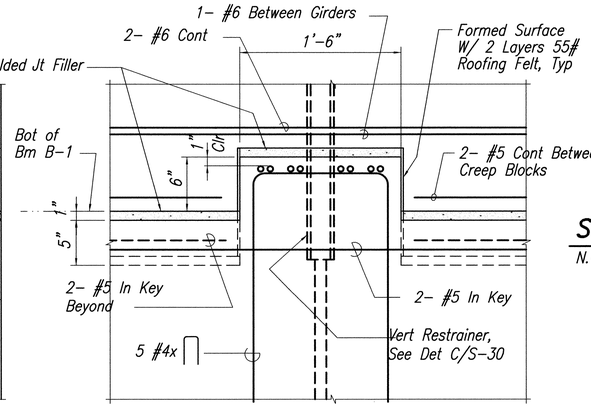

CREEP BLOCK SECTION (E)

SCALE: 1 1/2"= 1'-0"

S-30 | S-30

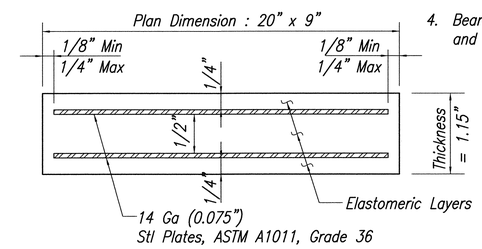

STEEL LAMINATED ELASTOMERIC BEARING PAD (F)

N.T.S.

S-26 | S-30

S-27

GRAPHIC SCALES

1' 0' 1' 2' 4'
SCALE: 3/4" = 1'- 0"

1' 6" 0' 6" 1' 2' 3'
SCALE: 1" = 1'- 0"

1' 1/2' 0' 1' 2'
SCALE: 1 1/2" = 1'- 0"

DEAN A. DOI
LICENSED PROFESSIONAL ENGINEER
No. 5580-S
HAWAII, U.S.A.
Exp: April 30, 2006

SATO & ASSOCIATES, INC.

THIS WORK WAS PREPARED BY ME OR UNDER MY SUPERVISION

STATE OF HAWAII
DEPARTMENT OF TRANSPORTATION
HIGHWAYS DIVISION

MOKULELE HIGHWAY WIDENING
Vicinity of Kealia Pond Driveway to Piilani Highway
Federal-Aid Project No. NH-A311 (4)
Scale: as Shown Date: July 2005

SHEET No. S - 30 OF 35 SHEETS

Date Plotted:Mon, 13 Feb 2006 - 11:57am
File Name:S:\m99011\Astruct\s-30.dwg

ORIGINAL PLAN | SURVEY PLOTTED BY | DRAWN BY | TRACED BY | DESIGNED BY | QUANTITIES BY | CHECKED BY | DATE | NOTE BOOK No.

FED. ROAD DIST. NO.	STATE	FED. AID PROJ. NO.	FISCAL YEAR	SHEET NO.	TOTAL SHEETS
HAWAII	HAW.	NH-A311(4)	2006	161	180

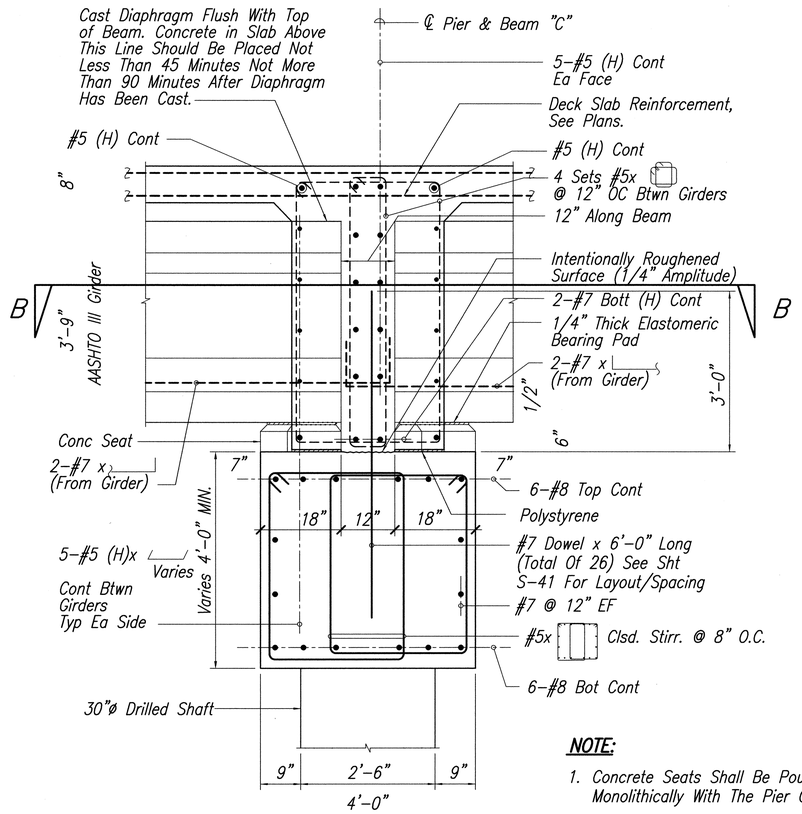

PIER SECTION

SCALE: 3/4"= 1'-0"

A S-28 S-31

NOTE:

1. Concrete Seats Shall Be Poured Monolithically With The Pier Cap.
2. For Girder Bearing Notes, See Sht. S-30.

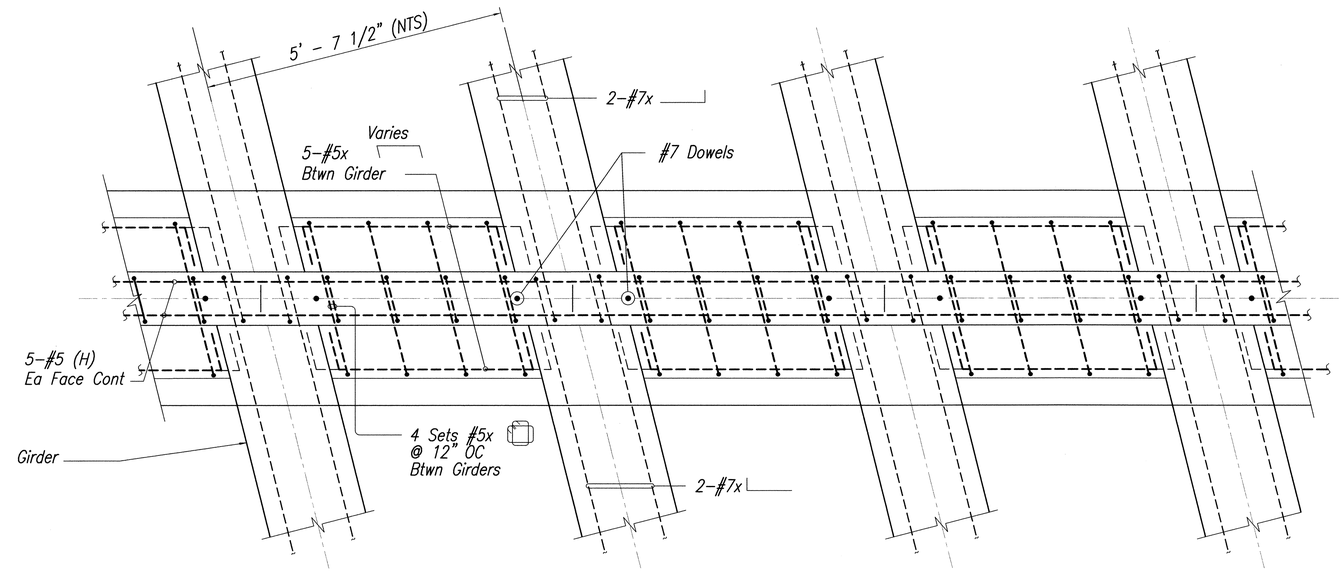

BEAM 'C' PARTIAL PLAN DETAIL

SCALE: 3/4"= 1'-0"

B S-28 S-31

S-28

GRAPHIC SCALES

1' 0' 1' 2' 4'
SCALE: 3/4" = 1'- 0"

1' 6" 0' 6" 1' 2' 3'
SCALE: 1" = 1'- 0"

1' 1/2' 0' 1' 2'
SCALE: 1 1/2" = 1'- 0"

DEAN A. DOI
LICENSED PROFESSIONAL ENGINEER
No. 5580-S
HAWAII, U.S.A.
Exp: April 30, 2006

SATO & ASSOCIATES, INC.

THIS WORK WAS PREPARED BY ME OR UNDER MY SUPERVISION

STATE OF HAWAII
DEPARTMENT OF TRANSPORTATION
HIGHWAYS DIVISION

WAIAKOA-UKA BRIDGE
BEAM "C"-PLAN AND SECTION
MOKULELE HIGHWAY WIDENING
Vicinity of Kealia Pond Driveway to Piilani Highway
Federal-Aid Project No. NH-A311 (4)
Scale: as Shown Date: July 2005

SHEET No. S-31 OF 35 SHEETS

Date Plotted:Mon, 13 Feb 2006 - 11:20am
File Name:S:\m9901\1A\structs-31.dwg

ORIGINAL PLAN
NOTE BOOK No. ____
SURVEY PLOTTED BY ____ DATE
DRAWN BY ____
TRACED BY ____
DESIGNED BY ____
QUANTITIES BY ____
CHECKED BY ____

FED. ROAD DIST. NO.	STATE	FED. AID PROJ. NO.	FISCAL YEAR	SHEET NO.	TOTAL SHEETS
HAWAII	HAW.	NH-A311(4)	2006	162	180

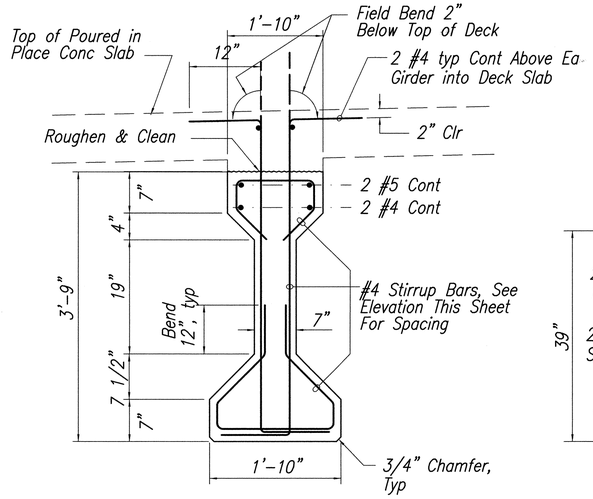

TYPICAL GIRDER SECTION (B S-32 S-32)

SCALE: 1"= 1'-0"

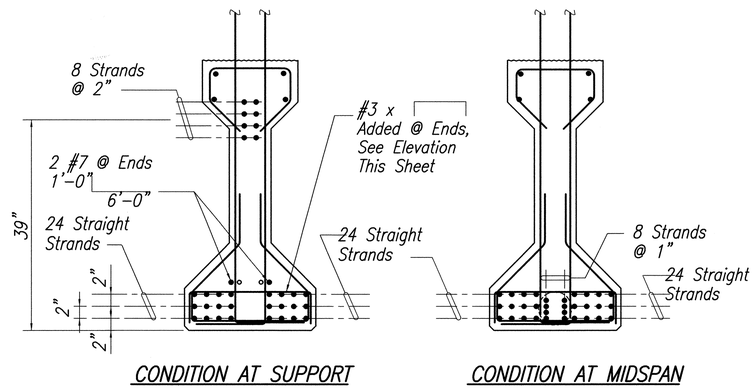

GIRDER STRAND PLACEMENT (C S-32 S-32)

SCALE: 1"= 1'-0"

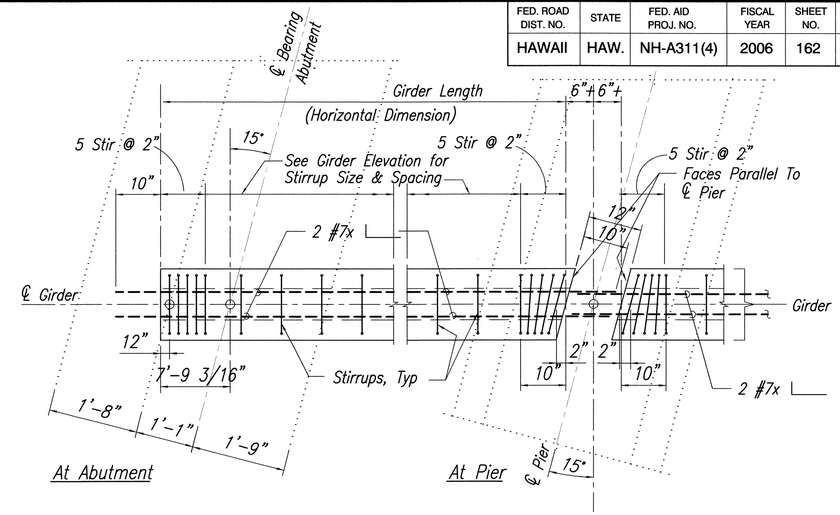

GIRDER ENDS DETAIL PLAN (D S-32 S-32)

SCALE: 3/4"= 1'-0"

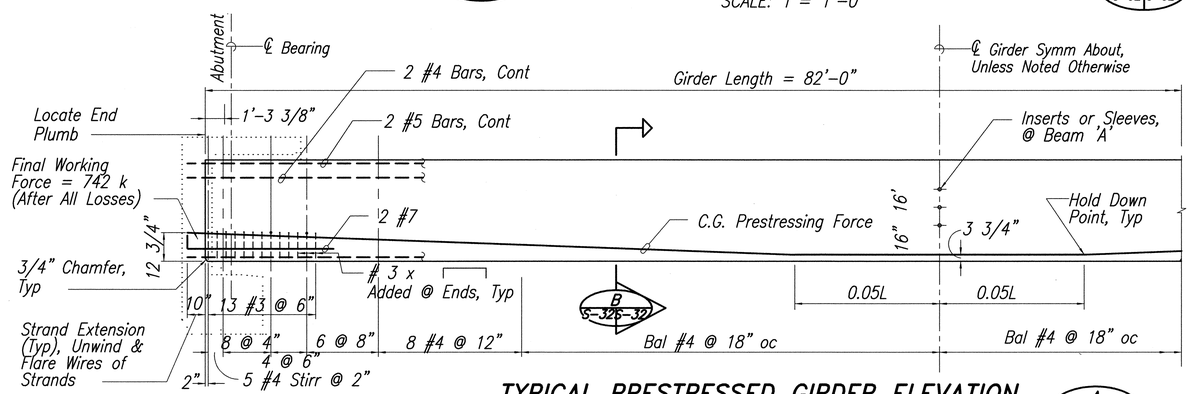

TYPICAL PRESTRESSED GIRDER ELEVATION (A S-32 S-32)

SCALE: Horizontal 1/4" = 1'-0"
Vertical 3/8" = 1'-0"

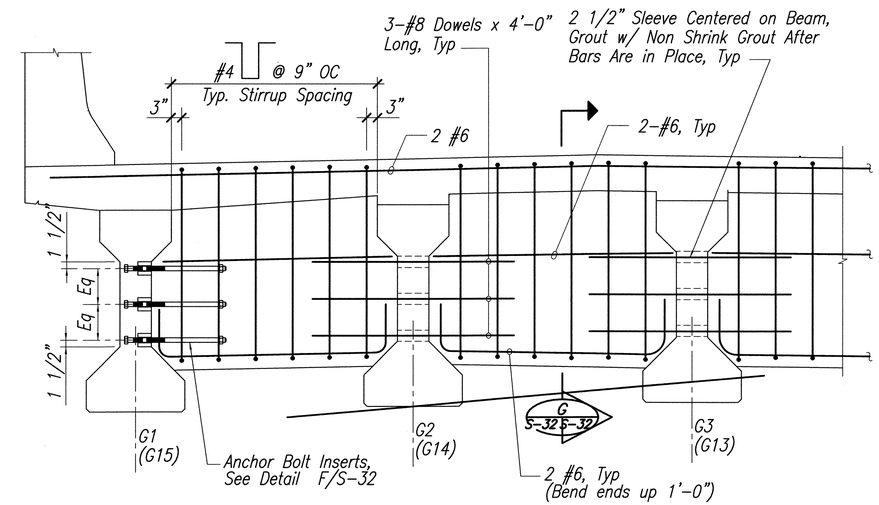

BEAM "A" ELEVATION (E S-32 S-32)

N.T.S.

NOTE:

Beams shall be poured at least Seven (7) days prior to pouring deck slab.

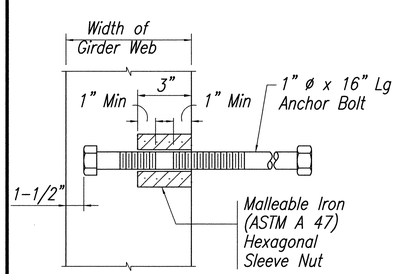

ANCHOR BOLT INSERT DETAIL (F S-32 S-32)

SCALE: 3"= 1'-0"

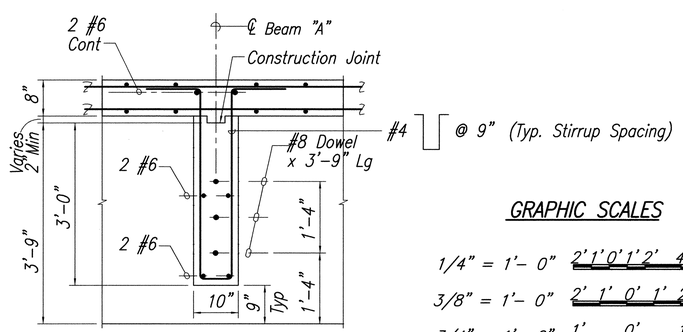

BEAM "A" SECTION (G S-32 S-32)

SCALE: 3/4"= 1'-0"

GRAPHIC SCALES

1/4" = 1'- 0" 2' 1' 0' 1' 2' 4' 8'

3/8" = 1'- 0" 2' 1' 0' 1' 2' 4' 6'

3/4" = 1'- 0" 1' 0' 1' 2' 4'

1" = 1'- 0" 1' 0' 1' 2' 4'

3" = 1'- 0" 1' 9" 6" 3" 0' 3" 6" 9"

ORIGINAL PLAN	SURVEY PLOTTED BY	DATE
	DRAWN BY	
	TRACED BY	
NOTE BOOK	DESIGNED BY	
	QUANTITIES BY	
No.	CHECKED BY	

DEAN A. DOI
LICENSED PROFESSIONAL ENGINEER
No. 5580-S
HAWAII, U.S.A.
Exp: April 30, 2006

SATO & ASSOCIATES, INC.

THIS WORK WAS PREPARED BY ME OR UNDER MY SUPERVISION

STATE OF HAWAII
DEPARTMENT OF TRANSPORTATION
HIGHWAYS DIVISION

WAIAKOA-UKA BRIDGE
GIRDER DETAILS
MOKULELE HIGHWAY WIDENING
Vicinity of Kealia Pond Driveway to Piilani Highway
Federal - Aid Project No. NH - A311 (4)

Scale: as Shown Date: July 2005

SHEET No. S-32 OF 35 SHEETS

FED. ROAD DIST. NO.	STATE	FED. AID PROJ. NO.	FISCAL YEAR	SHEET NO.	TOTAL SHEETS
HAWAII	HAW.	NH-A311(4)	2006	163	180

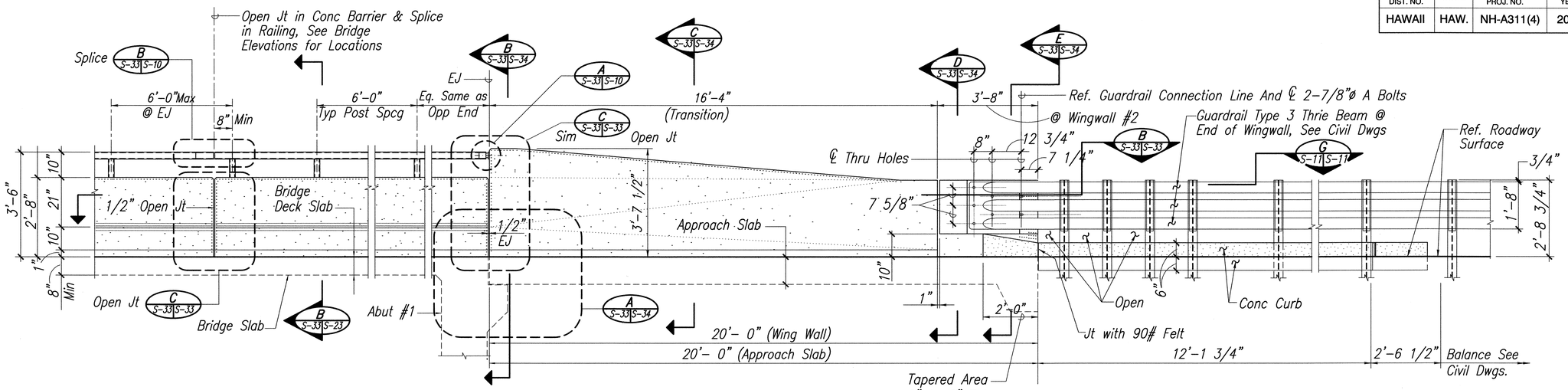

CONCRETE TRAFFIC / PEDESTRIAN RAIL-ELEVATION (A S-21 S-33)

SCALE: 1/2" = 1'-0"

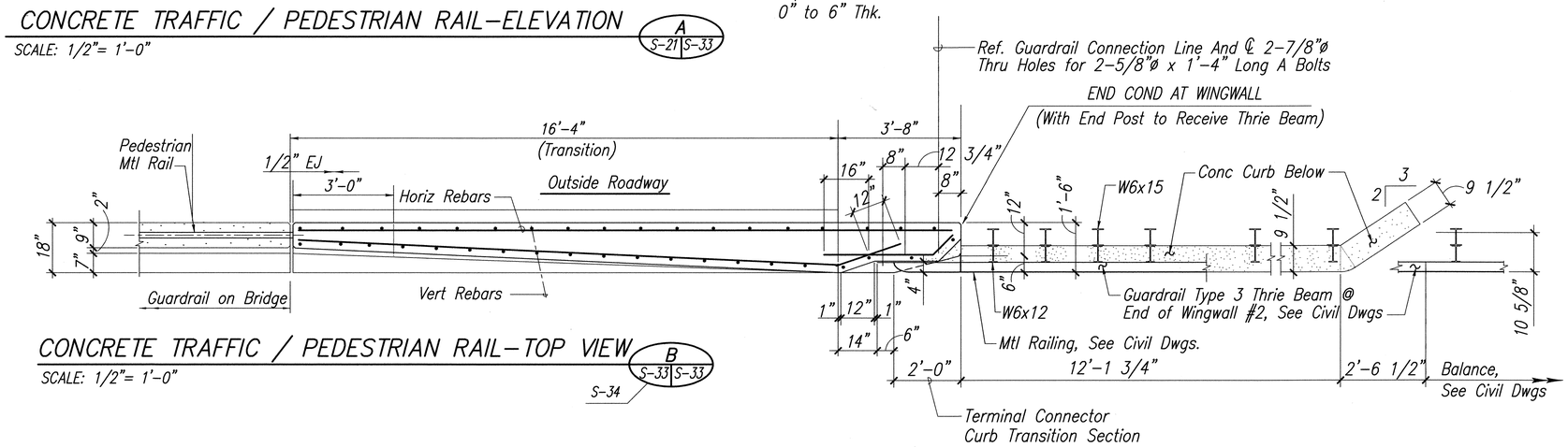

CONCRETE TRAFFIC / PEDESTRIAN RAIL-TOP VIEW (B S-33 S-33)

SCALE: 1/2" = 1'-0"

S-34

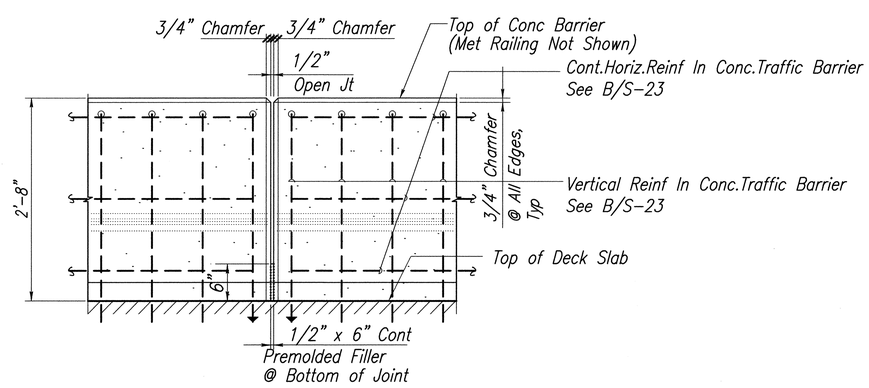

OPEN JOINT DETAIL (C S-33 S-33)

SCALE: 1" = 1'-0"

GRAPHIC SCALES

2' 1' 0' 1' 2' 4' 8'

SCALE: 1/2" = 1'-0"

DEAN A. DOI LICENSED PROFESSIONAL ENGINEER No. 5580-S HAWAII, U.S.A.

Exp: April 30, 2006

SATO & ASSOCIATES, INC.

THIS WORK WAS PREPARED BY ME OR UNDER MY SUPERVISION

STATE OF HAWAII
DEPARTMENT OF TRANSPORTATION
HIGHWAYS DIVISION

WAIAKOA-UKA BRIDGE
WING WALL DETAILS
MOKULELE HIGHWAY WIDENING
Vicinity of Kealia Pond Driveway to Piilani Highway
Federal-Aid Project No. NH-A311 (4)
Scale: as Shown Date: July 2005

SHEET No. S-33 OF 35 SHEETS

ORIGINAL PLAN	SURVEY PLOTTED BY	DATE
	DRAWN BY	"
	TRACED BY	"
NOTE BOOK	DESIGNED BY	"
	QUANTITIES BY	"
No.	CHECKED BY	"

Date Plotted:Mon, 13 Feb 2006 - 11:32am
File Name:S:\m9901\Astructs-33.dwg

FED. ROAD DIST. NO.	STATE	FED. AID PROJ. NO.	FISCAL YEAR	SHEET NO.	TOTAL SHEETS
HAWAII	HAW.	NH-A311(4)	2006	164	180

WING WALL SCHEDULE

Desgn 'H'	3'	4'	6'	8'	10'	12'	14'
'F'	1'-0"	1'-0"	1'-0"	1'-2"	1'-2"	1'-2"	1'-2"
'W'	9'-6"	9'-6"	9'-6"	9'-6"	9'-6"	9'-6"	9'-6"
'T'	——	——	——	——	——	1'-0"	1'-6"
'a' Bars	#5@10	#5@10	#5@10	#6@10	#6@10	#5@10	#7@10
'b' Bars	——	——	——	——	——	#5@10	#5@10
'c' Bars	#5@10	#6@10	#7@10	#8@10	#6@10	#7@10	#7@10
'd' Bars	——	——	——	——	#5@10	#6@10	#7@10

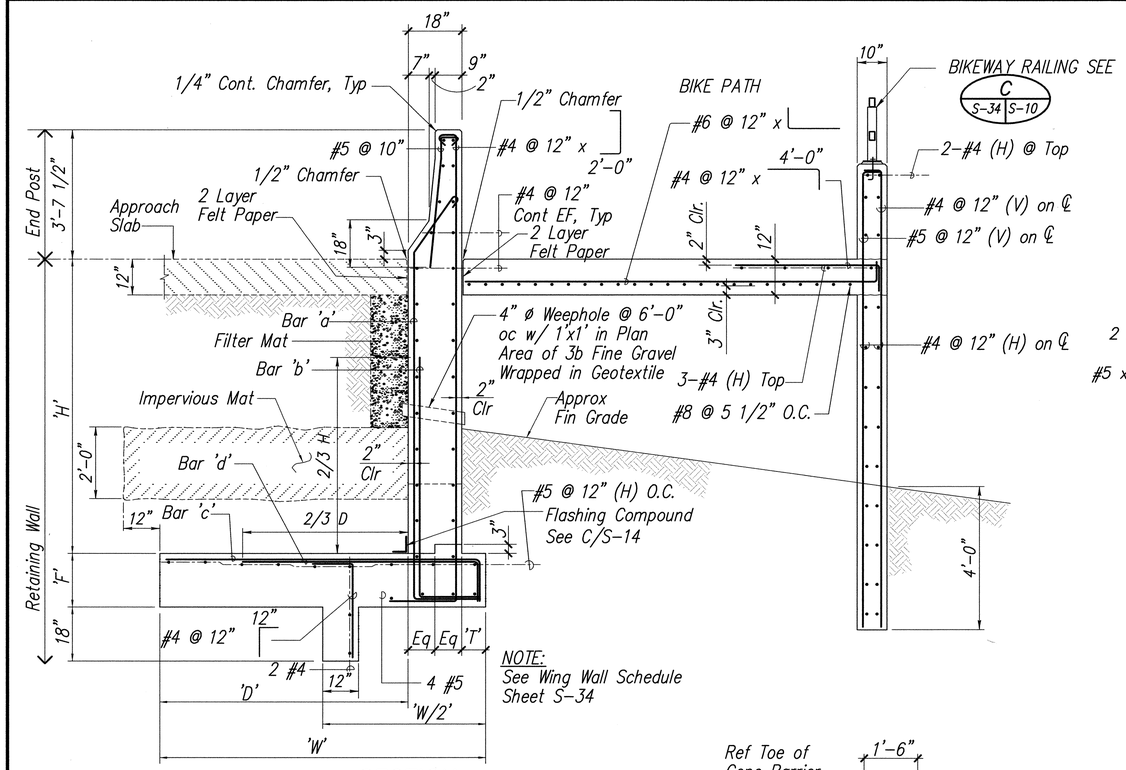

SECTION B
SCALE: 1/2"= 1'-0"
S-19 S-34
S-33, S-34

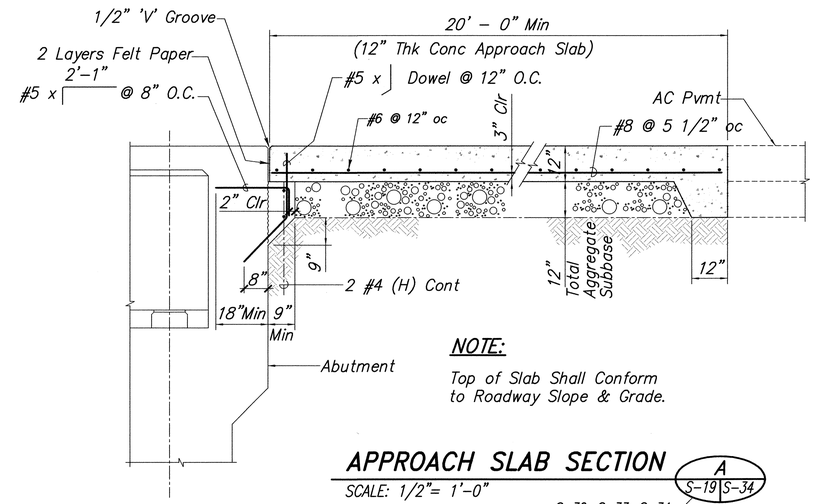

NOTE:
Top of Slab Shall Conform to Roadway Slope & Grade.

APPROACH SLAB SECTION A
SCALE: 1/2"= 1'-0"
S-19 S-34
S-30, S-33, S-34

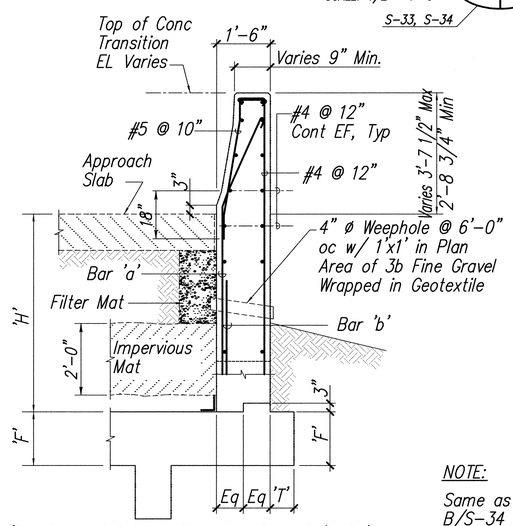

(For Cont of Reinf & Ftg., See Sect. B/S-34)

SECTION C
SCALE: 1/2"= 1'-0"
S-33 S-34
S-34

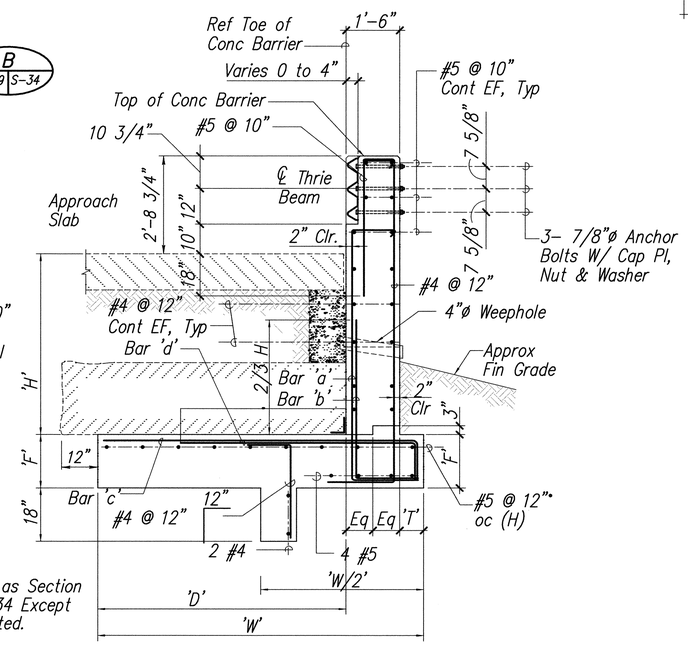

NOTE:
Same as Section B/S-34 Except as Noted.

SECTION D
SCALE: 1/2"= 1'-0"
S-33 S-34
S-34

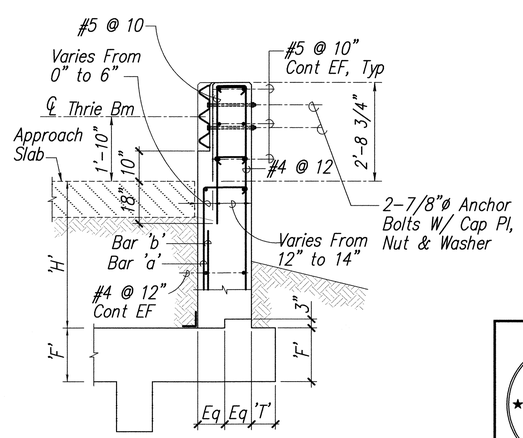

(For Cont. of Reinf & Ftg., See Sect. D/S-34)

SECTION E
SCALE: 1/2"= 1'-0"
S-33 S-34
S-34

GRAPHIC SCALES

2' 1' 0' 1' 2' 4' 8'
SCALE: 1/2" = 1'- 0"

1' 6" 0' 6" 1' 2' 3'
SCALE: 1" = 1'- 0"

DEAN A. DOI
LICENSED PROFESSIONAL ENGINEER
No. 5580-S
HAWAII, U.S.A.
Exp: April 30, 2006
SATO & ASSOCIATES, INC.
THIS WORK WAS PREPARED BY ME OR UNDER MY SUPERVISION

STATE OF HAWAII
DEPARTMENT OF TRANSPORTATION
HIGHWAYS DIVISION
WAIAKOA–UKA BRIDGE
WING WALL SECTIONS & SCHEDULE
MOKULELE HIGHWAY WIDENING
Vicinity of Kealia Pond Driveway to Piilani Highway
Federal–Aid Project No. NH–A311 (4)
Scale: as Shown Date: July 2005
SHEET No. S-34 OF 35 SHEETS

Date Plotted:Mon, 13 Feb 2006 - 11:34am
File Name:S:\m9901\1\Astructs-34.dwg

ORIGINAL PLAN	SURVEY PLOTTED BY	DATE
	DRAWN BY "	
NOTE BOOK	TRACED BY "	
	DESIGNED BY "	
	QUANTITIES BY "	
No.	CHECKED BY "	

FED. ROAD DIST. NO.	STATE	FED. AID PROJ. NO.	FISCAL YEAR	SHEET NO.	TOTAL SHEETS
HAWAII	HAW.	NH-A311(4)	2006	165	180

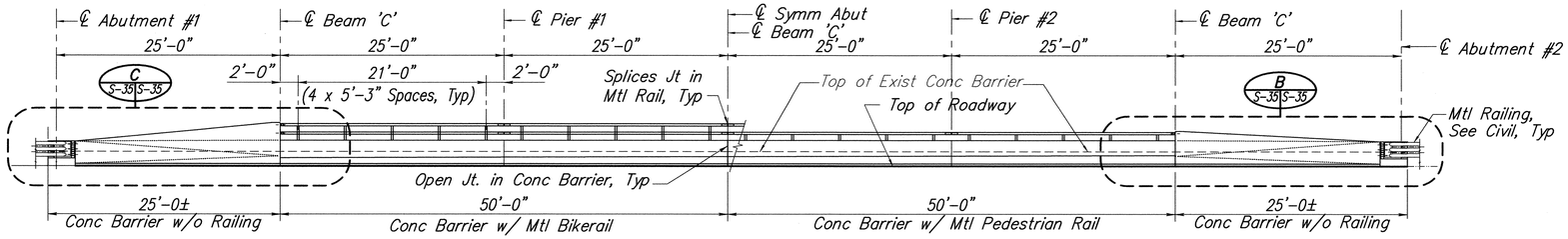

1–DOWNSTREAM PARTIAL ELEVATION

2– UPSTREAM PARTIAL ELEVATION

EXISTING WAIAKOA BRIDGE INTERIOR ELEVATIONS

SCALE: 1/8"= 1'-0"

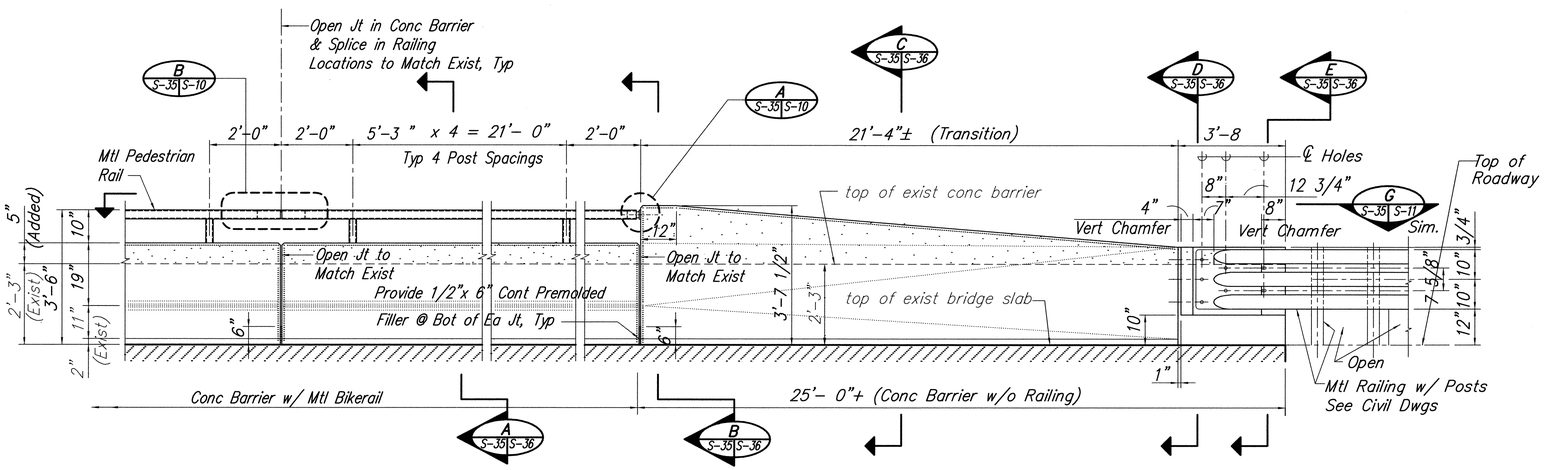

RETROFITTED CONC. BARRIER WITH METAL PEDESTRIAN RAIL

SCALE: 1/2"= 1'-0" (INSIDE ELEVATION)

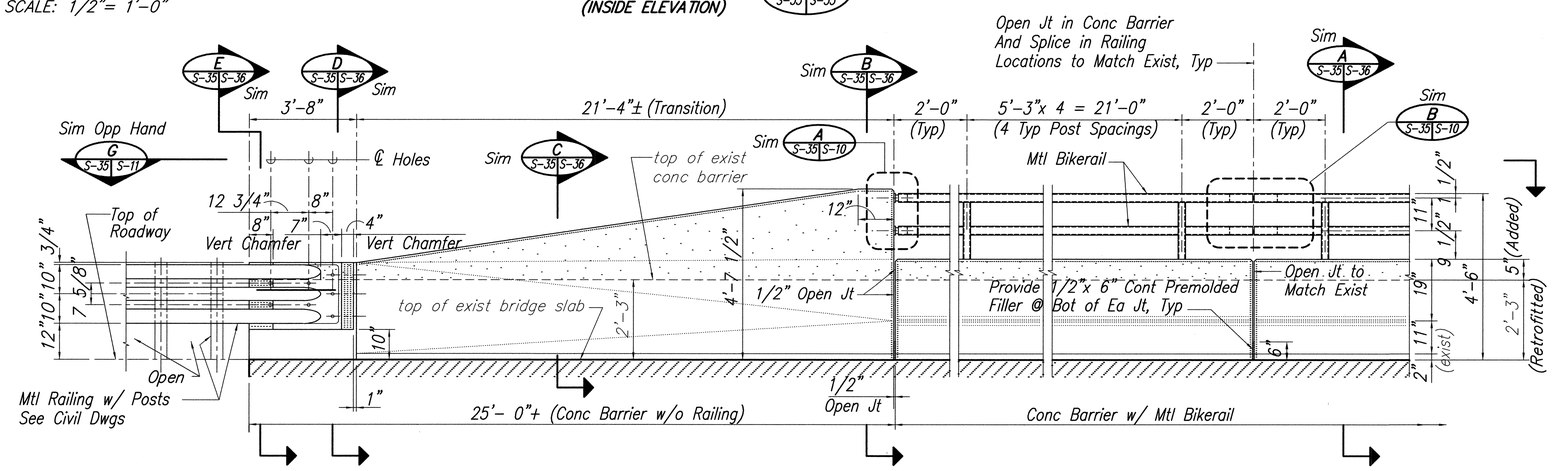

RETROFITTED CONC. BARRIER WITH METAL BIKE RAIL

SCALE: 1/2"= 1'-0" (INSIDE ELEVATION)

GRAPHIC SCALES

4' 2' 0' 2' 4' 8' 12' 16' 20'

SCALE: 1/8" = 1'- 0"

2' 1' 0' 1' 2' 4' 8'

SCALE: 1/2" = 1'- 0"

Date Plotted:Mon, 13 Feb 2006 - 11:35am
File Name:S:\m990\1\Astruct\s-35.dwg

ORIGINAL PLAN	SURVEY PLOTTED BY	DATE
	DRAWN BY	
NOTE BOOK	TRACED BY	
	DESIGNED BY	
	QUANTITIES BY	
No.	CHECKED BY	

DEAN A. DOI
LICENSED PROFESSIONAL ENGINEER
No. 5580-S
HAWAII, U.S.A.
Exp: April 30, 2006

SATO & ASSOCIATES, INC.

THIS WORK WAS PREPARED BY ME OR UNDER MY SUPERVISION

STATE OF HAWAII
DEPARTMENT OF TRANSPORTATION
HIGHWAYS DIVISION

EXISTING WAIAKOA BRIDGE
RAILING RETROFIT

MOKULELE HIGHWAY WIDENING
Vicinity of Kealia Pond Driveway
to
Piilani Highway

Federal–Aid Project No. NH–A311 (4)
Scale: as Shown Date: July 2005

SHEET No. S - 35 OF 35 SHEETS

FED. ROAD DIST. NO.	STATE	FED. AID PROJ. NO.	FISCAL YEAR	SHEET NO.	TOTAL SHEETS
HAWAII	HAW.	NH-A311(4)	2006	166	180

LEGEND:

- exist rebars (light)
- New Rebars (Dark)
- 1'-7" exist dim (light)
- 1'-7" New Dim (Dark)
- exist conc (unfilled)
- New Conc (Hatched)
- (E) existing

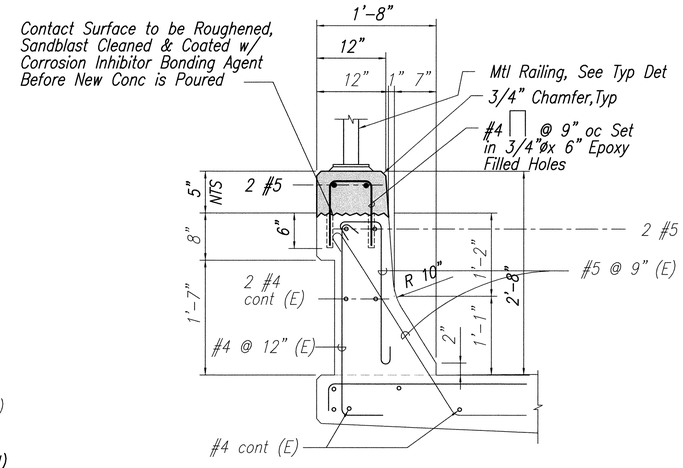

BRIDGE CONCRETE GUARDRAIL RETROFITTED DETAIL (A)

SCALE: 1"= 1'-0"

S-35 | S-36

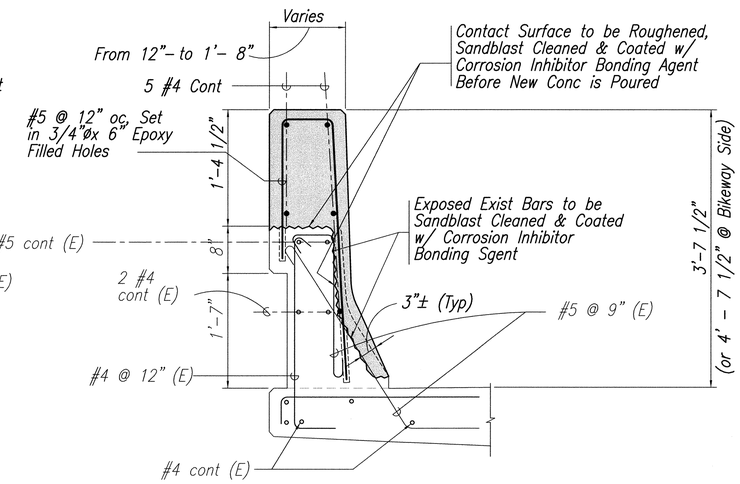

BRIDGE CONCRETE BARRIER RETROFITTED DETAIL (B)

SCALE: 1"= 1'-0"

S-35 | S-36

NOTE:

1. Corrosion Inhibitor/Bonding Agent Shall Be Water-Based Epoxy Resin/ Portland Cement Bonding Agent With a 24 Hour Open Time.
2. New Concrete Shall Comply With Strength And Admixture Requirements Given In Sheet S-1

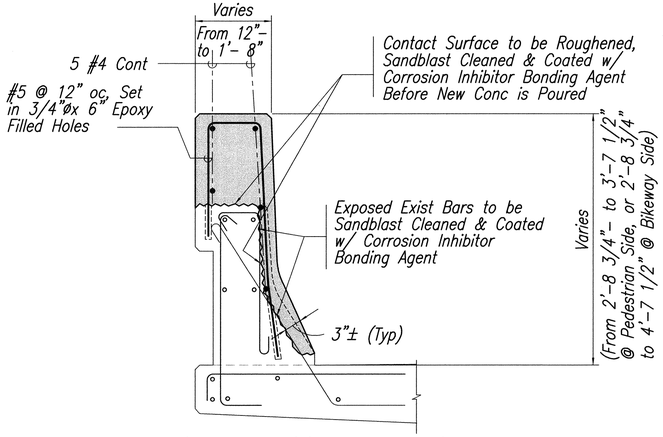

(Same as Det 'B' Except as Noted)

BRIDGE CONCRETE BARRIER RETROFITTED DETAIL (C)

SCALE: 1"= 1'-0"

S-35 | S-36

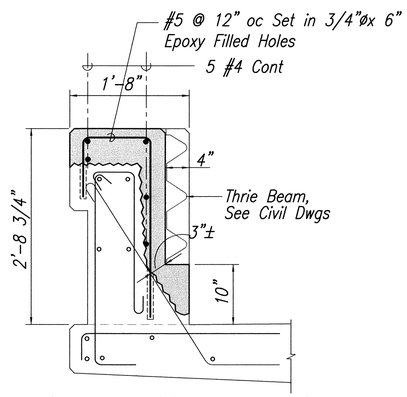

(Same as Det 'B' Except as Noted)

BRIDGE CONCRETE BARRIER RETROFITTED DETAIL (D)

SCALE: 1"= 1'-0"

S-35 | S-36

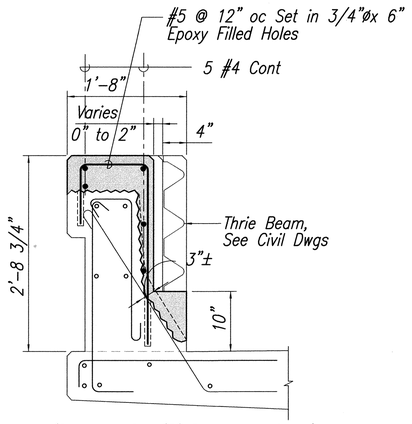

(Same as Det 'B' Except as Noted)

BRIDGE CONCRETE BARRIER RETROFITTED DETAIL (E)

SCALE: 1"= 1'-0"

S-35 | S-36

GRAPHIC SCALES

1' 0' 1' 2' 3' 4' 5'
SCALE: 3/4" = 1'- 0"

1' 6" 0' 6" 1' 2' 4'
SCALE: 1" = 1'- 0"

DEAN A. DOI LICENSED PROFESSIONAL ENGINEER No. 5580-S HAWAII, U.S.A.
Exp: April 30, 2006
SATO & ASSOCIATES, INC.
THIS WORK WAS PREPARED BY ME OR UNDER MY SUPERVISION

STATE OF HAWAII
DEPARTMENT OF TRANSPORTATION
HIGHWAYS DIVISION

EXISTING WAIAKOA-UKA BRIDGE RETROFIT

MOKULELE HIGHWAY WIDENING
Vicinity of Kealia Pond Driveway
to
Piilani Highway

Federal-Aid Project No. NH-A311 (4)
Scale: as Shown Date: July 2005

SHEET No. S - 36 OF 35 SHEETS

ORIGINAL PLAN | SURVEY PLOTTED BY | DRAWN BY | TRACED BY | DESIGNED BY | QUANTITIES BY | CHECKED BY | DATE
NOTE BOOK No.

Date Plotted:Mon, 13 Feb 2006 - 11:38am
File Name:S:\m9901\1A\structs-36.dwg