FED. ROAD DIST. NO.	STATE	FEDERAL – AID PROJ. NO.	FISCAL YEAR	SHEET NO.	TOTAL SHEETS
HAWAII	HAW.	NH–A311(3)	2002	158	159

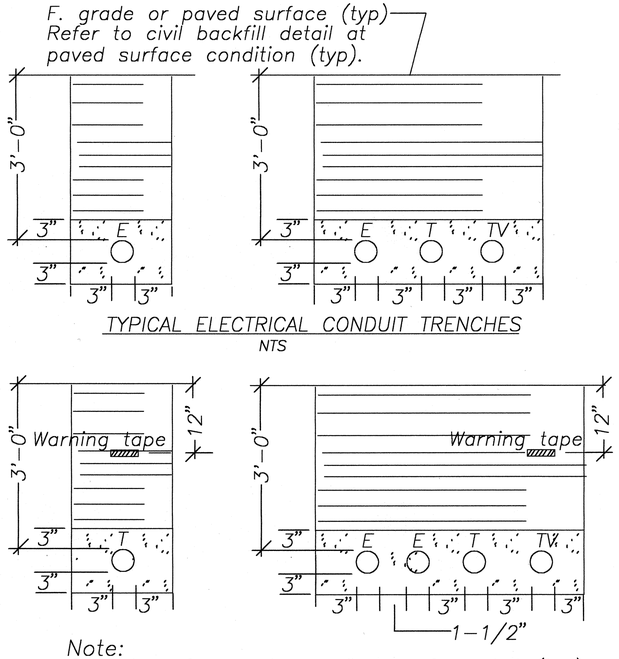

TYPICAL ELECTRICAL CONDUIT TRENCHES
NTS

Note:
See plans for number and size of conduit (typ).
E–Electric or Meco conduit.
T–Telephone or Htco conduit.
TV–TV or Hatv conduit.
Install a warning tape approved by Verizon above all Htco conduits.
Excavation and backfill to be in accordance with Section 206 of the Special Provisions.

TYPICAL ELECTRICAL, TELEPHONE AND TV CONDUIT TRENCH SECTIONS
NTS

Duct Notes:
1. All conduits shall be PVC Schedule 40.
2. All unwired conduits shall contain a pull line approved by the respective utility company for wire pulling.
3. After conduit is installed, the contractor shall pass a smooth bullet shaped wooden test mandrel through to test for freedom from burrs and obstructions the entire length of the conduits.
4. Backfill legend:

Type "A" backfill
In accordance with Section 206 of Special Provisions
For backfill in existing pavement areas, see detail in Sheet 66.

Type "B" backfill
In accordance with Section 206 of Special Provisions
For backfill in existing pavement areas, see detail in Sheet 66.

Note
If the normal material in the bottom of the trench is not Type "B" an additional 3" shall be excavated and filled with Type "B" material.

Concrete encasement shall be 2500psi in 28 days, max aggregate size shall be 3/4"

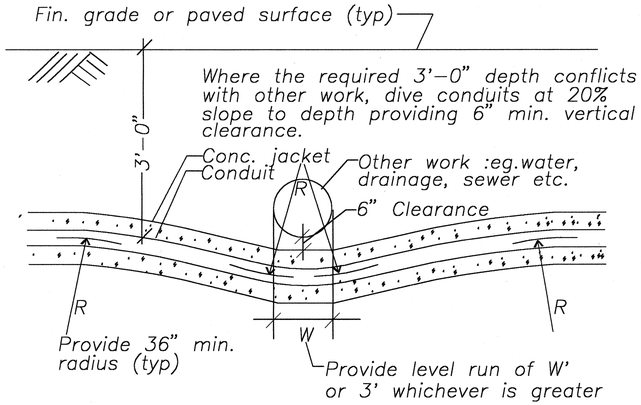

TYPICAL DUCTS CROSSING UNDER OTHER WORK
NTS

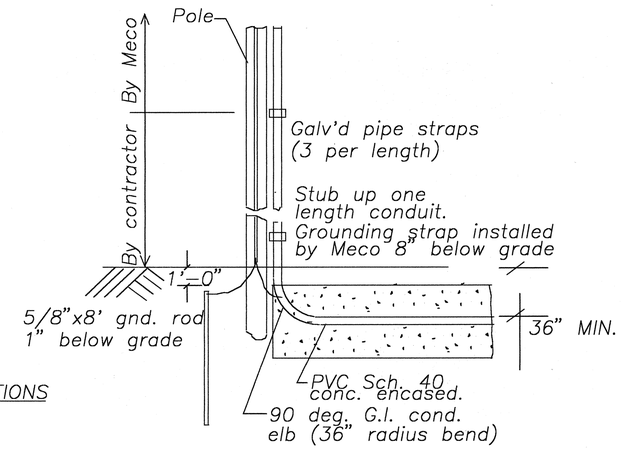

TYPICAL MECO RISER
NTS

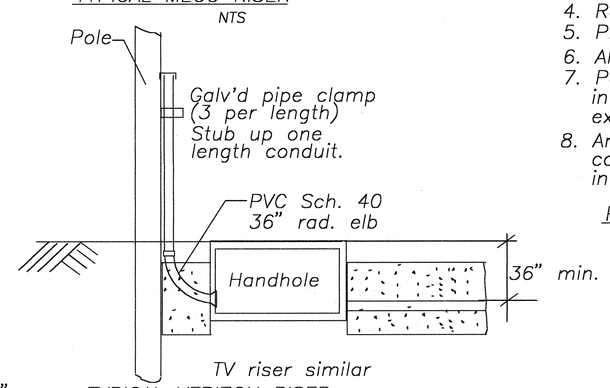

TYPICAL VERIZON RISER
NTS

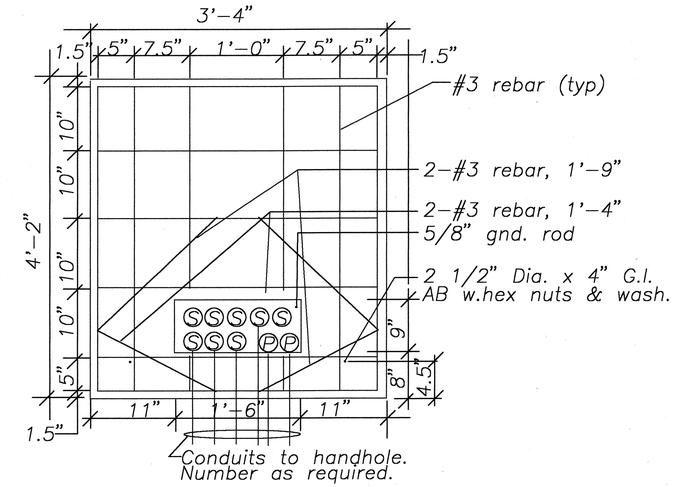

PRECAST PAD PLAN
NTS

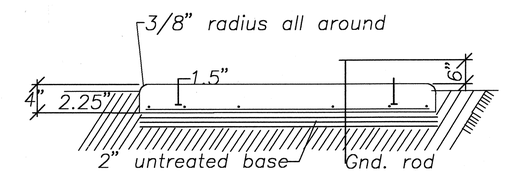

PRECAST PAD ELEVATION
NTS

1. Compressive strength of concrete shall be 3000psi at 28 days.
2. Top of pad shall be smooth, true, level and other exposed surfaces shall be smooth and free from defects.
3. Concrete shall be cured by approved method (ASTM A15).
4. Rebar shall be clean deformed bars.
5. Precast pad shall be made by entity approved by Meco.
6. All items shall be furnished in place by contractor.
7. Pad site shall be graded and compacted to 95% relative compaction in accordance with Section 206. Slope shall be towards road not exceeding 1/2" per foot.
8. An area 3'–8" x 4'–6" and 2" deep shall be excavated after compaction. This area shall be filled with 2" compacted base in accordance w. Section 305.

PRECAST CONCRETE FOR PADMOUNT TRANSFORMER
NTS

DATE	REVISION
1/08/02	Added transformer pad details
1/08/02	Revised backfill notes

DAVID S. SONG LICENSED PROFESSIONAL ENGINEER NO. 4901-E HAWAII, U.S.A.

THIS WORK WAS PREPARED BY ME OR UNDER MY SUPERVISION

STATE OF HAWAII
DEPARTMENT OF TRANSPORTATION
HIGHWAYS DIVISION

DUCTLINE TRENCHING DETAILS

PUUNENE AVENUE WIDENING
Kuihelani Highway to Hansen Road
And
MOKULELE HIGHWAY WIDENING
Hansen Road to Vicinity of Cane Haul Road Crossing
Federal - Aid Project No. NH-A311(3)

Scale: 1" = 40' Date: October 2001

SHEET No. E-9 OF 10 SHEETS

ORIGINAL PLAN | SURVEY PLOTTED BY | DRAWN BY | TRACED BY | DESIGNED BY | QUANTITIES BY | CHECKED BY | DATE | NOTE BOOK | No.

L:/M9901/APRIL-MEET/PHASE2.DWG
JN: M9901.00
PLOT: 1=1 4/1/99

ADD. 158