FED.ROAD DIST.NO.	STATE	FED. AID PROJ. NO.	FISCAL YEAR	SHEET NO.	TOTAL SHEETS
HAWAII	HAW.	NH-037-1(24)	2005	181	288

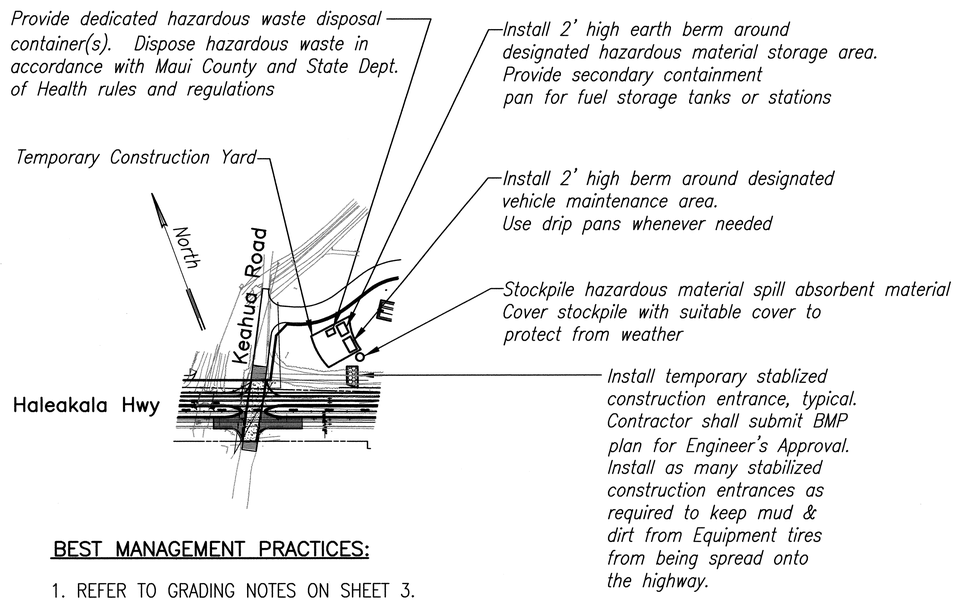

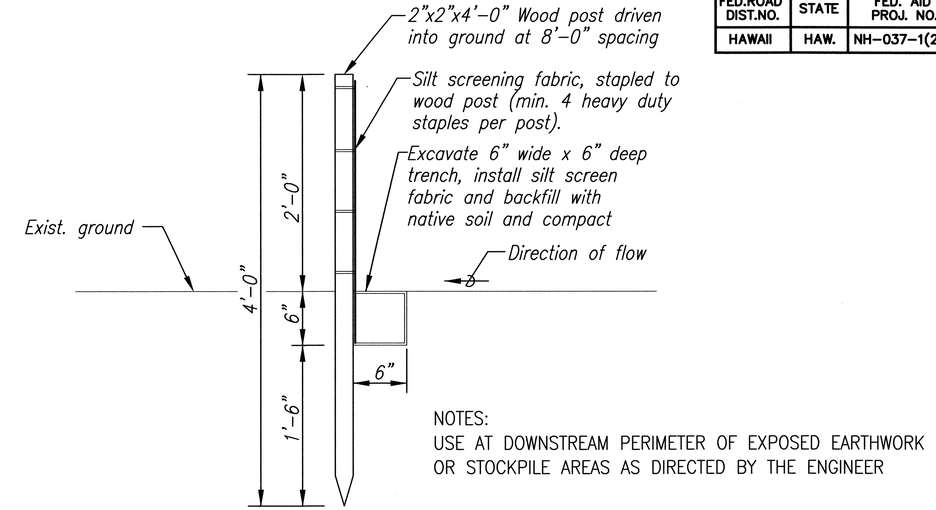

NOTES:
USE AT DOWNSTREAM PERIMETER OF EXPOSED EARTHWORK OR STOCKPILE AREAS AS DIRECTED BY THE ENGINEER

TEMPORARY TYPICAL SILT FENCE DETAIL

NOT TO SCALE

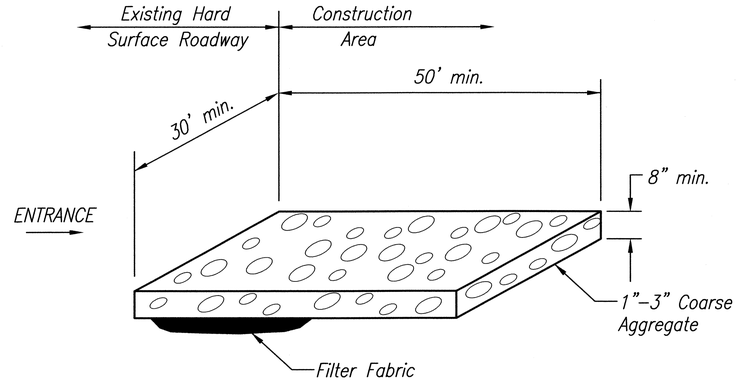

TEMPORARY STABILIZED CONSTRUCTION ENTRANCE

NOT TO SCALE

BEST MANAGEMENT PRACTICES:

1. REFER TO GRADING NOTES ON SHEET 3.
2. REFER TO WASTE MANAGEMENT NOTES ON SHEET 3.
3. REFER TO WATER QUALTIY CONTROL NOTES ON SHEET 4.
4. REFER TO TEMPORARY EROSION CONTROL NOTES ON SHEET 4. "SPECIAL PROVISION SECTION 209 – EROSION CONTROL" IS ALSO RERENCED IN THE TEMPORARY EROSION CONTROL NOTES.
5. REFER TO WATER POLLUTION AND EROSION CONTROL NOTES ON SHEET 4.
6. BEST MANAGEMENT PRACTICES FOR THIS PROJECT ARE NOTED OR SHOWN ON THIS SHEET. LOCATIONS OF THE BMP FEATURES SHOWN ON THIS SHEET IS FOR PLANNING ONLY. ACTUAL LOCATIONS SHALL BE FIELD DETERMINED BY THE CONRACTOR WITH THE ENGINEER'S REVIEW AND APPROVAL.

   CONTRACTOR SHALL PLAN AND IMPLEMENT THESE BMP'S AND ANY ADDITIONAL BMP'S APPLICABLE TO ITS OPERATIONS OR AS DIRECTED BY THE ENGINEER.
7. DUST CONTROL:
   A. PLAN AND SCHEDULE WORK TO MINIMIZE EXPOSED EARTHWORK AREA AT ANY GIVEN TIME.
   B. PROVIDE AND OPERATE DUST CONTROL EQUIPMENT OF ADEQUATE QUANTITY AND CAPACITY, E.G., NUMBER OF WATER TRUCK(S), WATER TANK CAPACITY, AND WATER SPRINKLING RATE, TO KEEP UP WITH CONSTRUCTION OPERATIONS.
   C. LIMIT ON-SITE VEHICLE TRAFFIC TO LOW SPEED, E.G., 15 MPH, WHEN TRAVELLING ON DUST-PRONE ROADS.
8. EMPLOYEE AND SUBCONTRACTOR TRAINING:
   A. CONTRACTOR SHALL TRAIN ITS EMPLOYEES AND SUBCONTRACTORS OF THE BMP'S.
   B. CONTRACTOR SHALL TIMELY KEEP ITS EMPLOYEES AND SUBCONTRACTORS INFORMED OF ANY BMP CHANGES.

ORIGINAL PLAN | NOTE BOOK No. | SURVEY PLOTTED BY | DRAWN BY | TRACED BY | DESIGNED BY | QUANTITIES BY | CHECKED BY | DATE

ERIC N. S. HEE LICENSED PROFESSIONAL ENGINEER No. 5292-C HAWAII, U.S.A.

THIS WORK WAS PREPARED BY ME OR UNDER MY SUPERVISION.

ENGINEERS SURVEYORS HAWAII, INC.

LICENSE EXPIRATION DATE

STATE OF HAWAII
DEPARTMENT OF TRANSPORTATION
HIGHWAYS DIVISION

BEST MANAGEMENT PRACTICES

HALEAKALA HIGHWAY WIDENING, PHASE 2
HANA HIGHWAY TO PUKALANI BYPASS
FED. AID PROJ. NO. NH-037-1(24)

SCALE: AS NOTED DATE: MAY, 2005

SHEET No. 1 OF 1 SHEETS