FED. ROAD DIST. NO.	STATE	PROJ. NO.	FISCAL YEAR	SHEET NO.	TOTAL SHEETS
HAWAII	HAW.	37B-02-94	1995	5	8

TRAFFIC SIGNAL LEGEND

- C — New Traffic Signal Controller
- New Traffic Signal Conduits & Cables
- Exist. Traffic Signal Conduits
- New 12" RYG Traffic Signal Head
- New 12" RY↑ Traffic Signal Head
- New 12" RY← Traffic Signal Head
- New 12" RY← Traffic Signal Head (Programmable Visibility)
- New Type I Traffic Signal standard
- 20' 12' — New Type II Traffic signal Standard w/ 20' Mast Arm and 12' between Traffic Signal Heads
- New Pedestrain Signal Head
- PB — New Type B Pullbox w/Modified Cover
- PB — New Type B Pullbox
- PB — New Type A Pullbox
- pb — Exist. Type B Pullbox
- New Loop Detectors

TRAFFIC SIGNAL NOTES

1. The locations of the Traffic Signal Standards, Pedestrian Push Buttons, Traffic Controller, Pullboxes, Conduits and Loop Detectors shall be staked out in the field by the Contractor and approval of the locations shall be obtained from the Engineer prior to construction and installation.
2. All splicing shall be done in the pullboxes.
3. Furnishing and installing the conduit stubouts (pullboxes to edge of pavement) will not be paid for separately but shall be considered incidental to the various contract items
4. A solid #8 bare copper wire shall be pulled with the traffic signal control cable for equipment ground. Cost shall be incidental to the installation of the control cable.
5. All Traffic signal controller equipment shall be completely wired in the cabinet and shall control the traffic signals as called for in the plans.
6. The Contractor shall install one meter socket and 50 amp. breaker as shown on the plans in accordance with MECO requirements. The Meter shall be mounted between 5 feet and 6 feet above ground. Meter socket shall be 4-prong, complete with a manual circuit closing device.
7. The loop amplifier units furnished for this project shall be capable of operating the loop detector configurations shown on the plans. Cost for the loop amplifier shall be incidental to the installation of the loop detector.
8. Should any defect be encountered during the warranty period, the manufacturer will be notified and he shall promptly correct such defect. Service call (by factory qualified representative) during the warranty period for repairs or other maintenance shall be answered within 24 hours and shall be done at no expense whatsoever to the State. All repairs shall be done as soon as possible.
9. Existing pullboxes and conduits not incorporated into the new traffic signal system shll be abandoned in place. Abandoned conduits shall be plugged with concrete.

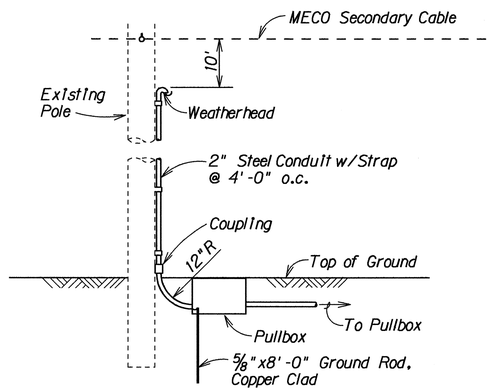

SERVICE POLE DETAIL
Not to Scale

Notes:

1. Pedestal shall be hot-dipped galv. after fabrication.
2. All fastening bolts, nuts & washers shall be stainless steel.
3. Provide 4 ft. cl. in front of meter.
4. * Sealable enclosure 6"Dx10"Wx12"H.

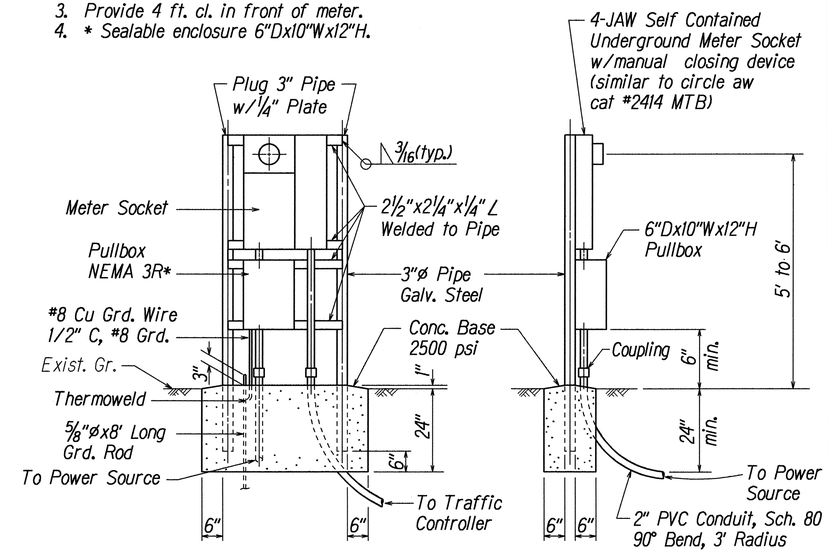

METER PEDESTAL FOR UNDERGROUND SERVICE
Not to scale

NOTES:

1. Maui Electric Co. shall assist the Contractor in Power Source connection.
2. Contractor shall make all electrical connections to controller, provide breaker, ground and 2" PVC conduit, schedule 80.
3. Contractor shall provide Maui Electric Co. one week advance notice for any work by Maui Electric Co.
4. A utility company standby man is required to be at the site at the time any non-utility company personnel will be breaking into or entering any facilities that contain energized utility company equipmant or cables.
5. Three working days advance notice is required by the utility company for any inspection service or standby man. Call - phone 871-7777.
6. The installation of the meter pedestial for underground service will not be paid for separately but considered incidental to the Meter Socket and Breaker (50 amps).

ELECTRICAL SERVICE DETAIL

STATE OF HAWAII
DEPARTMENT OF TRANSPORTATION
HIGHWAYS DIVISION

TRAFFIC SIGNAL LEGEND, DETAILS & NOTES

HALEAKALA HIGHWAY (PUKALANI BY-PASS)
TRAFFIC SIGNALS AT MAKAWAO AVENUE
PROJECT NO. 37B-02-94

Not to Scale — Date: June, 1994

SHEET No. 1 OF 2 SHEETS

ORIGINAL PLAN — SURVEY PLOTTED BY — DRAWN BY R. Arii — TRACED BY — DESIGNED BY G. Kakehi — QUANTITIES BY — CHECKED BY — DATE 3/94 — NOTE BOOK No. — Lpbpttsleg.dgn

LEGEND FOR AS-BUILT POSTINGS

~~	Squiggly line for as-built deletion
~~100.00~~	Double line for as-built deletion
Roadway	Text for as-built posting

TRUE NORTH
SCALE : 1" = 20'

MAKAWAO AVE @ STA. 9+55± LT.
Remove Exist. Sign & Post and Install New Sign and 12" Flashing Yellow Light on 10-Foot Type I Signal Standard Flasher to operate 24 hours.

12" Flasher
STOP AHEAD
W3-3 (36"x36")
RM-9

@ STA. 119+75± RT.
INSTALL SIGNAL AHEAD SIGN W/POST

SIGNAL AHEAD

@ STA. 125+75± RT.
Install Sign and 12" Flashing Yellow LIght on 10-Foot Type I Signal Standard. Flasher to operate only during Phase 2 & 6 Yellow and Red Intervals.

12" Flasher
STOP AHEAD WHEN FLASHING
W3-4 (48"x48")
RM-9

@ STA. 136+50± LT.
Install Sign and 12" Flashing Yellow Light on 10-Foot Type I Signal Std. Flasher to operate only during Phase 2 & 6 Yellow and Red Intervals.

12" Flasher
STOP AHEAD WHEN FLASHING
W3-4 (48"x48")

@ STA. 142+50± LT.
INSTALL SIGNAL AHEAD SIGN W/POST

SIGNAL AHEAD

MAKAWAO AVENUE
8+00
To Makawao
To Kahului
To Kula
To Pukalani
126+00
130+00
136+00
R/W
conc. headwall
Install Type II Traffic Signal Standard with 20-Foot Mast Arm, Signal Heads & Pedestrian Signal Heads
Install Type I Traffic Signal Standard with Signal Heads & Pedestrian Signal Heads
Install Type I Traffic Signal Standard with Signal Head & Pedestrian Signal Heads
Install Type II Traffic Signal Standard with 35-Foot Mast Arm, Signal Heads & Pedestrian Signal Heads
1 Ea., 4-6'x6' Loop Detectors Centered in Lane
1 Ea., 6-6'x6' Loop Detectors Centered in Lane
2 Ea., 1-6'x6' Loop Detectors Centered in Lane
4 Ea., 1-6'x6' Loop Detectors Centered in Lane
1 Ea., 6'x6' Loop Detector Centered in Lane
DELETE
MOVED BACK
HALEAKALA HIGHWAY (PUKALANI BY-PASS)
600± L.F.
130 L.F.
120 L.F.
125 L.F.
105 L.F.
100 L.F.
150 L.F.
600± L.F.
140 L.F.
250' From Stop Bar
Install Controller Assembly (Model 170 Unit & Auxiliary Equipment, Model 336 Cabinet, Ground Mounted w/Concrete Base), and added/installed hi-pedestal or controller base plate.
Install Meter w/Pedestal for Underground Service. For Detail, See Plan Sht. No. 5
Power Source. (Pole E12) For Det., See Plan Sht. No. 5

MAKAWAO AVE @ STA. 3+10± RT.
Remove Exist. Sign & Post and Install New Sign and 12" Flashing Yellow Light on 10-Foot Type I Signal Standard Flasher to operate 24 hours.

12" Flasher
STOP AHEAD
W3-3 (36"x36")
RM-9

TRAFFIC SIGNAL SYSTEM CONDUIT AND CABLE SCHEDULE

	DELTA ITEM NO. (△)										
	△1	△2	△3	△4*	△5*	△6*	△7	△8*	△9	△10	△12
QUANTITY OF 2" C, SEE NOTE NO. 1	1	1	1	1	2	2	3	2	6	2	1	7
QUANTITY OF 26/C #14 CONTROL CABLE					1	1	1	1	2			2
QUANTITY OF 2/C #14 SHIELDED LOOP DETECTOR, FLASHER AND PEDESTRIAN PB CABLE	1	2	4	1	3	1	7	6	14	1		14
QUANTITY OF 3/C #6										1	1	1

NOTE: 1. ALL CONDUITS SHALL BE SCHEDULE 80 PVC, UNLESS OTHERWISE NOTED.
* EXISTING CONDUITS

TRAFFIC SIGNAL HEAD SCHEDULE

Traffic Signal Head Type and Description	12" RYG Traffic Signal Head	12" RY↑ Traffic Signal Head	12" RY← Traffic Signal Head	Pedestrian Signal Head
Pole Letter Signal Head Number	A-1 B-4 A-2 C-2 B-2 D-3 B-3 D-4	D-2	A-3 B-1 * C-1 D-1 *	A-4 D-5 B-5 D-6 C-3 C-4

* With Programmed Visibility

RI0-4b (Sign Varies w/Direction)

- (A) (⟶) RI0-4b(R)
- (B) (⟵) RI0-4b(L)
- (C) (⇆) RI0-4b(L)
- (D) (⇆) RI0-4b(L), RI0-4b(R)

PEDESTRIAN PUSH BUTTON & SIGN

BARRIER
Ring A: 1 2 3 4
Ring B: 5 6 7 8

PHASE DIAGRAM

ORIGINAL PLAN PREPARED BY	DATE 3/94
SURVEY PLOTTED BY	
DRAWN BY	E.L.
TRACED BY	
DESIGNED BY	G. Kataki
QUANTITIES BY	
CHECKED BY	
NOTE BOOK	

FED. ROAD DIST. NO.	STATE	PROJ. NO.	FISCAL YEAR	SHEET NO.	TOTAL SHEETS
HAWAII	HAW.	37B-02-94	1995	6	8

STATE OF HAWAII
DEPARTMENT OF TRANSPORTATION
HIGHWAYS DIVISION

TRAFFIC SIGNAL PLAN

HALEAKALA HIGHWAY (PUKALANI BY-PASS)
TRAFFIC SIGNALS AT MAKAWAO AVENUE
PROJECT NO. 37B-02-94

Scale: 1"=20' Date: June, 1994

SHEET No. 2 OF 2 SHEETS

AS-BUILT 6