FED. ROAD DIST. NO.	STATE	FED. AID PROJ. NO.	FISCAL YEAR	SHEET NO.	TOTAL SHEETS
HAWAII	HAW.	F-037-1(7)	1972	19	113

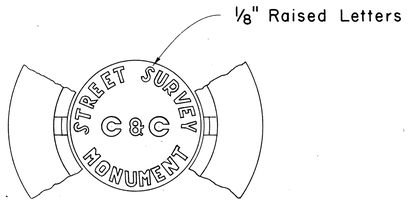

TOP VIEW OF COVER AND PORTION OF FRAME

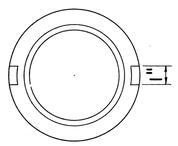

BOTTOM OF COVER

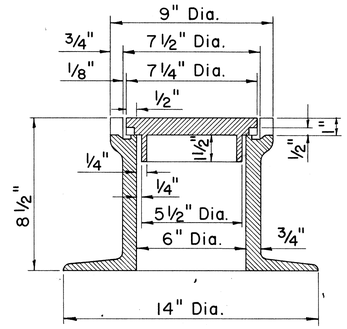

SECTIONAL VIEW OF FRAME AND COVER

STREET SURVEY MONUMENT CASTINGS

Scale: 3" = 1'-0"

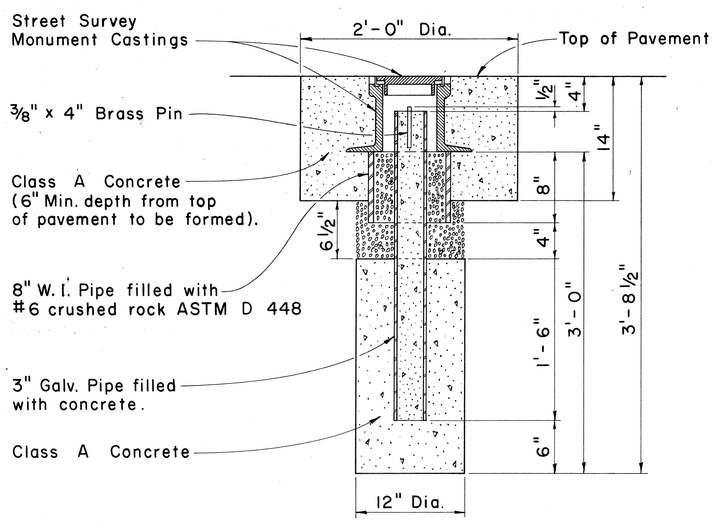

NOTE:

Where the excavation extends into solid rock the depth may be decreased if approved by the Engineer.

STREET SURVEY MONUMENT

Scale: 1 1/2" = 1'-0"

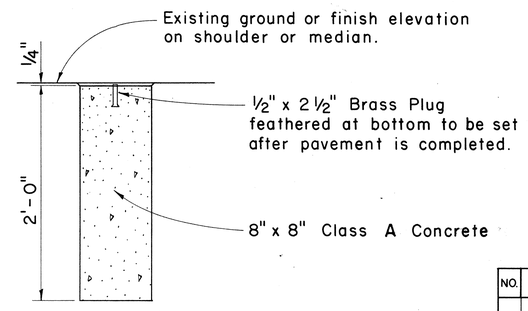

DETAIL FOR ℄ AND REFERENCE SURVEY MONUMENT

Scale: 1 1/2" = 1'-0"

APPROVAL RECOMMENDED:

M. Hirozawa — HIGHWAY DESIGN ENGINEER — 12-4-69 DATE

APPROVED:

Walter S. Sakai — ASSISTANT CHIEF, ENGINEERING — 12-10-69 DATE

NO.	REVISION	APPROVED BY	DATE

STATE OF HAWAII
DEPARTMENT OF TRANSPORTATION
HIGHWAYS DIVISION

STANDARD DETAILS

CENTERLINE, REFERENCE SURVEY AND C & C STREET SURVEY MONUMENTS

Scale: As Shown

SHEET No. OF SHEETS | DD 613.1

19

ORIGINAL PLAN	SURVEY PLOTTED BY	DATE
	DRAWN BY	"
	TRACED BY	"
	DESIGNED BY	"
NOTE BOOK	QUANTITIES BY	"
No.	CHECKED BY	"