DRAINAGE & IRRIGATION SUMMARY

PROJECT: HALEAKALA HWY. - HANA HWY. TO VICINITY OF HALIIMAILE ROAD

PROJECT NO.: F-037-1(7)

FED. ROAD DIST. NO.	STATE	FED. AID PROJ. NO.	FISCAL YEAR	SHEET NO.	TOTAL SHEETS
HAWAII	HAW.	F037-1(7)	1972	25	113

	TYPE OF STRUCTURE	STATION (FROM - TO)	Structure Excavation Other Than at Bridges	Ditch and Channel Excavation	Class "A" Concrete Other Than at Bridges	Concrete in 4'x4' Box Culvert at Detour Road Sta. 19+81.70	Concrete in 10'x4.5' Box Culvert at Sta. 53+08±	Concrete in 4'x4' Box Culvert at Sta. 94+92.5	Concrete in 10'x4' Box Culvert at Sta. 205+84±	Class "B" Concrete Other Than in Bridges	Reinforcing Steel in 4'x4' Box Culvert at Detour Rd. Sta. 19+81.70	Reinforcing Steel in 10'x4.5' Box Culvert at Sta. 53+08±	Reinforcing Steel in 4'x4' Box Culvert at Sta. 94+92.5	Reinforcing Steel in 10'x4' Box Culvert at Sta. 205+84±	Reinforcing Steel Other Than in Bridges	18" CMP, Sheet Thickness, 0.079 Inch or 18" RCP, Cl. III or 18" ACP, Cl. III	24" CMP, Sheet Thickness, 0.079 Inch or 24" RCP, Cl. III or 24" ACP, Cl. III	36" CMP, Sheet Thickness 0.079 Inch or 36" RCP, Cl. III or 36" ACP, Cl. III	24-Inch Siphon Pipe	36-Inch Siphon Pipe	Type "A" Trash Rack	Type "B" Trash Rack	Lined Irrigation Ditch Type "A"	Lined Irrigation Ditch Type "B"
	ITEM NO.		206.01	207.01	503.101	503.033	503.031	503.032	503.034	503.201	602.033	602.031	602.032	602.034	602.101	603.7020	603.7200	603.7447	603.8070	603.8074	604.250	604.251	640.80	640.81
	UNIT USED		C.Y.	C.Y.	C.Y.	L.S.	L.S.	L.S.	L.S.	C.Y.	L.S.	L.S.	L.S.	L.S.	L.b.	L.F.	L.F.	L.F.	L.F.	L.F.	Ea.	Ea.	L.F.	L.F.
DRAINAGE	Standard Concrete Drop Intake	℄ Sta. 214+86 %s 32.5' Lt.	25							2.0							34							
	Standard Concrete Headwall	℄ Sta. 2+50 Lt.	48							1.5					42		88							
	Standard Concrete Headwall	℄ Sta. 2+50 Rt.	5							1.5					42									
	Standard Concrete Headwall	℄ Sta. 11+46 Rt.	36							1.5					33	72								
	Standard Concrete Headwall	℄ Sta. 11+46 Lt.	4							1.5					33									
	Standard Concrete Headwall	℄ Sta. 60+02 Rt.	134							3.0					60			116						
	Standard Concrete Headwall	℄ Sta. 60+02 Lt.	10							3.0					60									
	18" Culvert Crossing	℄ Sta. 157+50 %s 47' Lt.	17														44							
	24" Culvert Crossing	Detour Road Sta. 3+02.5	58							2.0					48		114							
IRRIGATION	Siphon Inlet Structure	℄ Sta. 15+90.4± Rt.	110	2						1.5					24		182							
	Siphon Outlet Structure	℄ Sta. 15+34.5± Lt.	19		4.5										233						1			
	4'x4' Concrete Box Culvert	℄ Detour Road Sta. 19+81.70	40			(70) C.Y.					(4,706) Lbs.													
	10'x4.5' Concrete Box Culvert	℄ Hwy Sta. 53+08±	200				(118) C.Y.					(14,313) Lbs.												
	4'x4' Concrete Box Culvert	℄ Hwy Sta. 94+92.5	93					(69) C.Y.					(4,186) Lbs.											
	Siphon Inlet Structure	℄ Sta. 119+47.05 Rt.	661	14	7.5					1.5					478					288		1		
	Siphon Outlet Structure	℄ Sta. 118+02.45 Lt.	29	12	7.0					1.5					472						1			
	Siphon Inlet Structure	℄ Sta. 172+84.13 Lt.	568	10	8.0					1.5					469					246	1			
	Siphon Outlet Structure	℄ Sta. 173+75.25 Rt.	33	118	8.5					1.5					477						1		221	
	Siphon Inlet Structure	℄ Sta. 189+97.5 Lt.	259	22	5.5					4.5					324				255		1			
	Siphon Outlet Structure	℄ Sta. 189+97.5 Rt.	21		5.0										305						1			
	10'x4' Concrete Box Culvert	℄ Hwy. Sta. 205+84±	125						(113) C.Y.					(15,450) Lbs.										
	Lined Irrigation Ditch Type "B"	℄ Sta. 53+06 Rt.		2																				10
	Lined Irrigation Ditch Type "B"	℄ Sta. 53+55 Lt.		2																				10
	Lined Irrigation Ditch Type "B"	℄ Sta. 95+10 Lt.		2																				10
	Lined Irrigation Ditch Type "B"	℄ Sta. 95+12 Rt.		2																				10
	Lined Irrigation Ditch Type "B"	℄ Sta. 137+11 Rt.		3																				20
	Lined Irrigation Ditch Type "B"	℄ Sta. 137+26 Lt.		3																				20

FED. ROAD DIST. NO.	STATE	FED. AID PROJ. NO.	FISCAL YEAR	SHEET NO.	TOTAL SHEETS
HAWAII	HAW.	F-037-1(7)	1972	26	113

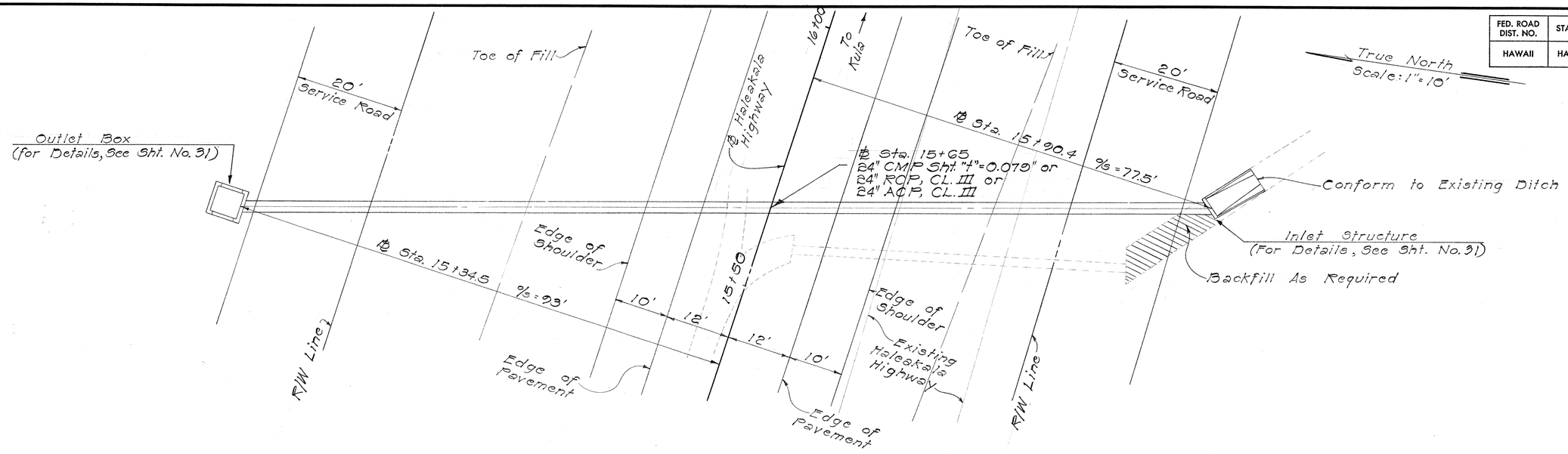

PLAN

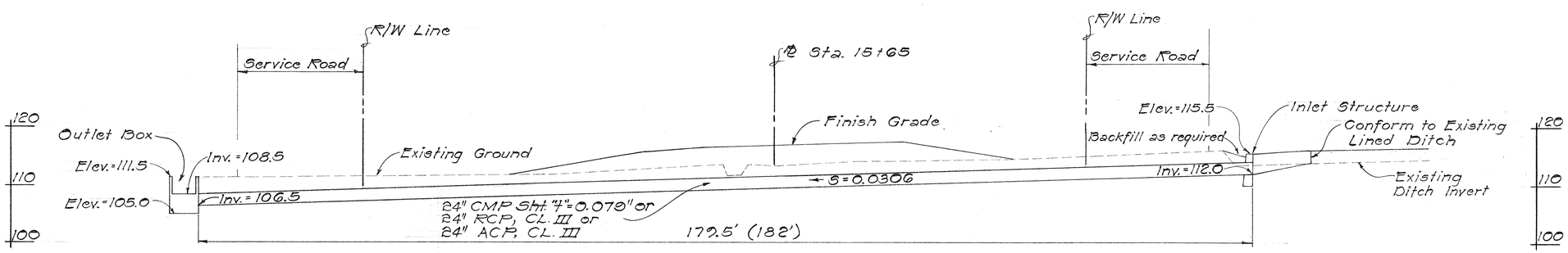

PROFILE – 24" CULVERT
AT ℄ STA. 15 + 65

Scale: Vert. = 1" = 10'
Hor. = 1" = 10'

ORIGINAL PLAN	SURVEY PLOTTED BY	DATE
	DRAWN BY	
	TRACED BY	
NOTE BOOK	DESIGNED BY	
	QUANTITIES BY	
No.	CHECKED BY	

STATE OF HAWAII
DEPARTMENT OF TRANSPORTATION
HIGHWAYS DIVISION

IRRIGATION DETAILS
HALEAKALA HIGHWAY
Hana Highway to Vicinity of Haliimaile Road
F.A.P. Proj. No. F-037-1(7)
Scale: As Noted Date: Feb. 7, 1972

SHEET No. 2 OF 13 SHEETS

26

FED. ROAD DIST. NO.	STATE	FED. AID PROJ. NO.	FISCAL YEAR	SHEET NO.	TOTAL SHEETS
HAWAII	HAW.	F-037-1(7)	1972	27	113

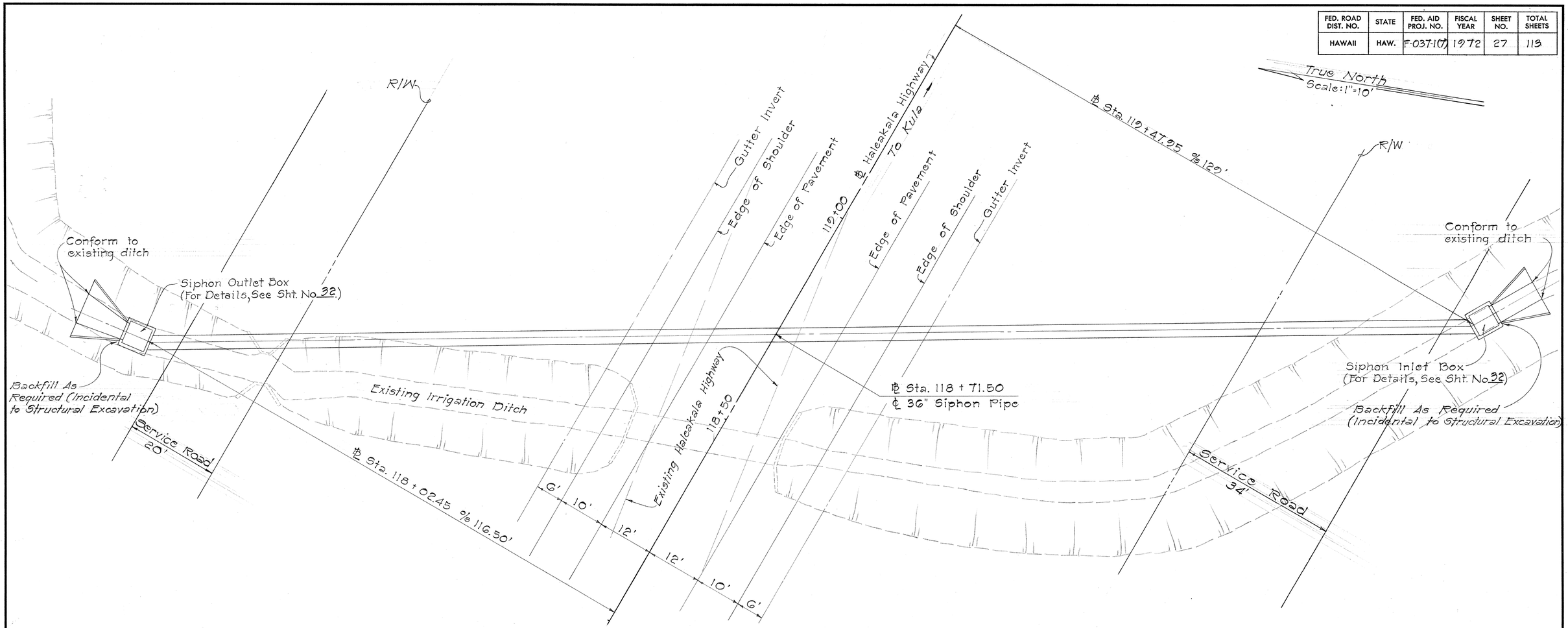

PLAN

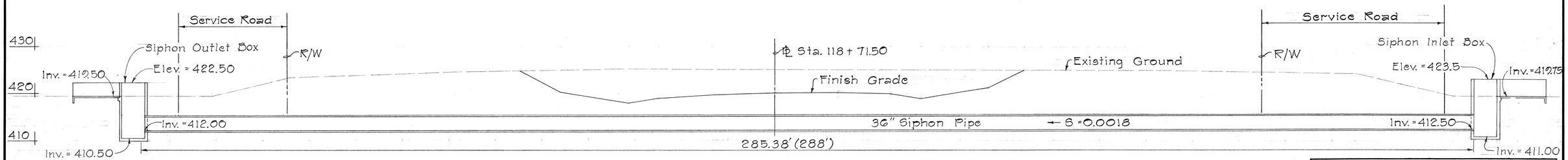

PROFILE - 36" SIPHON PIPE
AT ℄ STA 118+71.50

Scale: Hor. 1"=10'
Vert. 1"=10'

ORIGINAL PLAN	SURVEY PLOTTED BY
	DRAWN BY
	TRACED BY
NOTE BOOK	DESIGNED BY
	QUANTITIES BY
No.	CHECKED BY

DATE

STATE OF HAWAII
DEPARTMENT OF TRANSPORTATION
HIGHWAYS DIVISION

IRRIGATION DETAILS
HALEAKALA HIGHWAY
Hana Highway to Vicinity of Haliimaile Road
F.A.P. Proj. No. F-037-1(7)

Scale As Noted Date: Feb. 7, 1972

SHEET No. 3 OF 3 SHEETS

27

FED. ROAD DIST. NO.	STATE	FED. AID PROJ. NO.	FISCAL YEAR	SHEET NO.	TOTAL SHEETS
HAWAII	HAW.	F-037-1(7)	1972	28	113

Curve #1
R = 50.00'
T = 15.29'
Δ = 34°00'00"
L = 29.67'
C = 29.24'

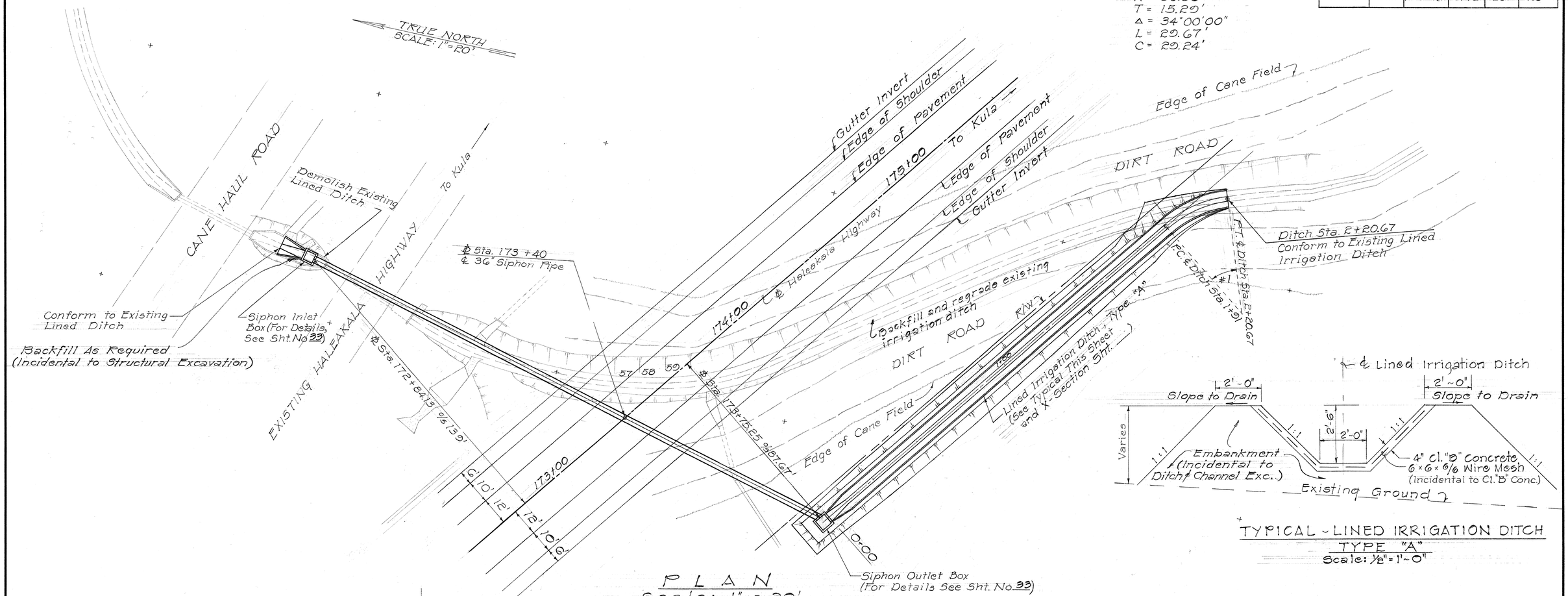

PLAN
Scale: 1" = 20'

TYPICAL - LINED IRRIGATION DITCH
TYPE "A"
Scale: ½" = 1'-0"

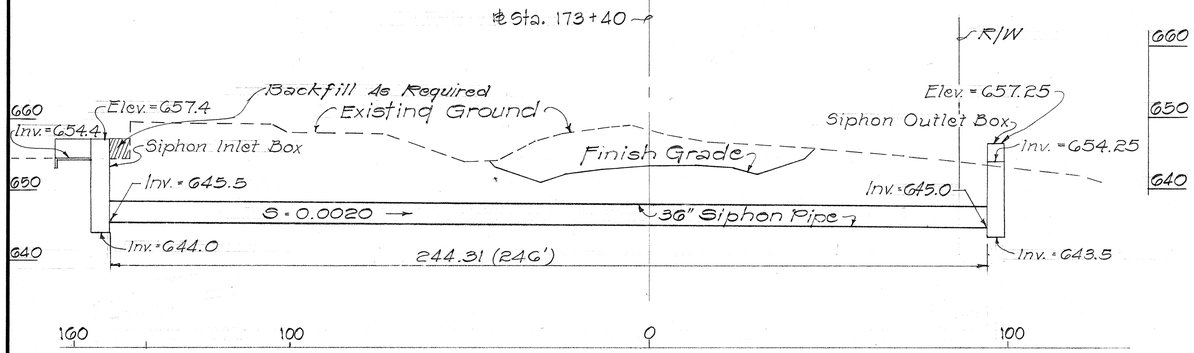

℄ PROFILE OF 36" SIPHON PIPE @ ℄ STA. 173+40
Scale: Horiz. 1" = 20'
Vert. 1" = 10'

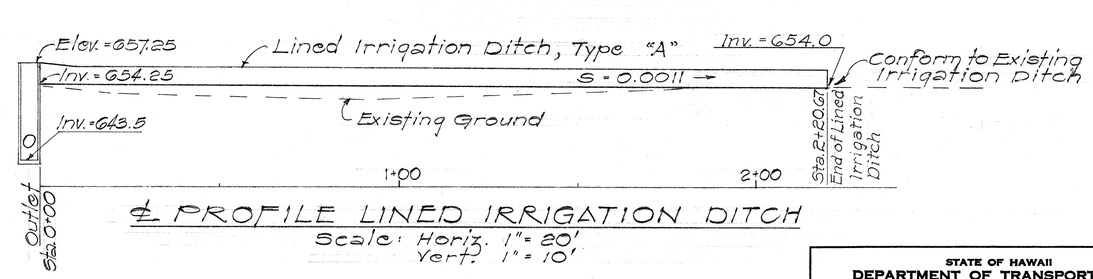

℄ PROFILE LINED IRRIGATION DITCH
Scale: Horiz. 1" = 20'
Vert. 1" = 10'

STATE OF HAWAII
DEPARTMENT OF TRANSPORTATION
HIGHWAYS DIVISION

IRRIGATION DETAILS

HALEAKALA HIGHWAY
Hana Highway to Vicinity of Haliimaile Road
F.A.P. Proj. No. F-037-1(7)
Scale As Noted Date: Feb. 7, 1972

SHEET No. 4 OF 13 SHEETS

ORIGINAL PLAN	SURVEY PLOTTED BY	DATE
	DRAWN BY	
	TRACED BY	
NOTE BOOK	DESIGNED BY	
	QUANTITIES BY	
No.	CHECKED BY	

K+E CRYSTALENE® TRACING PAPER L.A. 3888

28

FED. ROAD DIST. NO.	STATE	FED. AID PROJ. NO.	FISCAL YEAR	SHEET NO.	TOTAL SHEETS
HAWAII	HAW.	F-037-1(7)	1972	29	113

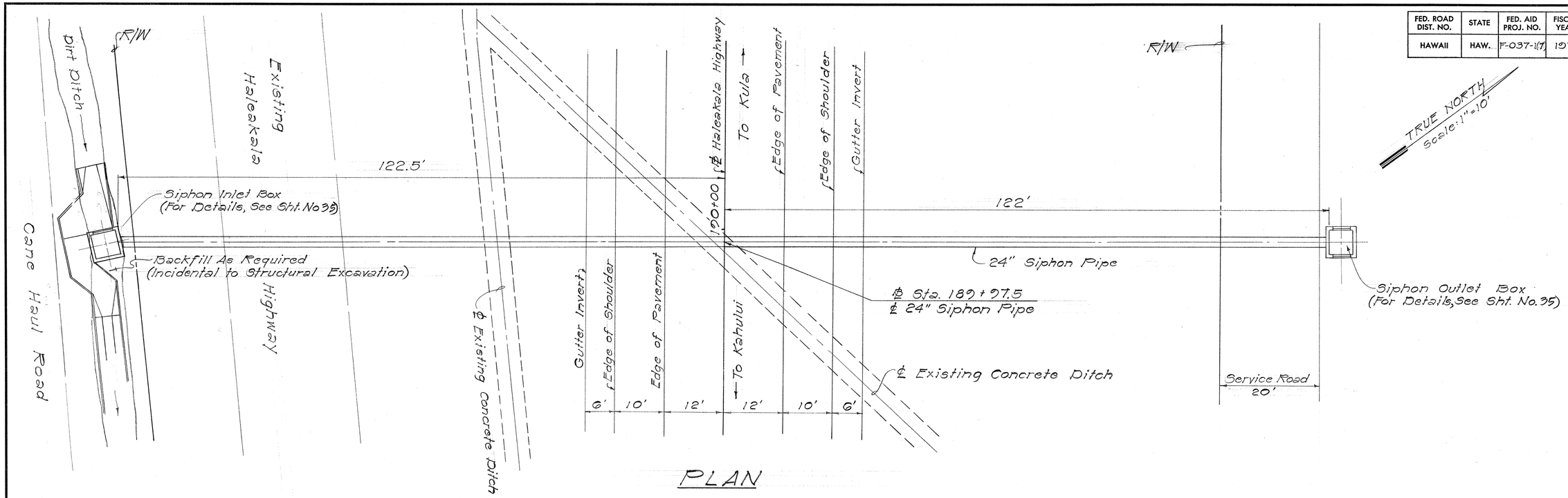

PLAN

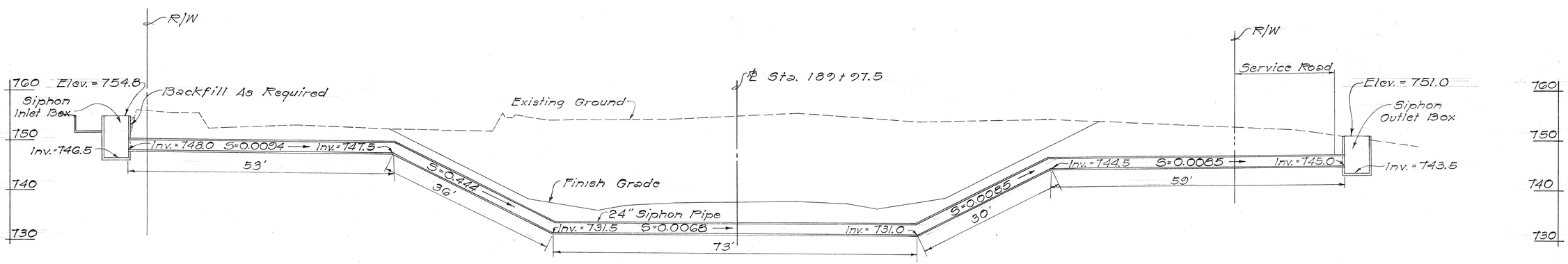

DELETE C.C.O. #2

~~PROFILE - 24" SIPHON PIPE~~
~~AT STA. 189+97.5~~

Scale: Hor. = 1" = 10'
Vert. = 1" = 10'

ORIGINAL PLAN	SURVEY PLOTTED BY
	DRAWN BY
	TRACED BY
NOTE BOOK	DESIGNED BY
	QUANTITIES BY
No.	CHECKED BY
	DATE

STATE OF HAWAII
DEPARTMENT OF TRANSPORTATION
HIGHWAYS DIVISION

IRRIGATION DETAILS
HALEAKALA HIGHWAY
Hana Highway to Vicinity of Haliimaile Road
F.A.P. Proj. No. F-037-1(7)
Scale: As Noted Date: Feb. 7, 1972

SHEET No. 5 OF 13 SHEETS

29

FED. ROAD DIST. NO.	STATE	FED. AID PROJ. NO.	FISCAL YEAR	SHEET NO.	TOTAL SHEETS
HAWAII	HAW.	F-037-1(7)	1972	30	113

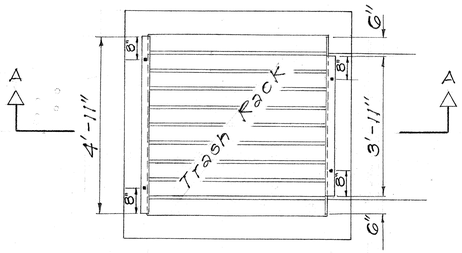

PLAN
Scale: 1/2" = 1'-0"

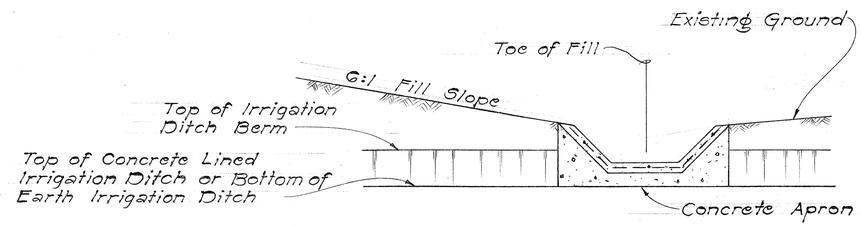

SECTION A-A

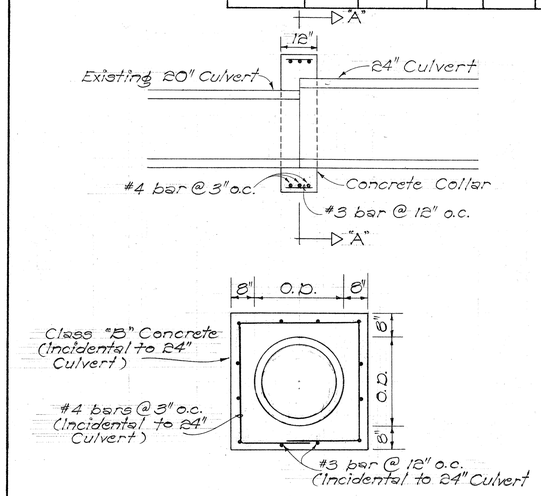

SECTION A-A

CONCRETE COLLAR AT STA. 214 + 52.5 % 96.5' Lt.
Scale: 1/2" = 1'-0"

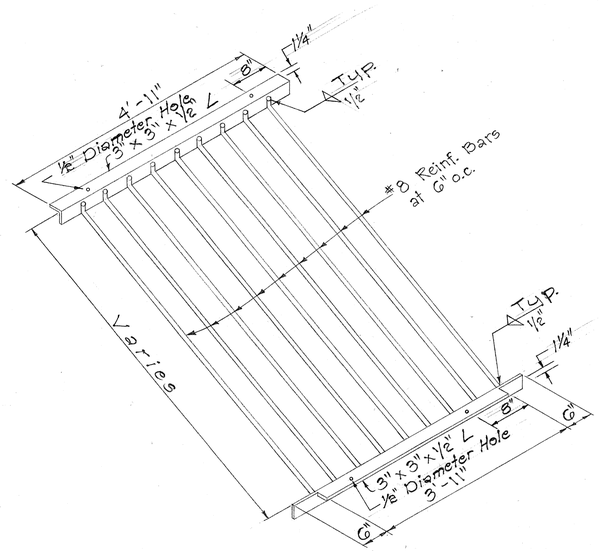

TRASH RACK DETAIL
Not to Scale

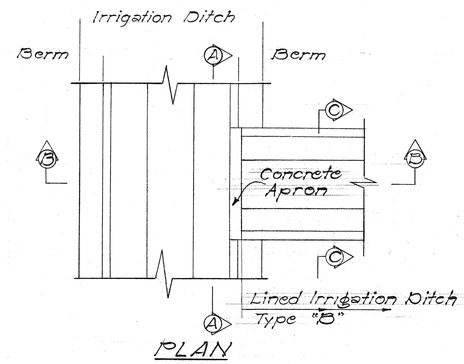

PLAN

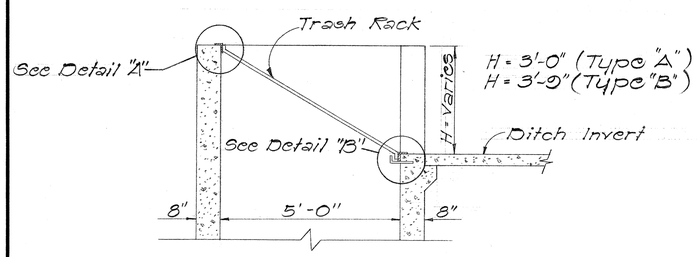

SECTION "A-A"
Scale: 1/2" = 1'-0"

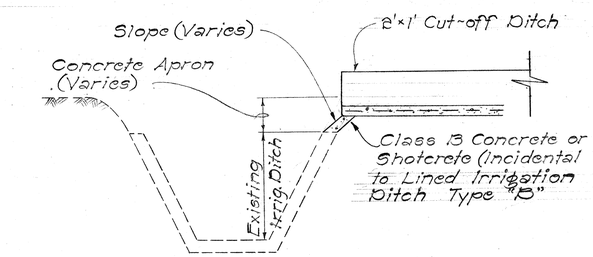

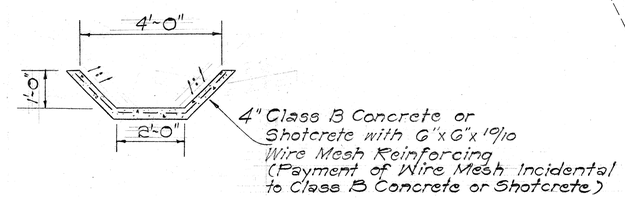

SECTION C-C

SECTION B-B

LINED IRRIGATION DITCH TYPE "B"
Not to Scale

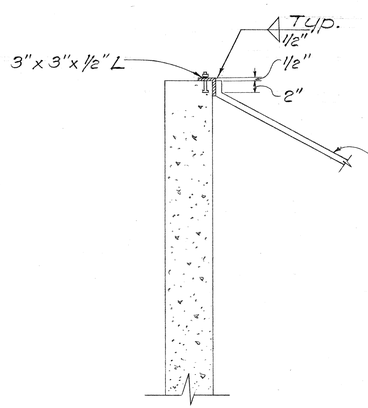

DETAIL "A"
Scale: 1" = 1'-0"

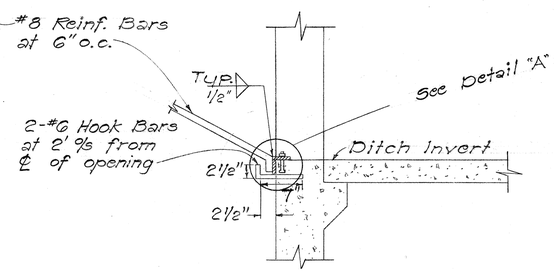

DETAIL "B"
Scale: 1" = 1'-0"

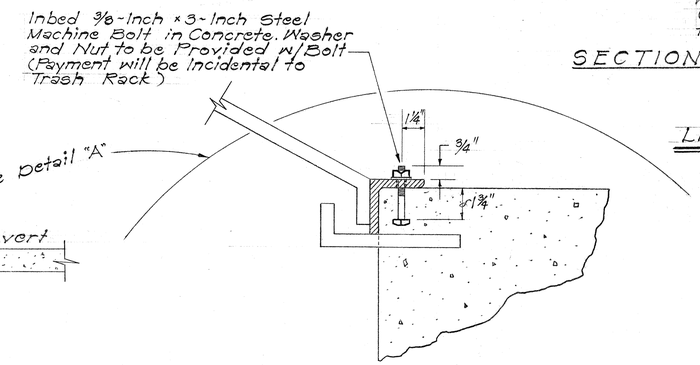

DETAIL "A"
Scale: 3" = 1'-0"

ORIGINAL PLAN	SURVEY PLOTTED BY	DATE
	DRAWN BY	"
	TRACED BY	"
NOTE BOOK	DESIGNED BY	"
	QUANTITIES BY	"
No.	CHECKED BY	"

STATE OF HAWAII
DEPARTMENT OF TRANSPORTATION
HIGHWAYS DIVISION

IRRIGATION DETAILS

HALEAKALA HIGHWAY
Hana Highway to Vicinity of Haliimaile Road

F.A.P. Proj. No. F-037-1(7)

Scale: As Noted Date: Feb 7, 1972

SHEET No. 6 OF 13 SHEETS

K+E CRYSTALENE® TRACING PAPER L.A. 3855

FED. ROAD DIST. NO.	STATE	FED. AID PROJ. NO.	FISCAL YEAR	SHEET NO.	TOTAL SHEETS
HAWAII	HAW.	F-037-1(7)	1972	31	113

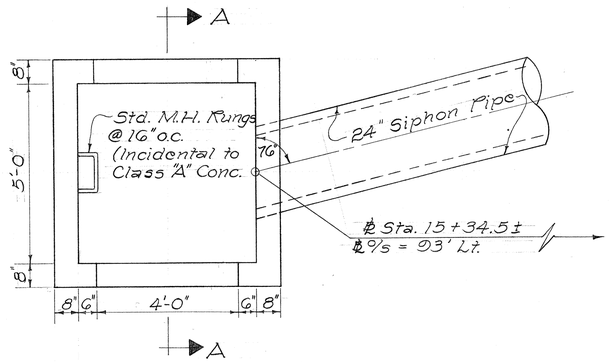

PLAN

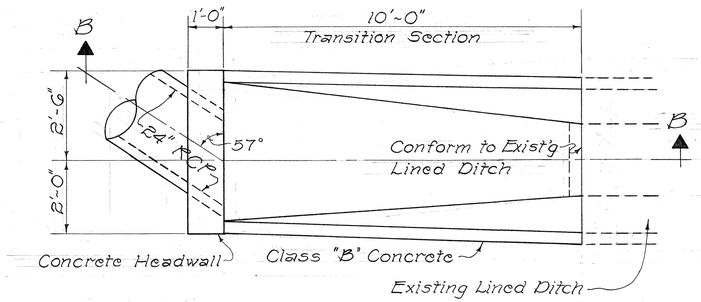

PLAN

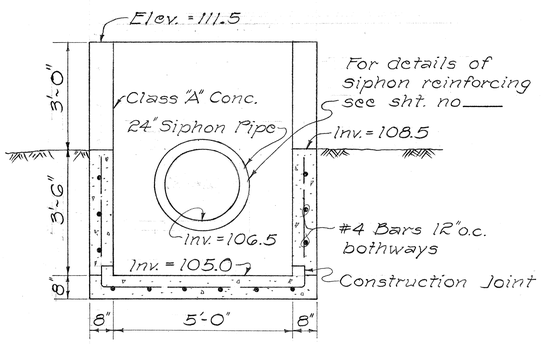

SECTION A-A

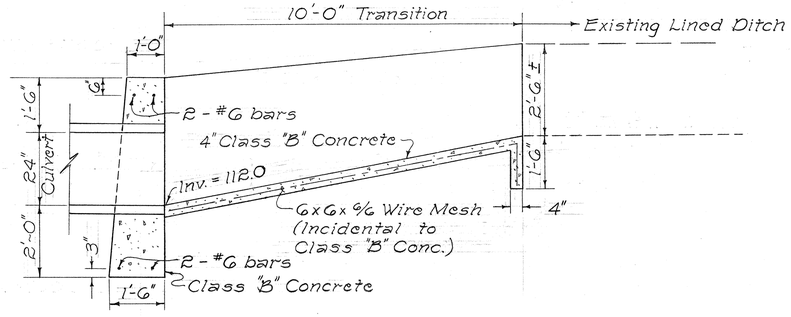

SECTION B-B

SIPHON OUTLET BOX @ ℄ STA. 15 + 34.5 ± LT.

Scale: 1/2" = 1'-0"

INLET STRUCTURE @ ℄ STA. 15 + 90.4 ± RT.

Scale: 1/2" = 1'-0"

ORIGINAL PLAN	SURVEY PLOTTED BY	DATE
	DRAWN BY	
	TRACED BY	
NOTE BOOK	DESIGNED BY	
No.	QUANTITIES BY	
	CHECKED BY	

STATE OF HAWAII
DEPARTMENT OF TRANSPORTATION
HIGHWAYS DIVISION

IRRIGATION DETAILS

HALEAKALA HIGHWAY

Hana Highway to Vicinity of Haliimaile Road

F.A.P. Proj. No. F-037-1(7)

Scale: As Noted Date: Feb. 7, 1972

SHEET No. 7 OF 13 SHEETS

FED. ROAD DIST. NO.	STATE	FED. AID PROJ. NO.	FISCAL YEAR	SHEET NO.	TOTAL SHEETS
HAWAII	HAW.	F-037-1(7)	1972	32	113

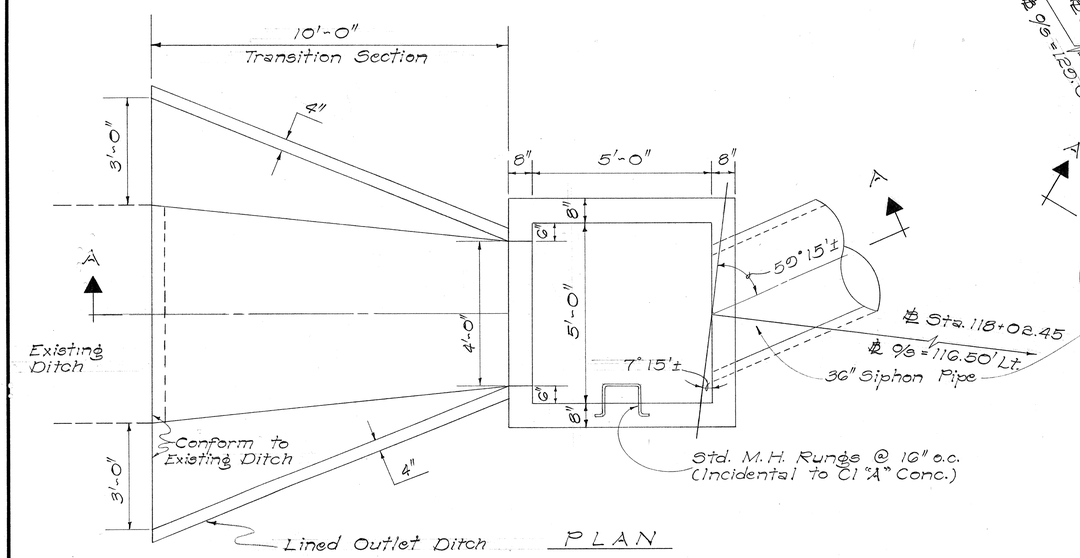

PLAN

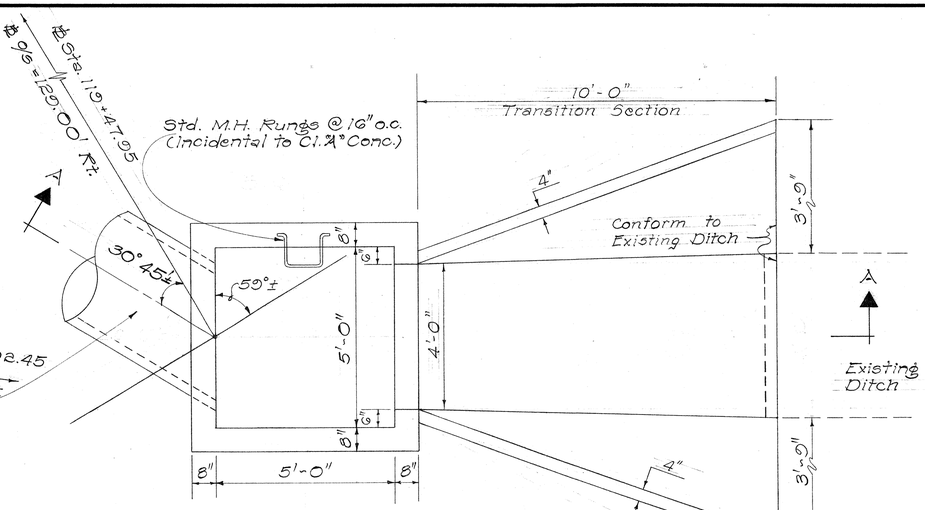

PLAN

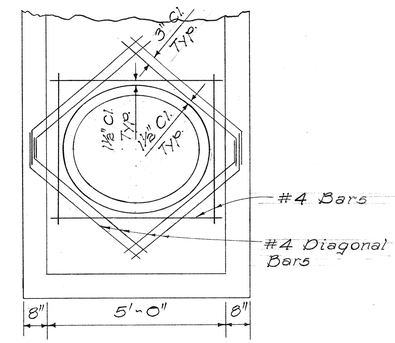

TYPICAL SECTION FOR ADD'L. REINF. @ SIPHON OPENINGS

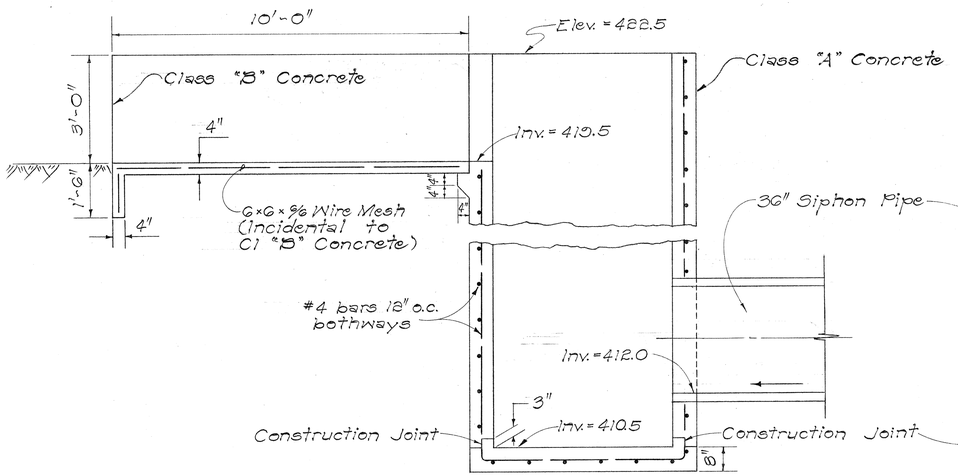

SECTION "A-A"

SIPHON OUTLET BOX @ ℄ STA. 118+02.45

Scale: ½" = 1'-0"

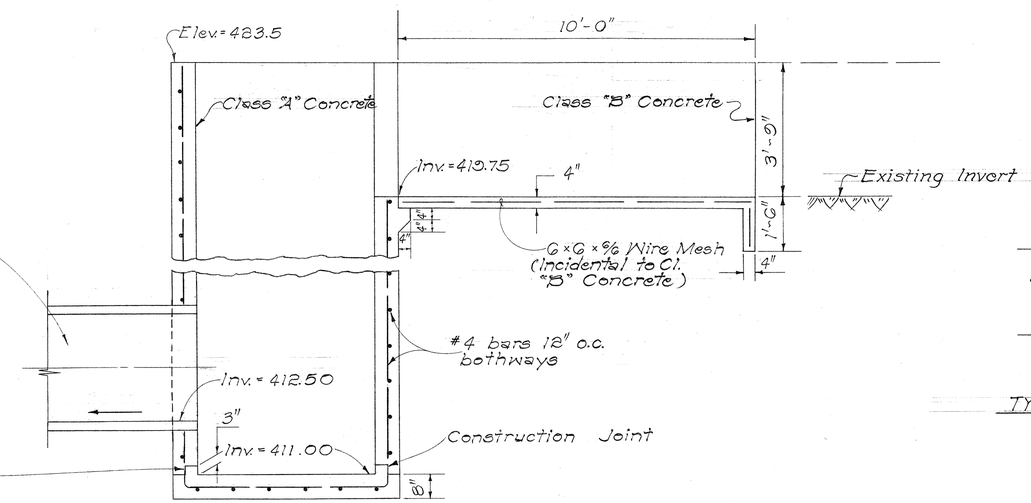

SECTION "A-A"

SIPHON INLET BOX @ ℄ STA. 119+47.95

Scale: ½" = 1'-0"

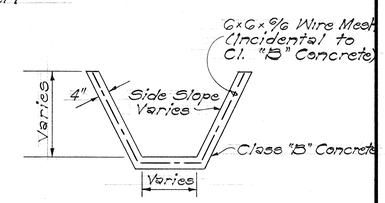

TYPICAL FOR TRANSITION SECTION

Scale: ½" = 1'-0"

ORIGINAL PLAN	SURVEY PLOTTED BY	DATE
	DRAWN BY	"
	TRACED BY	"
NOTE BOOK	DESIGNED BY	"
No.	QUANTITIES BY	"
	CHECKED BY	"

STATE OF HAWAII
DEPARTMENT OF TRANSPORTATION
HIGHWAYS DIVISION

IRRIGATION DETAILS

HALEAKALA HIGHWAY

Hana Highway to Vicinity of Haleakala Road

F.A.P. Proj. No. F-037-1(7)

Scale: As Noted Date: Feb. 7, 1972

SHEET No. 8 OF 13 SHEETS

K+E EASY-ERASE® TRACING PAPER L.A. 3868

32

FED. ROAD DIST. NO.	STATE	FED. AID PROJ. NO.	FISCAL YEAR	SHEET NO.	TOTAL SHEETS
HAWAII	HAW.	F-037-1(7)	1972	33	113

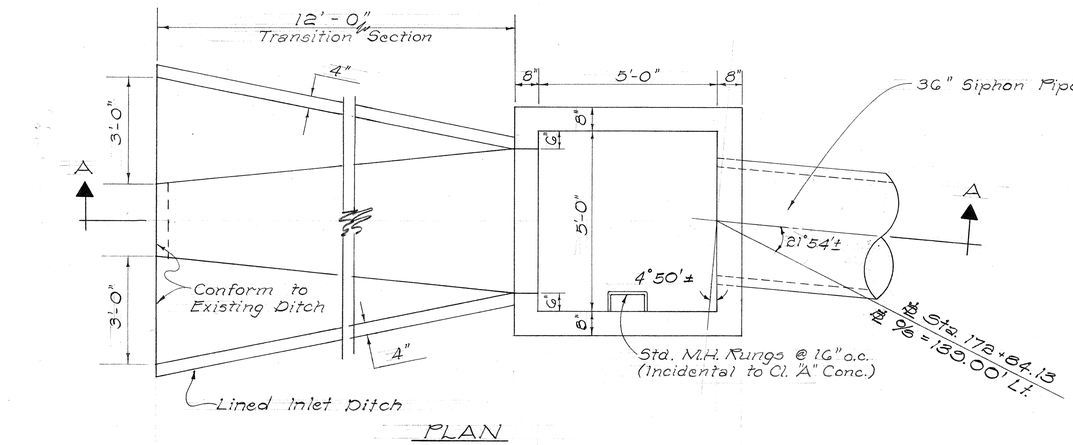

PLAN

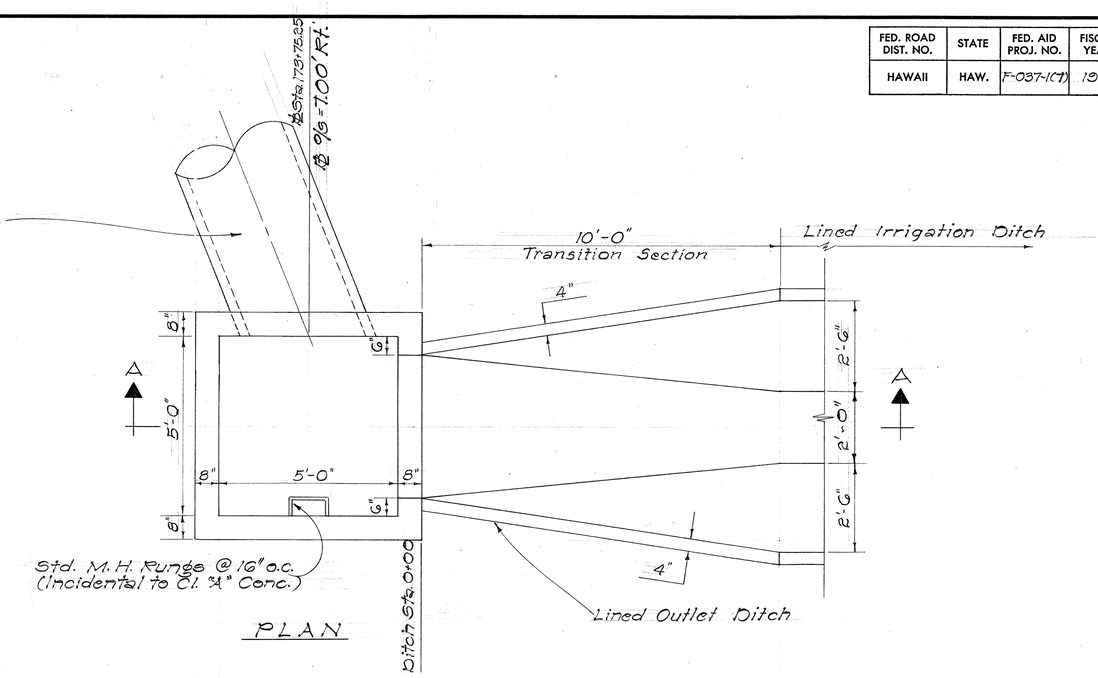

PLAN

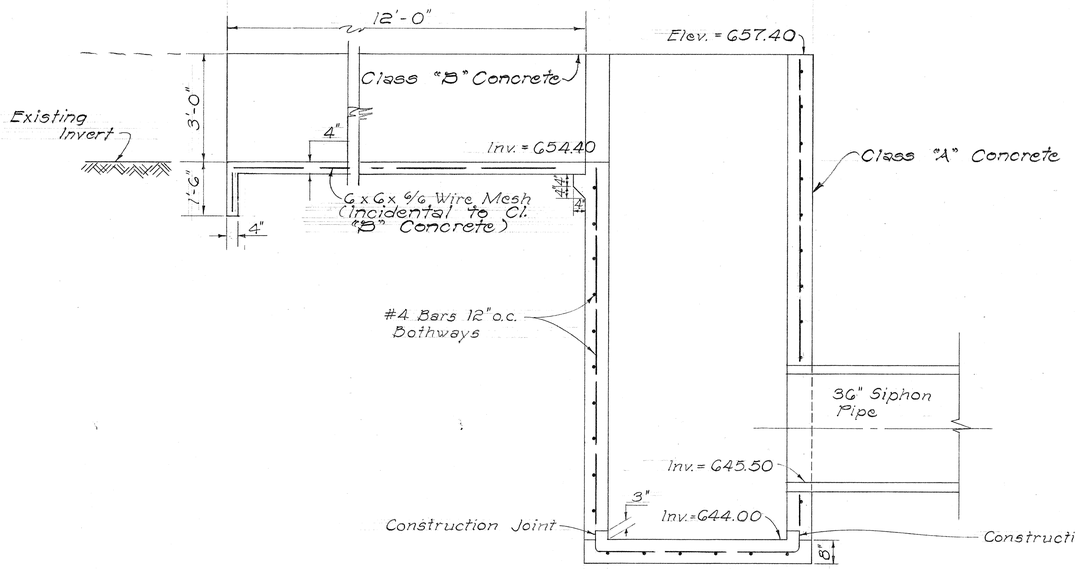

SECTION "A-A"

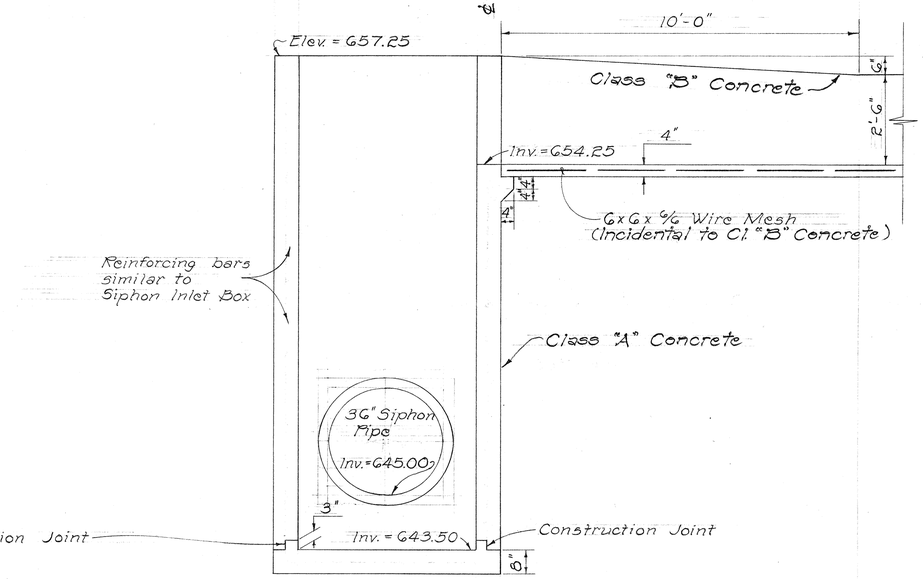

SECTION "A-A"

SIPHON INLET BOX @ ℄ STA. 172+84.13

Scale: 1/8" = 1'-0"

SIPHON OUTLET BOX @ ℄ STA. 173+75.25

Scale: 1/8" = 1'-0"

ORIGINAL PLAN	SURVEY PLOTTED BY	DATE
	DRAWN BY	
	TRACED BY	
NOTE BOOK	DESIGNED BY	
No.	QUANTITIES BY	
	CHECKED BY	

STATE OF HAWAII
DEPARTMENT OF TRANSPORTATION
HIGHWAYS DIVISION

IRRIGATION DETAILS

HALEAKALA HIGHWAY

Hana Highway to Vicinity of Haliimaile Road

F.A.P. Proj. No. F-037-1(7)

Scale: As Noted Date: Feb. 7, 1972

SHEET No. 9 OF 13 SHEETS

K+E CRYSTALEMID LA 3868 TRACING PAPER

FED. ROAD DIST. NO.	STATE	FED. AID PROJ. NO.	FISCAL YEAR	SHEET NO.	TOTAL SHEETS
HAWAII	HAW.	F-037-1(7)	1972	34	113

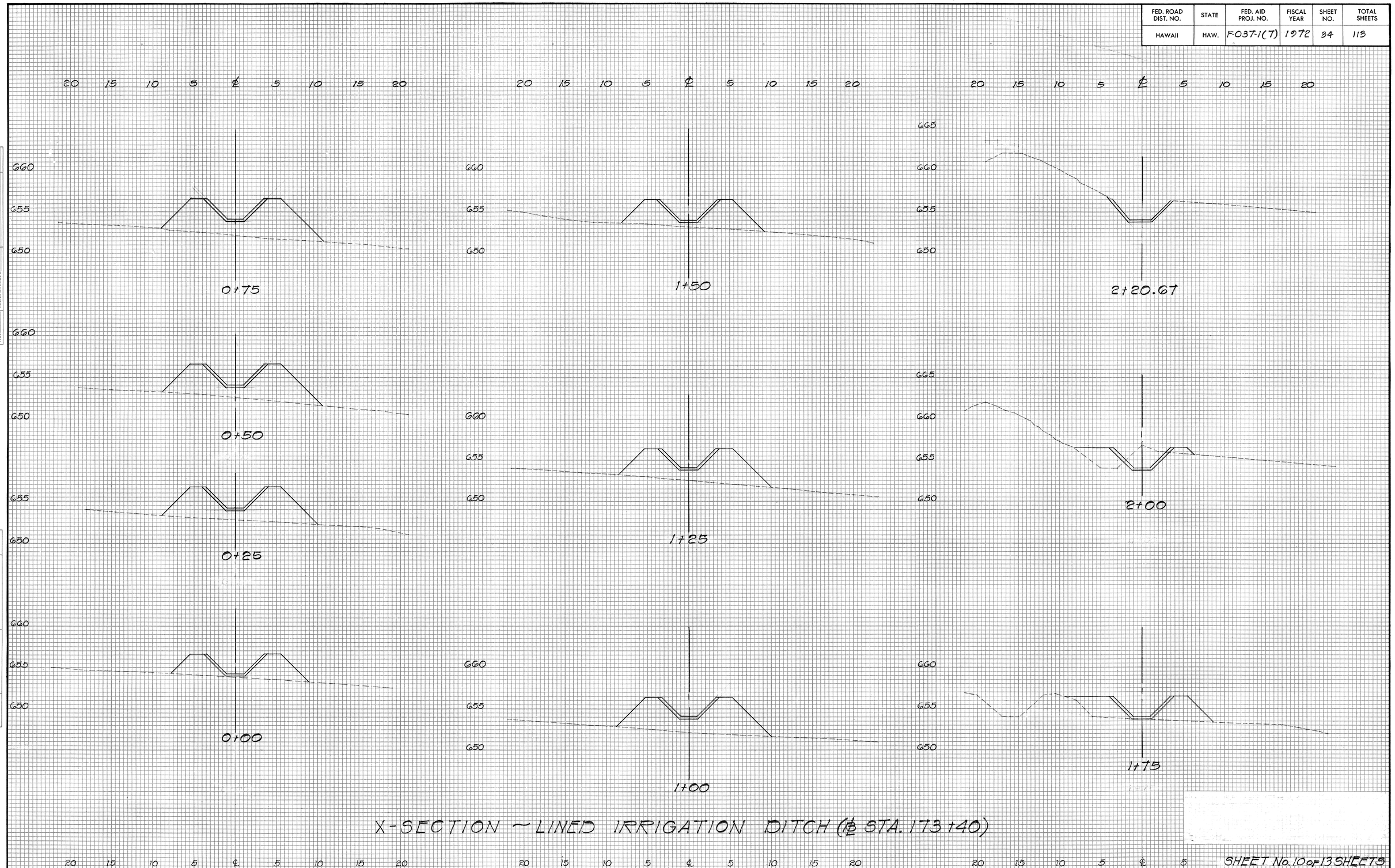

X-SECTION ~ LINED IRRIGATION DITCH (℄ STA. 173+40)

SHEET No. 10 OF 13 SHEETS

FINAL SURVEY		BY	DATE
NOTE BOOK NO.	SURVEYED		
	PLOTTED		
	TEMPLATE		
	AREAS		
	AREAS CHECKED		

ORIGINAL SURVEY		BY	DATE
NOTE BOOK NO.	SURVEYED		
	PLOTTED		
	TEMPLATE		
	AREAS		
	AREAS CHECKED		

PLATE 3 - CROSS SECTION, F.A.S.
CLEARPRINT PAPER CO., S. F. CAL. NO. 1000H-3

FED. ROAD DIST. NO.	STATE	FED. AID PROJ. NO.	FISCAL YEAR	SHEET NO.	TOTAL SHEETS
HAWAII	HAW.	F-037-1(7)	1972	95	113

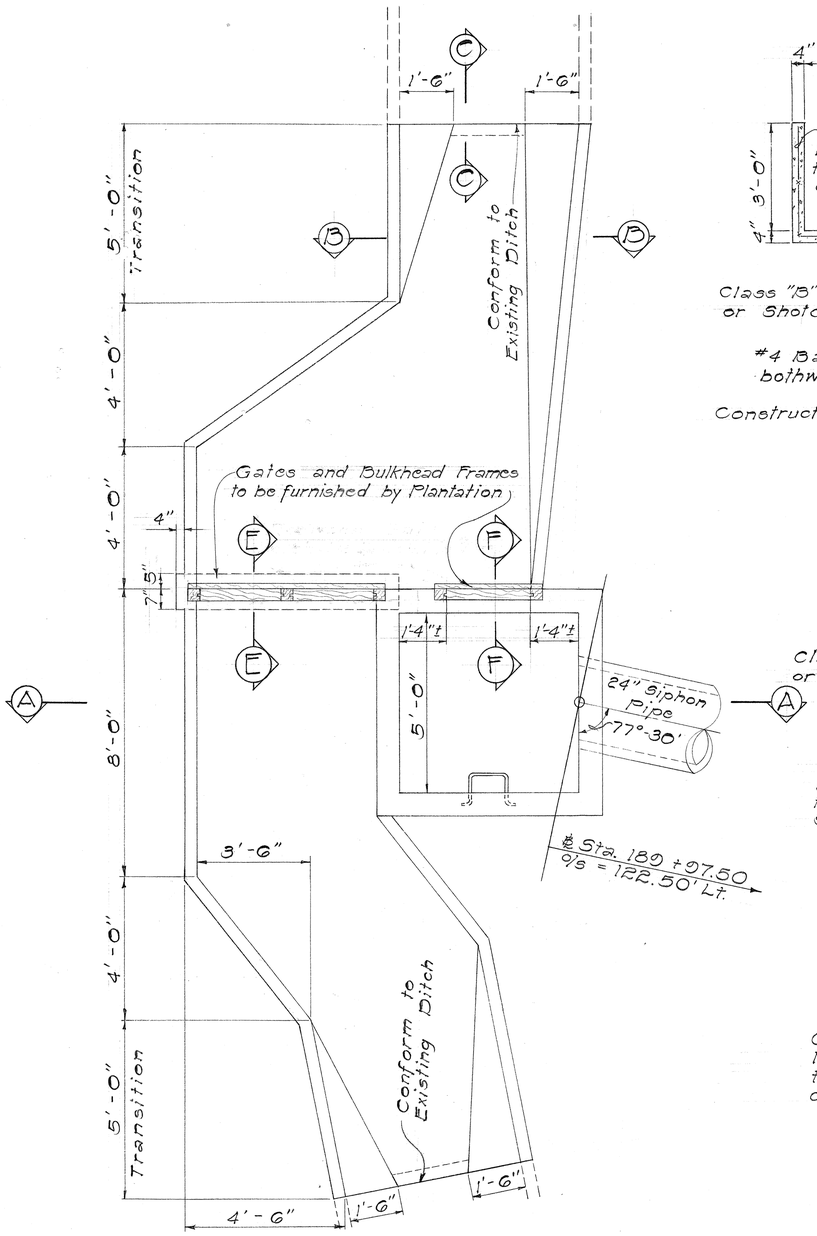

PLAN
(INLET)

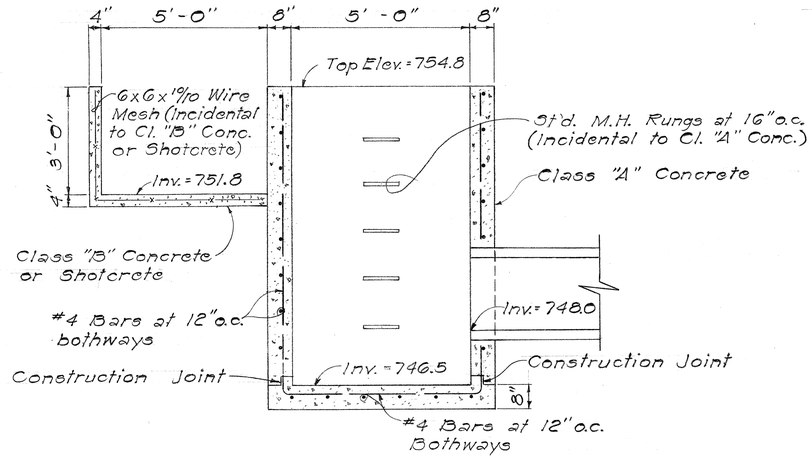

SECTION "A-A"

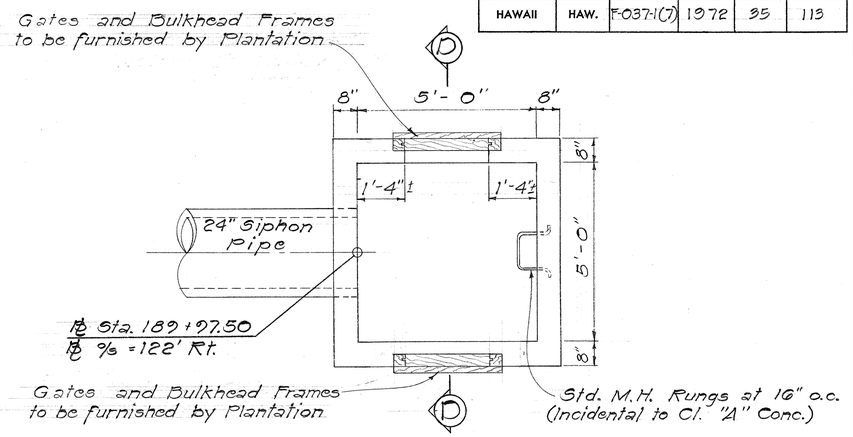

PLAN
(OUTLET)

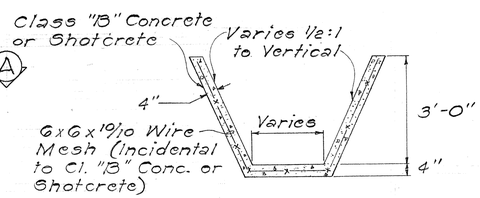

SECTION "B-B"

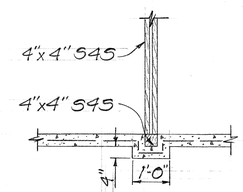

SECTION "E-E"

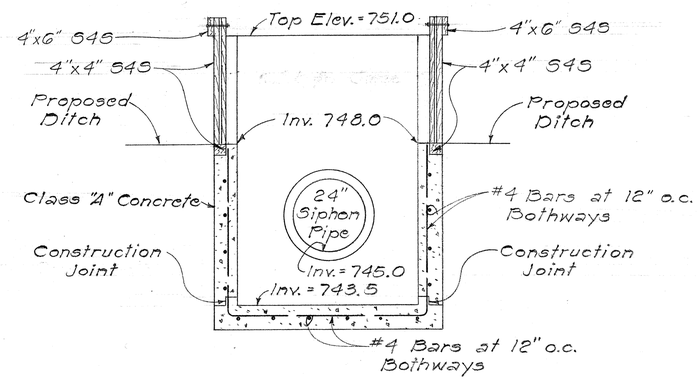

SECTION "D-D"

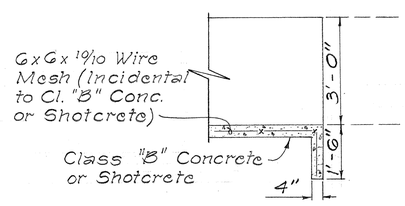

SECTION "C-C"

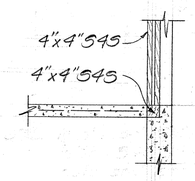

SECTION "F-F"

SIPHON INLET & OUTLET STRUCTURES @ ℄ STA. 189 + 97.50

Scale: 1/2" = 1'-0"

ORIGINAL PLAN	SURVEY PLOTTED BY	DATE
	DRAWN BY	"
	TRACED BY	"
NOTE BOOK	DESIGNED BY	"
	QUANTITIES BY	"
No.	CHECKED BY	"

STATE OF HAWAII
DEPARTMENT OF TRANSPORTATION
HIGHWAYS DIVISION

IRRIGATION DETAILS
HALEAKALA HIGHWAY
Hana Highway to Vicinity of Haliimaile Road
F.A.P. Proj. No. F-037-1 (7)

Scale: As Noted Date: Feb. 7, 1972

SHEET No. 11 OF 13 SHEETS

FED. ROAD DIST. NO.	STATE	FED. AID PROJ. NO.	FISCAL YEAR	SHEET NO.	TOTAL SHEETS
HAWAII	HAW.	F-037-1(7)	1972	36	113

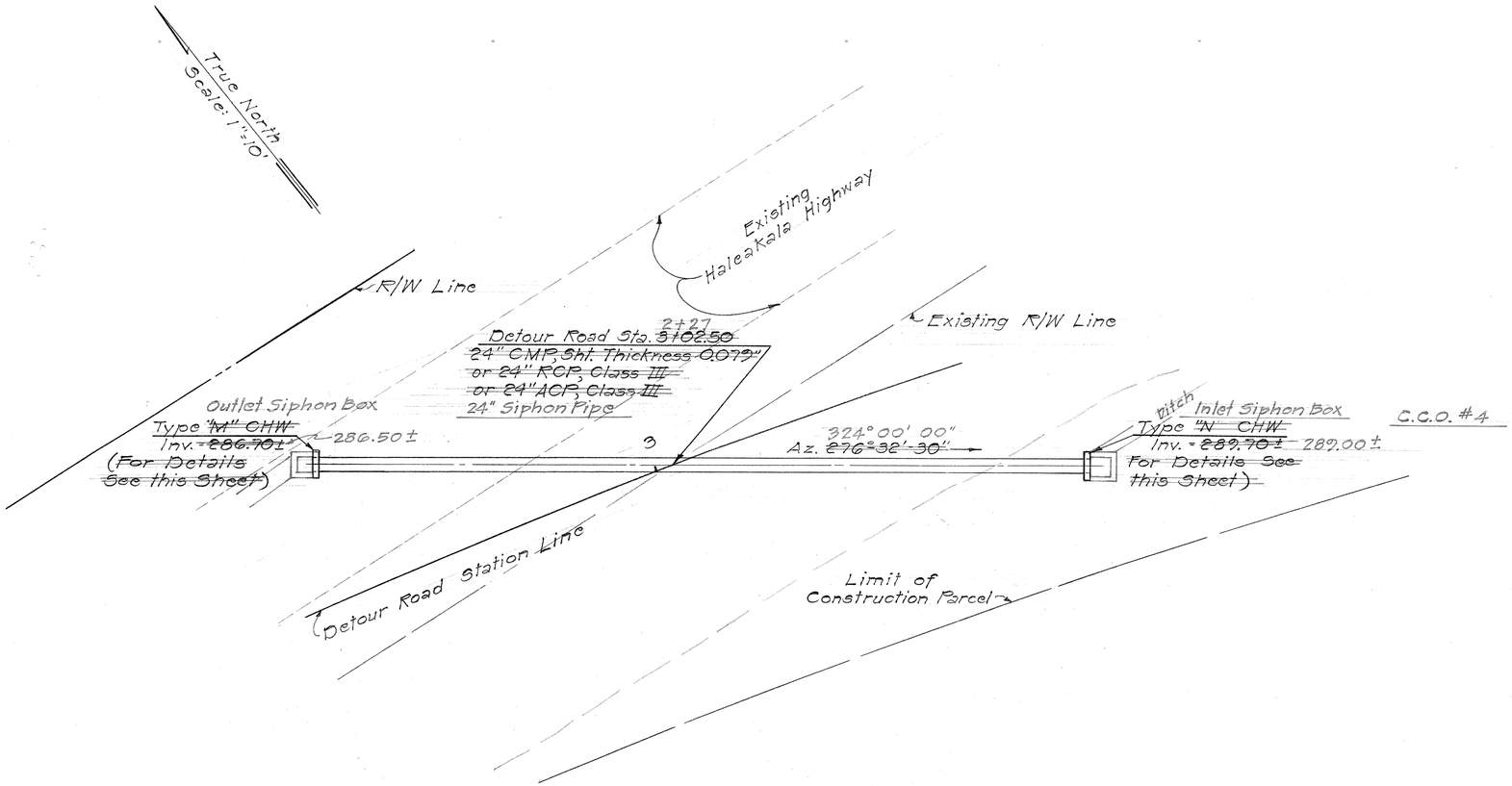

PLAN

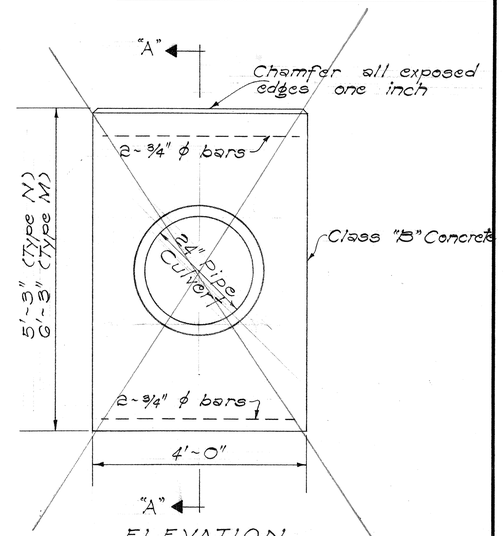

ELEVATION

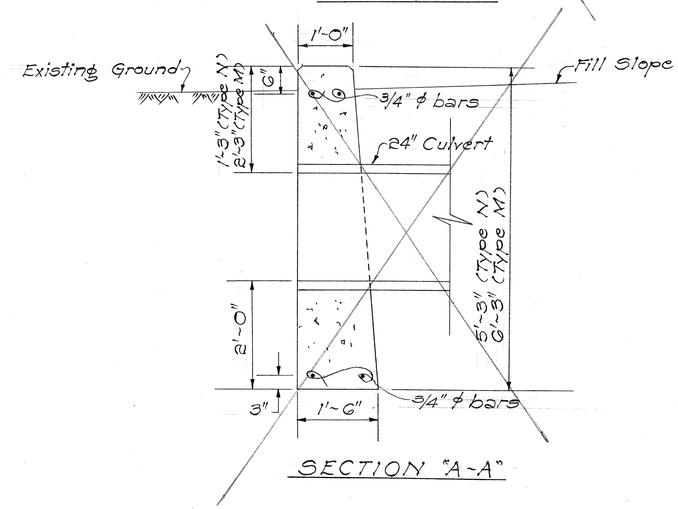

SECTION "A-A"

CONCRETE HEADWALL @ DETOUR RD.
STA. 3+02.50
Not to Scale

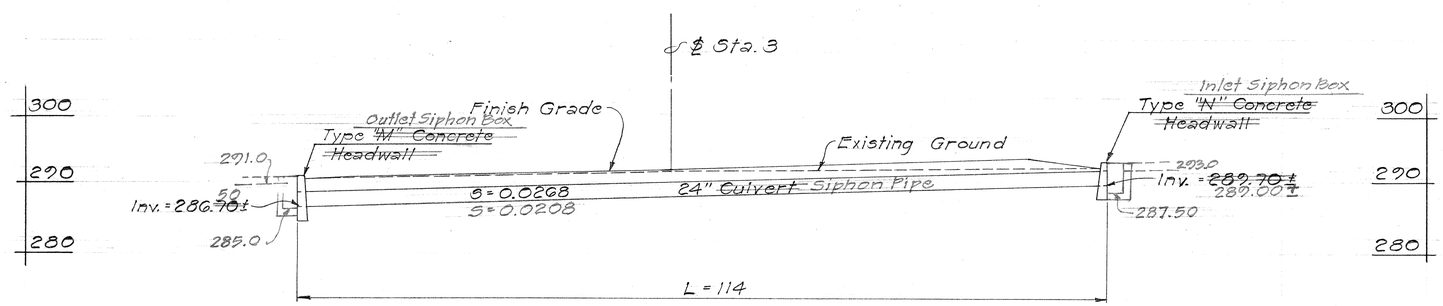

℄ PROFILE – 24" CULVERT AT STA. ~~3+02.50~~ 2+27

Scale: 1" = 10'

ORIGINAL PLAN		DATE
	SURVEY PLOTTED BY	
	DRAWN BY	"
	TRACED BY	"
NOTE BOOK	DESIGNED BY	"
No.	QUANTITIES BY	"
	CHECKED BY	"

STATE OF HAWAII
DEPARTMENT OF TRANSPORTATION
HIGHWAYS DIVISION

IRRIGATION DETAILS
HALEAKALA HIGHWAY
Hana Highway to Vicinity
of Haliimaile Road
F.A.P. Proj. No. F-037-1 (7)
Scale: As Noted Date: Feb. 7, 1972

SHEET No. 12 OF 13 SHEETS

K+E CRYSTALENE® TRACING PAPER L.A. 3988

FED. ROAD DIST. NO.	STATE	FED. AID PROJ. NO.	FISCAL YEAR	SHEET NO.	TOTAL SHEETS
HAWAII	HAW.	F-037-1(7)	1972	37	113

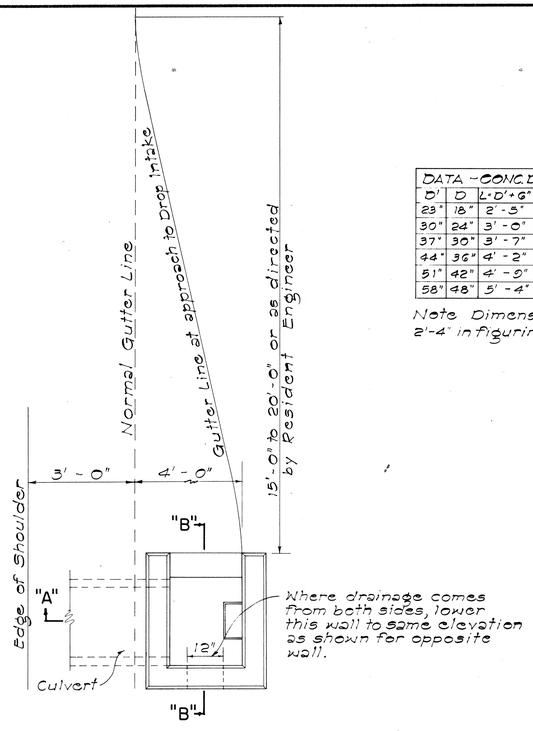

PLAN

DATA - CONC. DROP INTAKE					Where Variable Equals
D'	D	L=D'+6"	S	Cu. Yds.	
23"	18"	2'-5"	8"	1.41	4'-6"
30"	24"	3'-0"	8"	1.72	5'-0"
37"	30"	3'-7"	9"	2.32	5'-6"
44"	36"	4'-2"	9"	2.73	6'-0"
51"	42"	4'-9"	10"	3.54	6'-6"
58"	48"	5'-4"	10"	4.01	7'-0"

Note Dimension "X" is assumed as 2'-4" in figuring the above quantities.

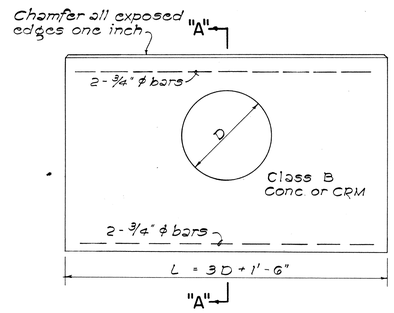

ELEVATION

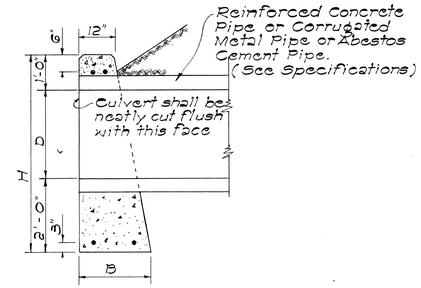

SECTION "A-A"

DATA FOR CONC. HEADWALL				Cl B CONC FOR R C P Cu. Yd.	Cl B CONC FOR C M P Cu. Yd.	Steel For One Headwall			
D	B	L	H			No. of Bars	Size	Length	Lbs.
18"	1'-6"	6'-0"	4'-6"	1.12	1.17	4	3/4" ϕ	5'-6"	33
24"	1'-6"	7'-6"	5'-0"	1.52	1.60	4	3/4" ϕ	7'-0"	42
30"	2'-0"	9'-0"	5'-6"	2.36	2.49	4	3/4" ϕ	8'-6"	51
36"	2'-0"	10'-6"	6'-0"	2.94	3.13	4	3/4" ϕ	10'-0"	60
42"	2'-6"	12'-0"	6'-6"	4.19	4.47	4	3/4" ϕ	11'-6"	69
48"	2'-6"	13'-6"	7'-0"	5.01	5.36	4	3/4" ϕ	13'-0"	78

DATA - MASONRY HEADWALL				CRM FOR R C P Cu Yd.	CRM FOR C M P Cu Yd.
D	B	L	H		
18"	1'-9"	6'-0"	4'-6"	1.24	1.29
24"	2'-0"	7'-6"	5'-0"	1.83	1.92
30"	2'-3"	9'-0"	5'-6"	2.56	2.70
36"	2'-6"	10'-6"	6'-0"	3.45	3.66

DETAIL OF HEADWALL

Scale: 1/2" = 1'-0"

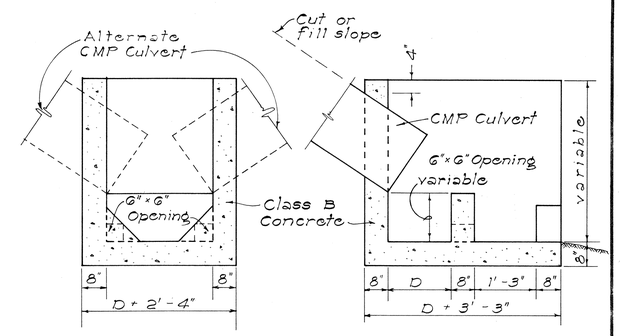

SECTION "C-C" SECTION "D-D"

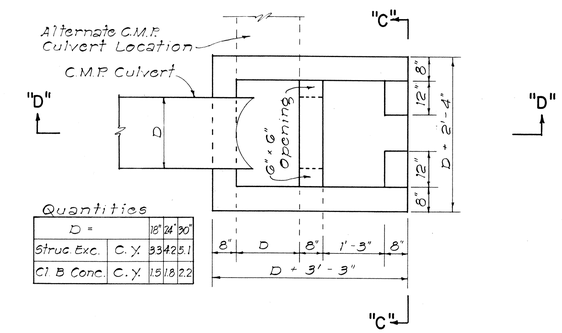

Quantities

D =		18"	24"	30"
Struc Exc.	C.Y.	33	42	51
Cl B Conc.	C.Y.	15	18	22

PLAN

DETAILS OF CONC. DROP BOX AT OUTLET OF CULVERT PIPE

NOT TO SCALE

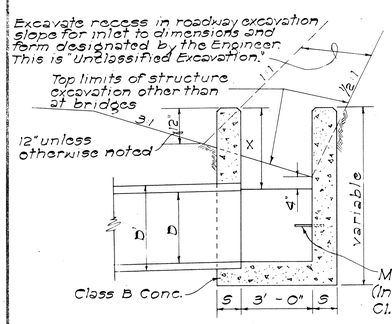

SECTION "A-A"

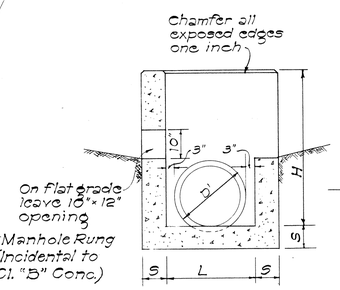

SECTION "B-B"

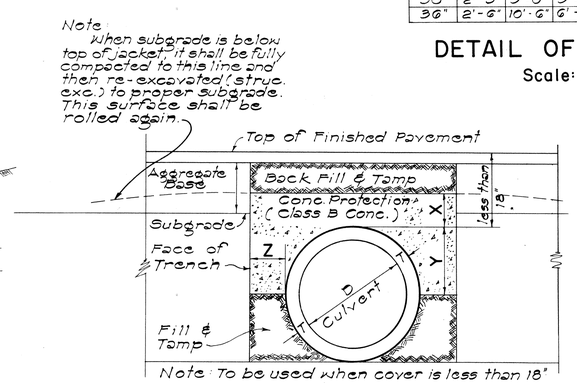

DETAIL OF CONCRETE DROP INTAKE

Scale: 1/2" = 1'-0"

GENERAL NOTES

1. Culvert shall enter and leave Drop Intake from any position and in the direction indicated by the plans or ordered by the Engineer.
2. D' shall be the maximum outside dimension of the culvert at the Drop Intake wall.
3. Manhole Rungs (16" o.c.) are required when "H" is greater than 4 feet 6 inches. Only one rung (12 inches from the bottom) is required if "H" is 4 feet 6 inches or less. Manhole Rungs maybe placed at any location as ordered by the Engineer.

DATA FOR CONCRETE PROTECTION OVER CULVERTS		
X	Y	Z
6" for 18" D	$\frac{D}{2a} + T$	Z must be from pipe to face of trench
7" for 24" D		
8" for 30" D		Minimum = X
9" for 36" D		
10" for 42" D		Maximum pay quantity will be Z = 12"
11" for 48" D		
12 for 54" D		

SECT. OF CULVERT WITH CONC. PROTECTION

Scale: 1" = 1'-0"

APPROVAL RECOMMENDED:

G. Yakano — HYDRAULIC DESIGN ENGINEER — DATE 12-17-69

APPROVED:

Shirley Sadoi — ASSISTANT CHIEF, ENGINEERING — DATE 12-17-69

NO.	REVISION	APPROVED BY	DATE

STATE OF HAWAII
DEPARTMENT OF TRANSPORTATION
HIGHWAYS DIVISION

STANDARD DETAILS

DROP INTAKE, HEADWALL & CONCRETE PROTECTION

Scale: As Noted — Date: Aug. 1967

SHEET No. 13 OF 13 SHEETS — DH 10

ORIGINAL PLAN	SURVEY PLOTTED BY	DATE
	DRAWN BY	"
	TRACED BY	"
	DESIGNED BY	"
NOTE BOOK	QUANTITIES BY	"
No.	CHECKED BY	"