FED. ROAD DIST. NO.	STATE	FEDERAL AID PROJ. NO.	FISCAL YEAR	SHEET NO.	TOTAL SHEETS
HAWAII	HAW.	HWY-M-01-08	2010	16	17

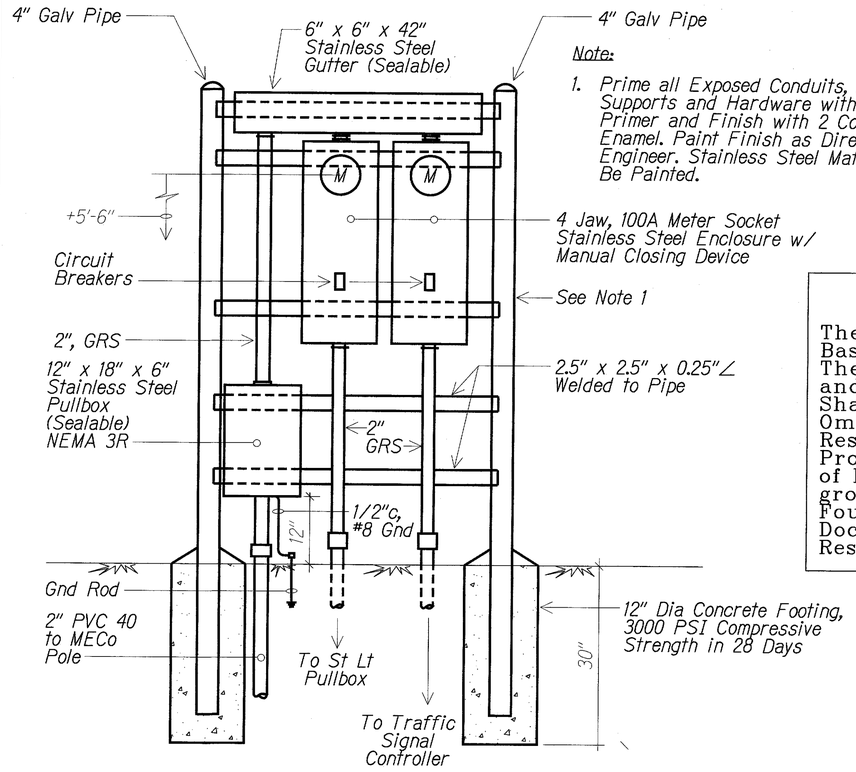

Note:

1. Prime all Exposed Conduits, Pipes, Mounting Supports and Hardware with a 2-Part Epoxy Primer and Finish with 2 Coats of Urethane Enamel. Paint Finish as Directed by the Engineer. Stainless Steel Materials Need Not Be Painted.

SERVICE EQUIPMENT ELEVATION

A E-1 | E-4 NTS

LEGEND FOR AS-BUILT POSTINGS

∿∿∿	Squiggly line for as-built deletion
~~100.00~~	Double line for as-built deletion
Roadway	Text for as-built posting

"AS-BUILT"

These Record Drawings Have Been Prepared Based on information Provided by Others. The Consultant has not Verified the Accuracy and/or Completeness of this Information and Shall Not be Responsible for any Errors or Omissions that May be Incorporated as a Result of Incomplete or Erroneous Information Provided by Others. Furthermore, the Method of Installation for the Street Light Underground Duct Lines and Light Standard Concrete Foundations Differs from the Construction Documents and the Consultant Shall Not be Responsible for These Design Deviations.

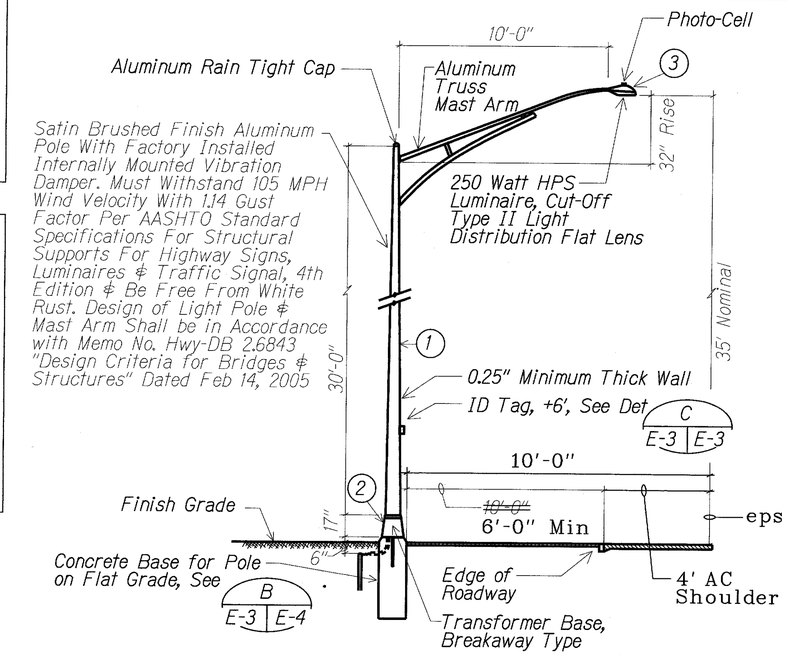

STREET LIGHT STANDARD DETAIL

B E-1 | E-4 NTS

E-2

MATERIAL LIST

ITEM	DESCRIPTION	MANUFACTURER
1	Light Pole, 30', Alum	
2	Transformer Base (Alum) (Breakaway Type)	
3	Luminaire, 250W HPS	

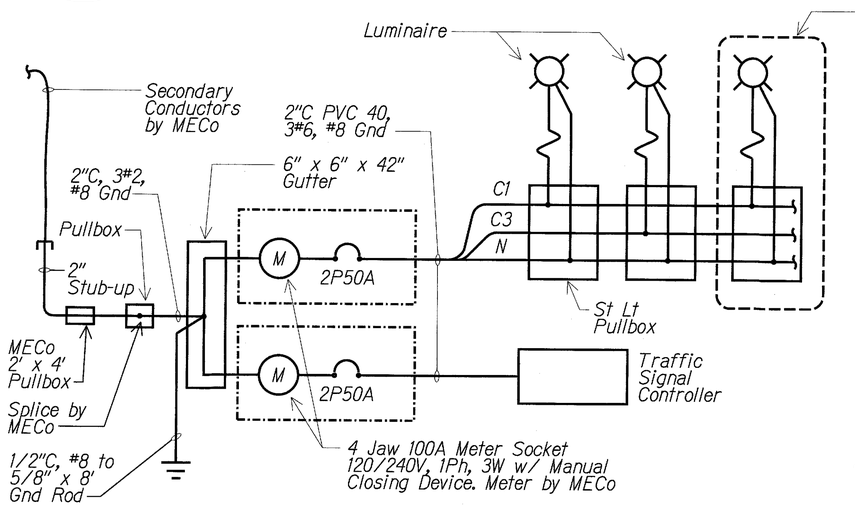

ONE-LINE DIAGRAM

No Scale

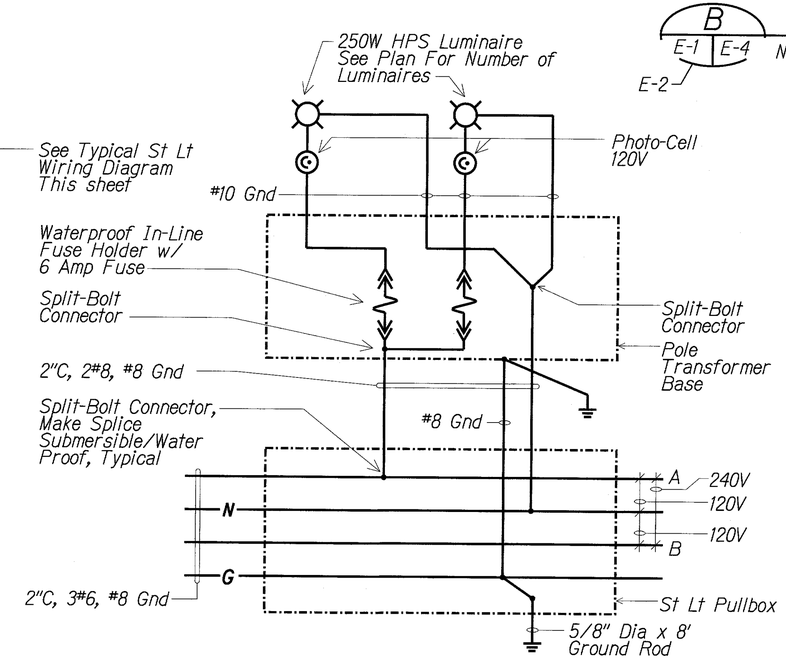

TYPICAL STREET LIGHT WIRING DIAGRAM

No Scale

ORIGINAL PLAN	SURVEY PLOTTED BY	DATE
	DRAWN BY	
	TRACED BY	
	DESIGNED BY	
SCOTT BOGE	QUANTITIES BY	
	CHECKED BY	
No.		

RUSSELL K. MORIOKA LICENSED PROFESSIONAL ENGINEER No. 9013-E HAWAII, U.S.A. 8/5/10

MK ENGINEERS, LTD.
LICENSE EXPIRATION DATE: 4/30/12
THIS WORK WAS PREPARED BY ME OR UNDER MY SUPERVISION.

STATE OF HAWAII
DEPARTMENT OF TRANSPORTATION
HIGHWAYS DIVISION

STREET LIGHT STANDARD DETAILS & DIAGRAM

HANA HIGHWAY
TRAFFIC OPERATIONAL INPROVEMENTS AT WAKEA AVENUE
Project No. HWY-M-01-08

Scale: As Noted Date: May 2010

SHEET No. E-4 OF 5 SHEETS