FED. ROAD DIST. NO.	STATE	FED. AID PROJ. NO.	FISCAL YEAR	SHEET NO.	TOTAL SHEETS
HAWAII	HAW.	BR-036-1(15)	2000	7	89

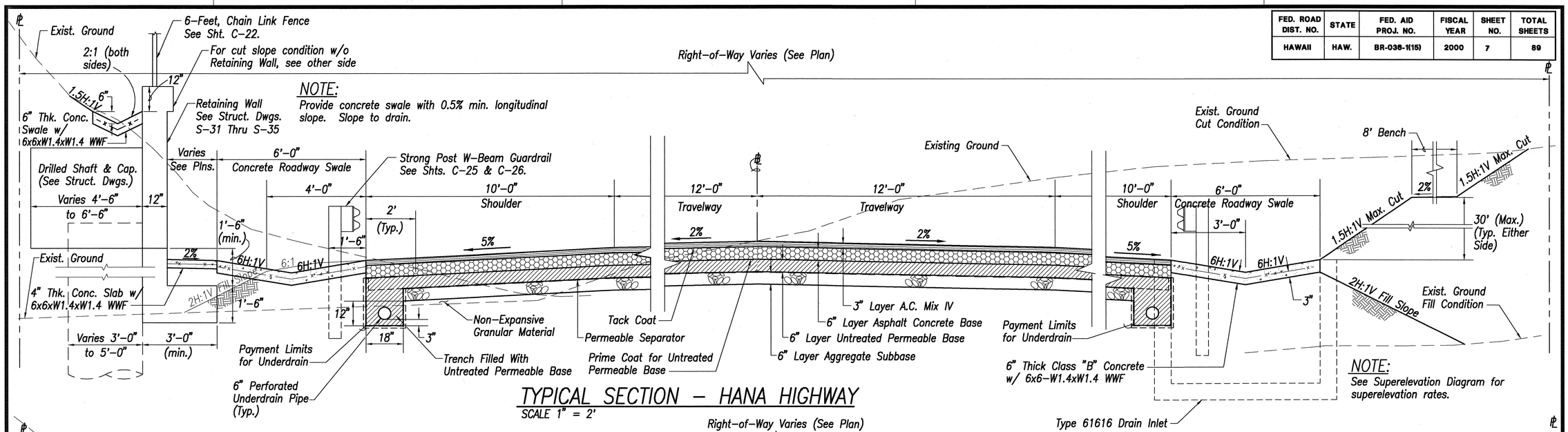

NOTE:
Provide concrete swale with 0.5% min. longitudinal slope. Slope to drain.

NOTE:
See Superelevation Diagram for superelevation rates.

TYPICAL SECTION - HANA HIGHWAY

SCALE 1" = 2'

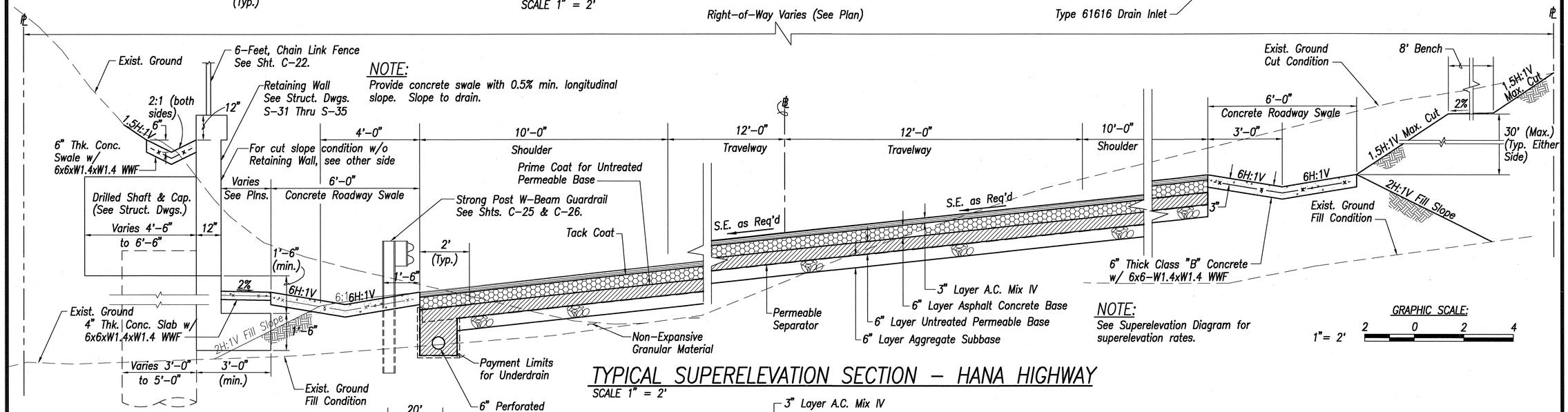

NOTE:
See Superelevation Diagram for superelevation rates.

GRAPHIC SCALE:
1"= 2' 2 0 2 4

TYPICAL SUPERELEVATION SECTION - HANA HIGHWAY

SCALE 1" = 2'

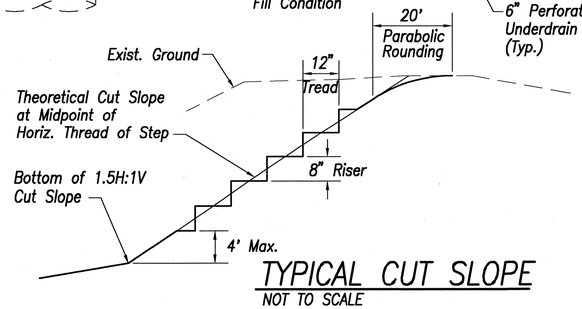

TYPICAL CUT SLOPE

NOT TO SCALE

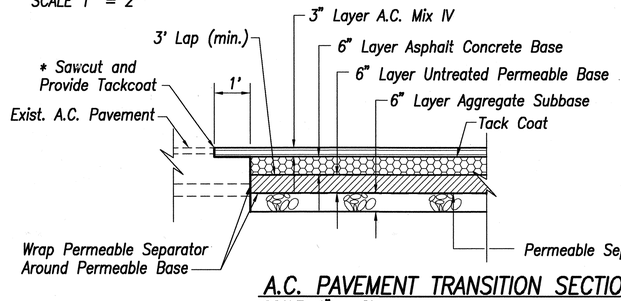

A.C. PAVEMENT TRANSITION SECTION

SCALE: 1" = 2'

* SAWCUT NOTE:
Sawcut and remove all asphalt treated materials. Level and compact untreated base. Reconstruct with new asphalt concrete base course and A.C. Mix IV.

CRAIG W. L. LUKE
LICENSED PROFESSIONAL ENGINEER
No. 6933-C
HAWAII, U.S.A.

THIS WORK WAS PREPARED BY ME OR UNDER MY SUPERVISION.

SIGNATURE 7/21/00 DATE

STATE OF HAWAII
DEPARTMENT OF TRANSPORTATION
HIGHWAYS DIVISION

TYPICAL SECTIONS

HANA HIGHWAY
REPLACEMENT OF KAUPAKULUA BRIDGE AND APPROACHES
F.A.P. Proj. No. BR-036-1(15)

Scale: 1" = 2' Date: June 30, 2000

SHEET No. C-5 OF 89 SHEETS

ORIGINAL PLAN | SURVEY PLOTTED BY | DRAWN BY | TRACED BY | DESIGNED BY | QUANTITIES BY | CHECKED BY | DATE | NOTE BOOK No.