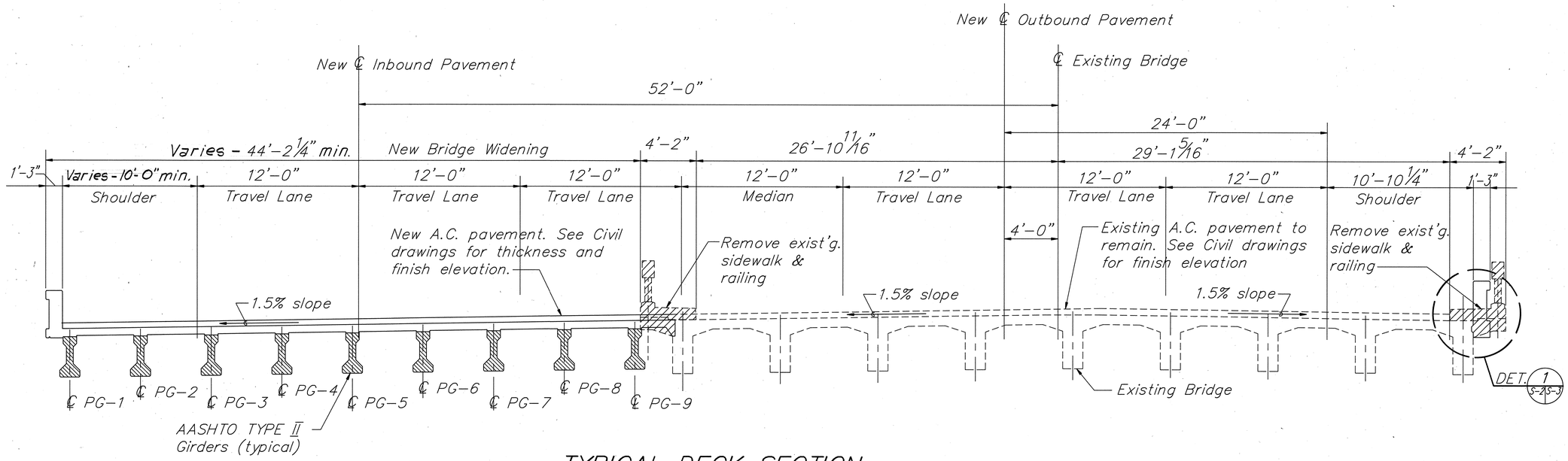

TYPICAL DECK SECTION

Scale: 1/4" = 1'-0"

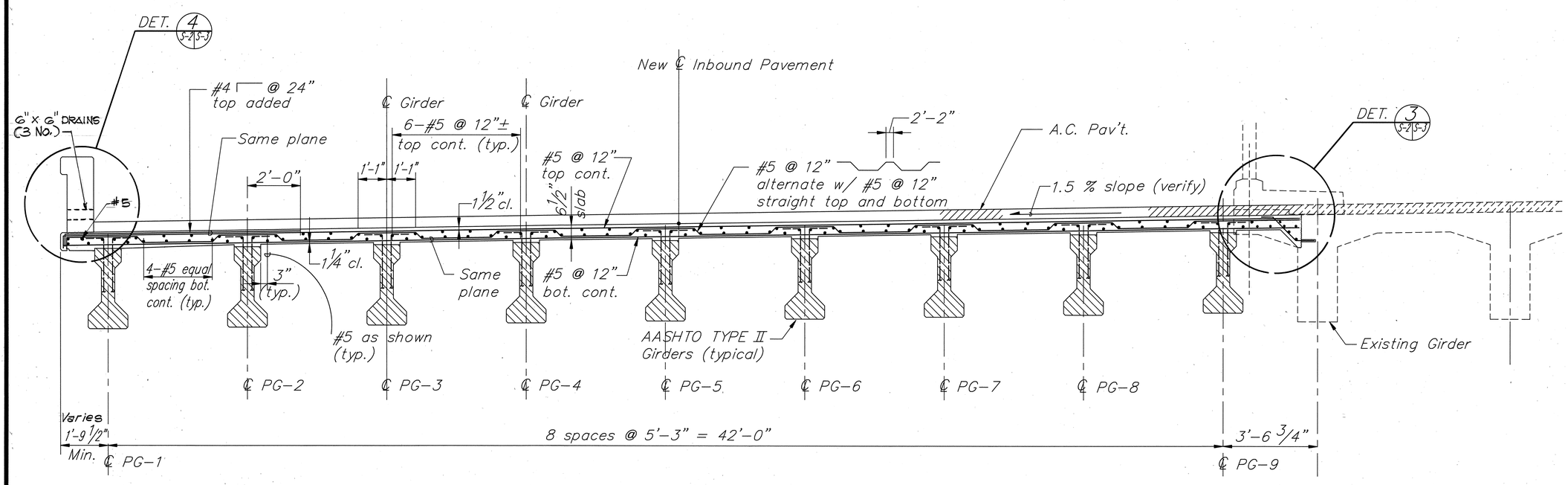

NORMAL DECK SECTION

Scale: 1/2" = 1'-0"

Airports Division
DEPARTMENT OF TRANSPORTATION
STATE OF HAWAII

HAROLD TAKASHI MIYAMOTO
REGISTERED PROFESSIONAL ENGINEER
No. 1514-S
HAWAII, U.S.A.

THIS WORK WAS PREPARED BY ME OR UNDER MY SUPERVISION

DSGN.	DRWN.	CHKD.	APPD.
L.S	F.G	V.C	H.T.M

KEY PLAN / NOTES :

NO.	DATE	REVISIONS

RECORD DRAWINGS

This record drawing has been prepared, in part, based upon information furnished by others. The Engineer is thus not responsible for the accuracy of this record drawing or for any errors or omissions which may have been incorporated into it as a result.

Date: July 12, 1991

PROJECT TITLE :

HANA HIGHWAY IMPROVEMENTS

PROJECT NO. :

STATE PROJ. NO. AM-1061-12
AIP PROJ. NO. 3-15-0006-11

SHEET TITLE :

TYPICAL & NORMAL DECK SECTION

DATE : 10-3-89

DWG. NO. : S-2