FED. ROAD DIST. NO.	STATE	FED. AID PROJ. NO.	FISCAL YEAR	SHEET NO.	TOTAL SHEETS
HAWAII	HAW.	NH-STP-032-1(6)	2000	4	53

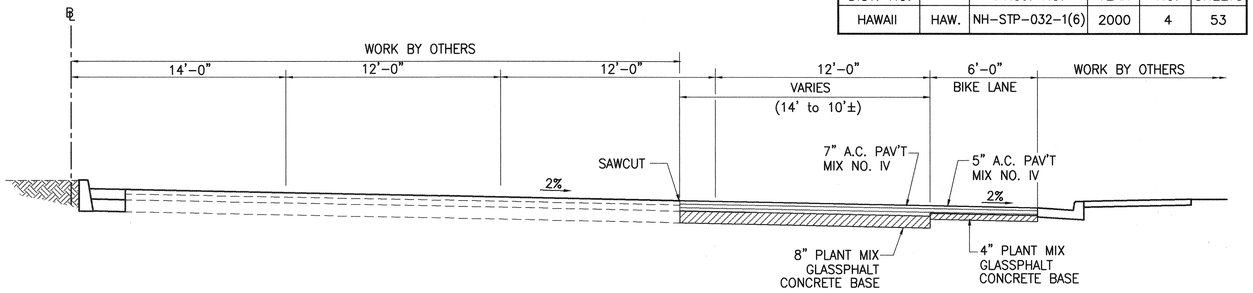

KAAHUMANU AVE. ℄ STA. 62+65 TO 66+60

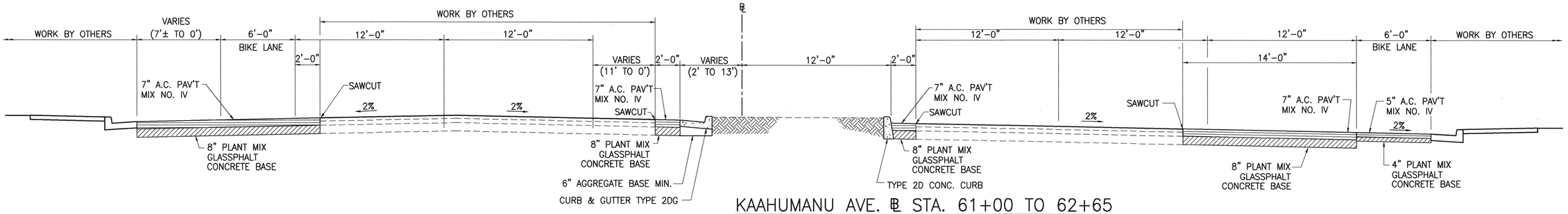

KAAHUMANU AVE. ℄ STA. 61+00 TO 62+65

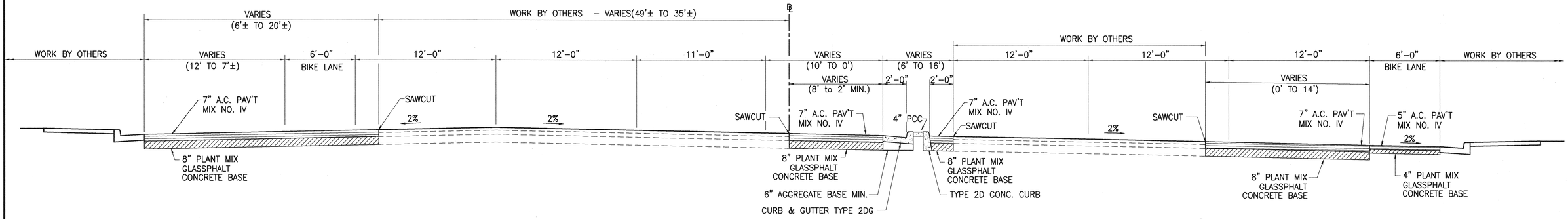

KAAHUMANU AVE. ℄ STA. 56+25 TO 61+00

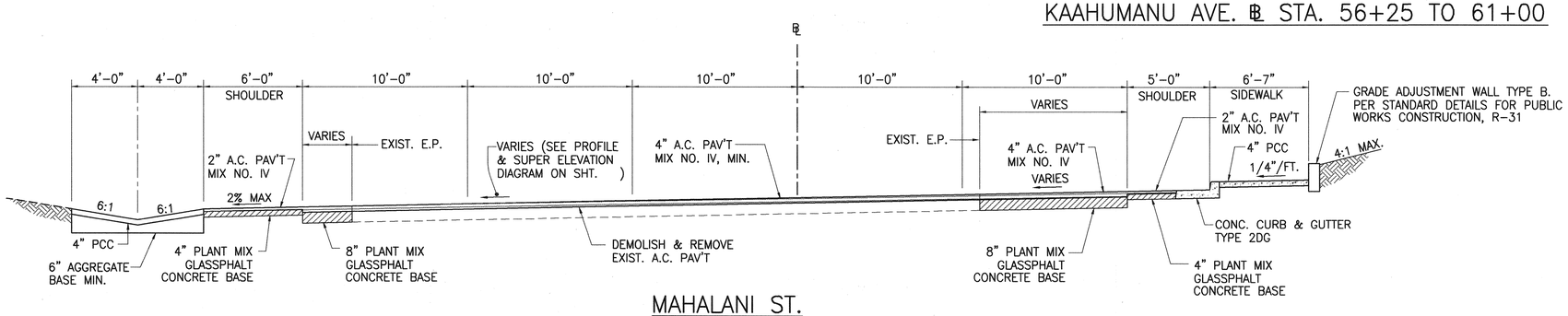

MAHALANI ST.

TYPICAL ROAD SECTIONS

SCALE: 1/4"= 1'-0"

THEODORE S. KAWAHIGASHI
LICENSED PROFESSIONAL ENGINEER
No. 3244-C
HAWAII, U.S.A.

THIS WORK WAS PREPARED BY ME OR UNDER MY SUPERVISION

Theodore S. Kawahigashi
Signature

STATE OF HAWAII
DEPARTMENT OF TRANSPORTATION
HIGHWAYS DIVISION

TYPICAL ROAD SECTIONS

KAAHUMANU AVENUE
TRAFFIC SIGNAL MODERNIZATION
HIGH STREET TO WHARF STREET
FEDERAL AID PROJECT NO. NH-STP-032-1(6)

SCALE: AS NOTED DATE: AUG. 1999

SHEET No. 1 OF 1 SHEETS