FED. ROAD DIST. NO.	STATE	FED. AID PROJ. NO.	FISCAL YEAR	SHEET NO.	TOTAL SHEETS
HAWAII	HAW.	NH-030-1(35)R	2006	31	79

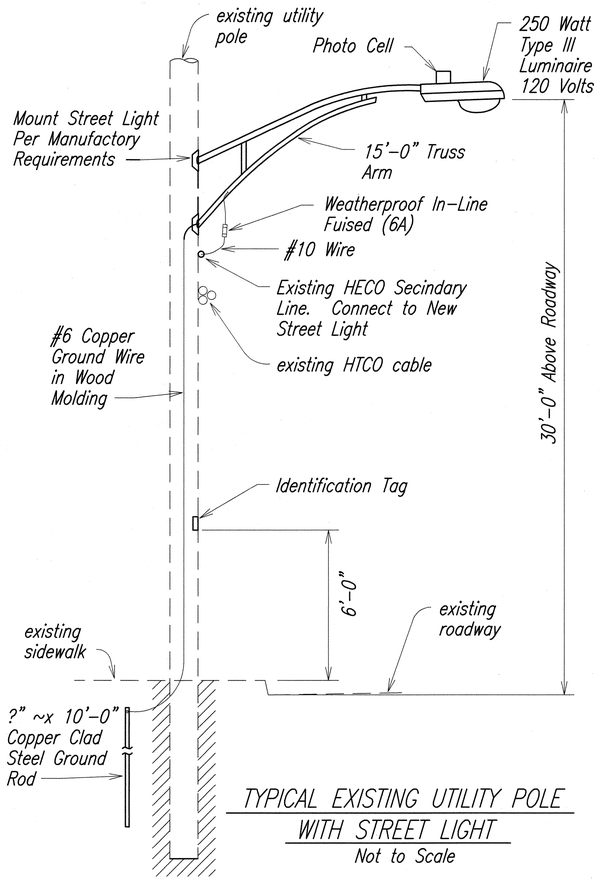

TYPICAL EXISTING UTILITY POLE WITH STREET LIGHT

Not to Scale

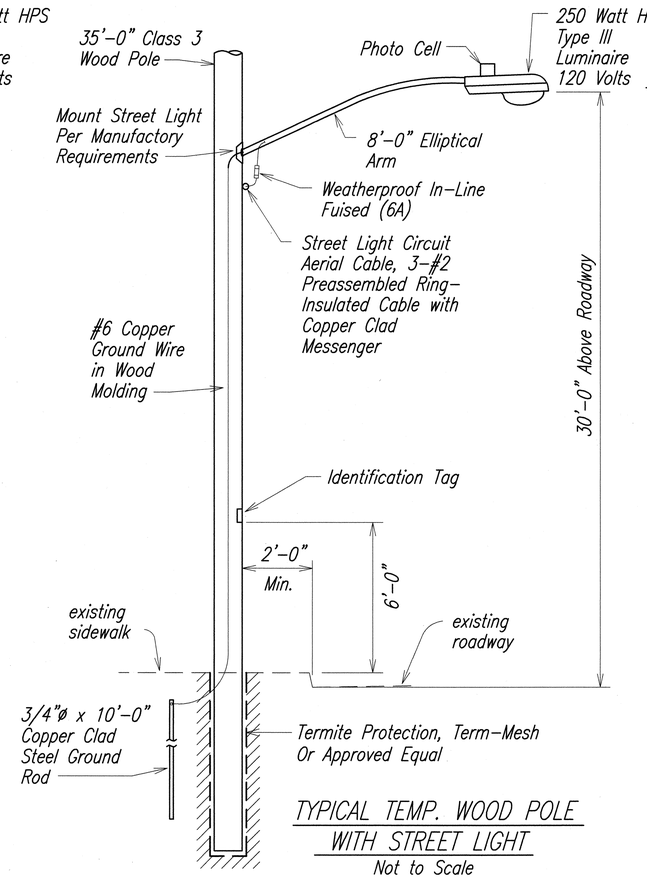

TYPICAL TEMP. WOOD POLE WITH STREET LIGHT

Not to Scale

ITEM NO.	DESCRIPTION
1.	Luminaire 250 W HPS and Bracket as Shown
2.	Concrete Deadman 1'-6"ø with Galv. Sq. Washer
3.	In Line Fuse Holder with 6A Fuse
4.	Wire #10 AWG Stranded Copper, Type RHW Black
5.	Wire #10 AWG Stranded Copper, Type RHW Red
6.	In Line Unfused, Insulated Separable Connector
7.	Guy Wire Guard, Galv.
8.	Thimble Clevis with Eyelet
9.	Wires, 2-#2 XHHW Copper with Copper Clad Messenger
10.	Preformed Guy Grip
11.	Guy Wire, 3/8" EHS, Galv.
12.	Anchor Guy Hook with 3/4"ø Thru Bolt & 2 1/2" Sq. Washer
13.	Messenger Hanger, 3/4"ø Thru & 2 1/2" Sq. Washer
14.	Insulator, Porcelain
15.	Lag Screw (Size As Required)
16.	3/4"ø Galv. Thru Bolt with 2 1/2" Sq. Galv. Washer (Length as Required)
17.	Performed Deadened
18.	Anchor Rod 1"øx8'-0" Copper Clad

Note:
All Hardware shall be Hot Dipped Galv. Steel

ANCHOR ROD & DEADMAN DIM.		
"L" C Pole to Anchor Rod Eye	"W" C Hole to Anchor Rod Eye	"D" Vertical Depth
20'-0"	4'-8"	5'-6"
15'-0"	4'-0"	6'-1"
10'-0"	3'-0"	6'-7"
5'-0"	1'-8"	7'-1"

TRENCH PLAN

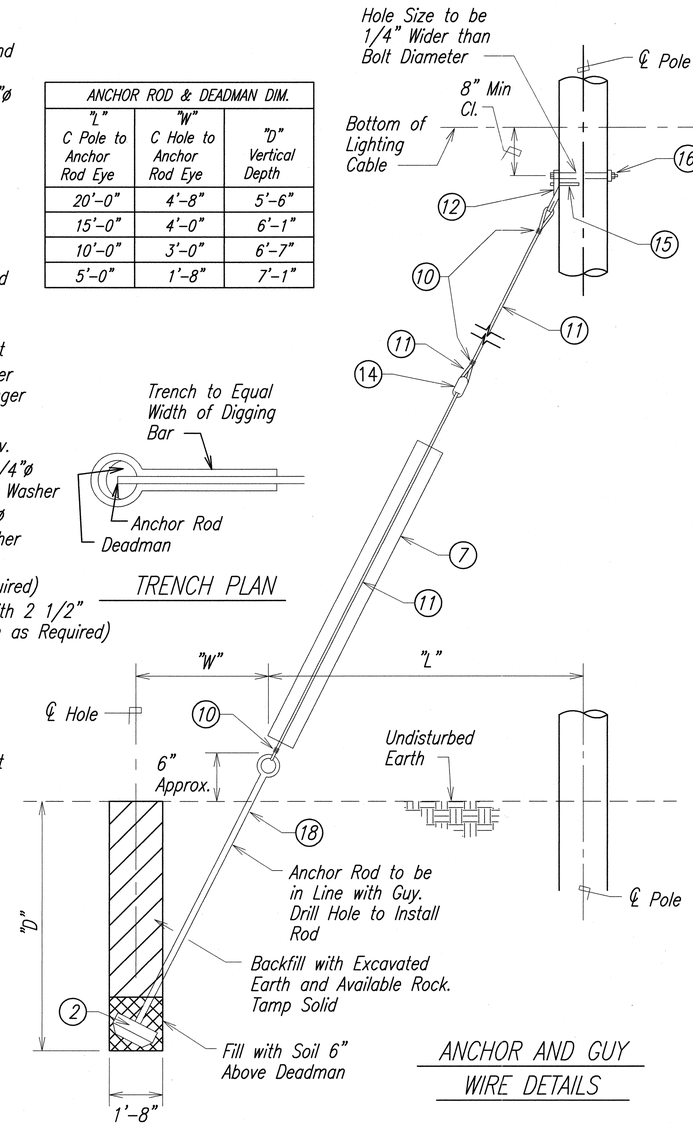

ANCHOR AND GUY WIRE DETAILS

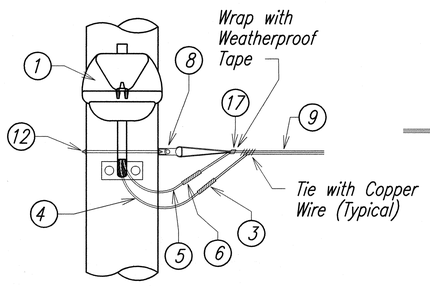

DEADEND POLE DETAIL "C"

Not to Scale

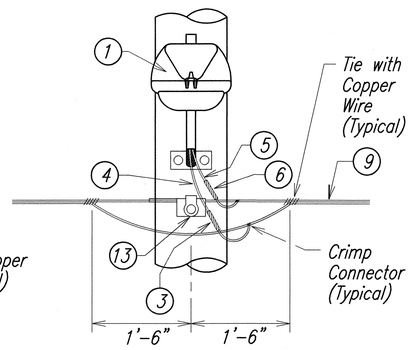

THRU POLE DETAIL "D"

Not to Scale

GENERAL NOTES:

Termi-Mesh is a Physical Barrier System that Prevents Ground Termites from Attacking Wood Poles Below Grade. Careful Installation is Essential to Insure Effective Termite Protection.

Termi-Mesh is a Preformed Stainless Steel Mesh Sock that is Installed Over the Butt of the Pole. The Sock is Tightly Secured to the Pole with all Excess Mesh Folded Over to Prevent Termites from Penetrating Through Voids or Checks in the Wood. The Sock Covers the Butt of the Pole up to 6 Inches Above Grade to Prevent Termites from Forming Mud Tunnels Over the Barrier.

STATE OF HAWAII
DEPARTMENT OF TRANSPORTATION
HIGHWAYS DIVISION

TEMPORARY STREET LIGHT DETAIL

HONOAPIILANI HIGHWAY REALIGNMENT, PHASE 1A
Future Keawe Street Extension to Lahainaluna Road
Federal Aid Project No. NH-030-1(35)R
Scale: As Noted Date: April 2006

SHEET No. 1 OF 1 SHEETS