FED. ROAD DIST. NO.	STATE	FED. AID PROJ. NO.	FISCAL YEAR	SHEET NO.	TOTAL SHEETS
HAWAII	HAW.	NH-030-1(35)R	2009	271	383

INDEX TO BRIDGE DRAWINGS

DAVID K. FUJIWARA
LICENSED PROFESSIONAL ENGINEER
NO. 8104-S
HAWAII, U.S.A.

THIS WORK WAS PREPARED BY ME OR UNDER MY SUPERVISION.

David K. Fujiwara APRIL 30, 2012
KSF, INC. LIC. EXP. DATE

STATE OF HAWAII
DEPARTMENT OF TRANSPORTATION
HIGHWAYS DIVISION

INDEX TO BRIDGE DRAWINGS

HONOAPIILANI HIGHWAY REALIGNMENT, PHASE 1A
Future Keawe St Extension to Lahainaluna Rd, Part B
Fed. Aid Proj. No. NH-030-1(35)R

Scale: None Date: June, 2010

SHEET No. SB0.1 OF 3 SHEETS

ORIGINAL PLAN | NOTE BOOK No. | SURVEY PLOTTED BY | DRAWN BY | TRACED BY | DESIGNED BY | QUANTITIES BY | CHECKED BY | DATE

DRAWING NAME: Z:\00 ONGOING\40019.0-HONOAPIILANI LAHAINA BYPASS-KAHOMA WO\06-15-10 COMBINE LAHAINA FINAL DESIGN\HH-SB001.DWG PLOT TIME: 06-14-10, 2:40 PM

FED. ROAD DIST. NO.	STATE	FED. AID PROJ. NO.	FISCAL YEAR	SHEET NO.	TOTAL SHEETS
HAWAII	HAW.	NH-030-1(35)R	2009	272	383

ORIGINAL PLAN	SURVEY PLOTTED BY	DATE
	DRAWN BY	
NOTE BOOK	TRACED BY	
	DESIGNED BY	
No.	QUANTITIES BY	
	CHECKED BY	

DRAWING NAME: Z:\00 ONGOING\40019.0-HONOAPIILANI LAHAINA BYPASS-KAHOMA WO\06-15-10 COMBINE LAHAINA FINAL DESIGN\HI-SB001.DWG PLOT TIME: 06-14-10, 2:40 PM

DAVID K. FUJIWARA
LICENSED PROFESSIONAL ENGINEER
NO. 8104-S
HAWAII, U.S.A.

THIS WORK WAS PREPARED BY ME OR UNDER MY SUPERVISION.

David K. Fujiwara APRIL 30, 2012
KSF, INC. LIC. EXP. DATE

STATE OF HAWAII
DEPARTMENT OF TRANSPORTATION
HIGHWAYS DIVISION

INDEX TO BRIDGE DRAWINGS

HONOAPIILANI HIGHWAY REALIGNMENT, PHASE 1A
Future Keawe St Extension to Lahainaluna Rd, Part B
Fed. Aid Proj. No. NH-030-1(35)R

Scale: None Date: June, 2010

SHEET No. SB0.2 OF 3 SHEETS

FINAL DESIGN 272

FED. ROAD DIST. NO.	STATE	FED. AID PROJ. NO.	FISCAL YEAR	SHEET NO.	TOTAL SHEETS
HAWAII	HAW.	NH-030-1(35)R	2009	273	383

BRIDGE GENERAL NOTES

1. General Specifications: Hawaii Department of Transportation, Standard Specifications for Road and Bridge Construction, 1994, together with Special Provisions prepared for this Contract.

2. Design Specifications:
   (A) AASHTO 2004 LRFD Bridge Design Specifications (Third Edition) and its subsequent interim specifications with interim supplements and modifications by the Highways Division, Department of Transportation, State of Hawaii.
   (B) HDOT "Design Criteria for Bridges and Structures" Dated Feb. 14, 2005.
   (C) AASHTO "Standard Specifications for Structural Supports for Highway Signs, Luminaires, and Traffic Signals", 4th edition (2001) including all subsequent interim revisions.

3. Loads:
   (A) Dead Load: An allowance of 25 PSF for future wearing surface of asphalt concrete has been provided for in the design.
   (B) Live Load: AASHTO HL-93 Truck Loading
   (C) Seismic Loads: Acceleration coefficient 0.24
   Seismic Performance Zone 3
   Importance Category ..... Critical
   Soil Profile ..... Type 1
   (D) Utility Load: An allowance of 150 PLF on each side of the Bridge for Utility Loads has been provided for in the design.

4. Materials:
   (A) All concrete strengths for Kahoma Stream Bridge shall be as noted below:

Item No.	Structural Parts	Classes of Concrete	Specified Compressive Strength, f'c (28 Days)	Maximum w/c Ratio
(1)	Deck Topping over Precast Deck Planks, Bent Caps, and End Blocks (See Note 4.(M))	–	8,000 psi	0.35
(2)	Precast Deck Planks & Topping above bottom slab of Precast Girder (See Note 4.(C))	–	8,000 psi	0.4
(3)	Precast Girders (See Note 4.(K))	–	8,000 psi	0.4
(4)	CIP Beam above Bent Cap & Topping above bottom slab of Precast Girder (See Note 4.(C))	–	8,000 psi	0.4
(5)	CIP Bent (Cap and Column) (See Note 4.(C) & (K))	–	8,000 psi	0.4
(6)	CIP Stiffener Beam (See Note 4.(C) & (K))	–	8,000 psi	0.4
(7)	Precast Arch Tie Plank (See Note 4.(C))	–	8,000 psi	0.4
(8)	End Block (See Note 4.(C))	–	8,000 psi	0.4
(9)	Tendon Anchorage Blockouts (See Notes 4.(C) and 4.(K))	–	8,000 psi	0.4
(10)	Abutment Walls & Footing (See Note 4.(C))	–	4,000 psi	0.45

4. Materials: (Cont.)

Item No.	Structural Parts	Classes of Concrete	Specified Compressive Strength, f'c (28 Days)	Maximum w/c Ratio
(11)	Makai Railing (See Notes 4.(C), 4.(K) and 4.(O))	–	4,000 psi	0.45
(12)	Mauka Railing (See Notes 4(K), 4(O), and 4.(P))	–	3,000 psi	0.38
(13)	End Post (See Note 4.(K))	–	4,000 psi	0.45
(14)	Approach Slabs (See Notes 4.(C), 4(K), 4(O),	–	5,000 psi	0.45
(15)	Except as noted otherwise, all others	A	3,000 psi	0.55

   (C) For Kahoma Stream Bridge 1 Gal. Shrinkage Reducing Admixture (SRA) per CY concrete shall be included in the concrete mix for the Bridge Deck Topping, Precast Deck Planks, End Blocks, CIP Stiffener Beam, and Topping above bottom slab of Precast Girder, Precast Arch Tie Plank, and Approach Slabs. 96 oz SRA per CY concrete shall be included in railing.
   (E) All reinforcing steel shall be ASTM A615 Grade 60 unless otherwise noted.
   (F) All structural steel shall be ASTM A36 hot-dip galvanized after fabrication, unless otherwise noted.
   (G) All anchor bolts, washers and nuts shall be ASTM A325 hot-dip galvanized after fabrication, unless otherwise specified.
   (H) For materials of post-tensioned concrete see applicable post-tensioned concrete notes.
   (I) Steel tubes shall conform to ASTM A500, Grade B.
   (J) Elastomeric polyurethane sealant shall be Sonneborn Sonolastic SL 2 or equal.
   (K) For Kahoma Stream Bridge, 1.5 pints per CY concrete of CORTEC MCI-2005 NS corrosion inhibitor shall be added to Bridge Deck Topping over Precast Deck Planks, Bent Caps, Approach Slabs and End Blocks, Post-Tensioning Blockouts, Precast Girders and to non-shrink grout for the Friction Pendulum Seismic Isolation Bearings.
   (L) For materials of post-tensioned concrete see applicable post-tensioned concrete notes.
   (M) The concrete mix for Item No. (1) shall have a maximum shrinkage strain of .00006 at 28 days and .000145 at 56 days according to ASTM C512.
   (N) The Contractor shall use curing compound SINAK LITHIUM for Bridge structures and Approach Slabs. Six copies of the Manufacturer's brochure and certificates of test result shall be submitted. All work shall conform with the Manufacturer's recommendations. Coverage rate shall be 500 square feet per gallon. After the curing compound is applied the deck surface shall be covered by burlene for seven days.
   (O) 13 lbs./c.y. of HP 67/36 fiber shall be included in the railing and Approach Slab concrete.
   (P) Light Weight Concrete for mauka railing shall have an air dry density of less than 125 lb./ft^3.

5. Reinforcement:
   (A) The minimum covering measured from the surface of the concrete to the face of any reinforcing bars shall be as follows, except as otherwise shown:
      (1) Deck topping
         A. Top bars = 2 1/2"
         B Bottom bars = 1 1/2" except as otherwise noted
      (2) Abutment Walls = 2" to outermost reinforcing except as otherwise noted
      (3) Approach Slab top bars = 2 1/2"
         Approach Slab bottom bars = 3"
      (4) Concrete cast against and permanently exposed to earth = 3"
      (5) All others unless otherwise noted = 2"
   (B) Reinforcing bars shall be detailed in accordance with the latest edition of the design specification in Note 2 unless otherwise noted.
   (C) Minimum clear spacing between parallel bars shall be 1 1/2 times the diameter of bars (for non bundled bars). In no case shall the clear distance between the bars be less than 1 1/2 times the maximum size of the coarse aggregate or 1 1/2" (except at approach slab dowel).
   (D) All dimensions relating to reinforcing bars are to centers of bars unless otherwise noted.
   (E) Reinforcing bars shall be securely tied at all intersections and lap splices except where the spacing of intersections is less than one foot in each direction, in which case alternate intersections shall be tied.
   (F) Supports for reinforcing steel bars shall be precast concrete having 8,000 psi compressive strength. Wire bar supports and all plastic support shall not be allowed in precast concrete beams.

6. Foundation:
   (A) Kahoma Stream Bridge
      (1) For geotechnical design parameters, refer to Geotechnical Sheets.
      (2) For additional geotechnical information, see Soils Report by Geolabs, Inc.

7. Other Notes:
   (A) Reference Drawings:
      (1) For Construction Sequence of Kahoma Stream Bridge, See sheet SB16.1.
   (B) For Kahoma Stream Bridge unfactored loading at each shaded area (shown on SB8.1 and SB9.1) area as noted below:
      (1) DC = 3,000 kips
      (2) DW = 500 kips
      (3) LL+I = 1,500 kips

DAVID K. FUJIWARA LICENSED PROFESSIONAL ENGINEER NO. 8104-S HAWAII, U.S.A.

THIS WORK WAS PREPARED BY ME OR UNDER MY SUPERVISION.

KSF, INC. — APRIL 30, 2012 LIC. EXP. DATE

DATE	REVISION
01-28-13	4 Revision
01-17-13	3 Revision
08-18-10	1 Revision

STATE OF HAWAII
DEPARTMENT OF TRANSPORTATION
HIGHWAYS DIVISION

BRIDGE GENERAL NOTES

HONOAPIILANI HIGHWAY REALIGNMENT, PHASE 1A
Future Keawe St Extension to Lahainaluna Rd, Part B
Fed. Aid Proj. No. NH-030-1(35)R

Scale: None — Date: August, 2010

SHEET No. SB0.3 OF 3 SHEETS

ORIGINAL PLAN — SURVEY PLOTTED BY — DRAWN BY — TRACED BY — DESIGNED BY — QUANTITIES BY — CHECKED BY — DATE — NOTE BOOK No.

DRAWING NAME: Z:\DO ONGOING\40019.0-HONOAPIILANI LAHAINA BYPASS-KAHOMA - HDCC\01-28-13 DELTA3 GENNOTES\HH-SB003 REV1 DELTA3.DWG PLOT TIME: 01-28-13, 2:51 PM

FINAL DESIGN

FED. ROAD DIST. NO.	STATE	FED. AID PROJ. NO.	FISCAL YEAR	SHEET NO.	TOTAL SHEETS
HAWAII	HAW.	NH-030-1(35)R	2009	273	383

BRIDGE GENERAL NOTES

1. General Specifications: Hawaii Department of Transportation, Standard Specifications for Road and Bridge Construction, 1994, together with Special Provisions prepared for this Contract.

2. Design Specifications:
   (A) AASHTO 2004 LRFD Bridge Design Specifications (Third Edition) and its subsequent interim specifications with interim supplements and modifications by the Highways Division, Department of Transportation, State of Hawaii.
   (B) HDOT "Design Criteria for Bridges and Structures" Dated Feb. 14, 2005.
   (C) AASHTO "Standard Specifications for Structural Supports for Highway Signs, Luminaires, and Traffic Signals", 4th edition (2001) including all subsequent interim revisions.

3. Loads:
   (A) Dead Load: An allowance of 25 PSF for future wearing surface of asphalt concrete has been provided for in the design.
   (B) Live Load: AASHTO HL-93 Truck Loading
   (C) Seismic Loads: Acceleration coefficient 0.24
   Seismic Performance Zone 3
   Importance Category ..... Critical
   Soil Profile ..... Type 1
   (D) Utility Load: An allowance of 150 PLF on each side of the Bridge for Utility Loads has been provided for in the design.

4. Materials:
   (A) All concrete strengths for Kahoma Stream Bridge shall be as noted below:

Item No.	Structural Parts	Classes of Concrete	Specified Compressive Strength, f'c (28 Days)	Maximum w/c Ratio
(1) 3	Deck Topping over Precast Deck Planks, Bent Caps, and End Blocks (See Note 4.(M))	–	8,000 psi	0.35
(2)	Precast Deck Planks & Topping above bottom slab of Precast Girder (See Note 4.(C))	–	8,000 psi	0.4
(3)	Precast Girders (See Note 4.(K))	–	8,000 psi	0.4
(4)	CIP Beam above Bent Cap & Topping above bottom slab of Precast Girder (See Note 4.(C))	–	8,000 psi	0.4
(5)	CIP Bent (Cap and Column) (See Note 4.(C) & (K))	–	8,000 psi	0.4
(6)	CIP Stiffener Beam (See Note 4.(C) & (K))	–	8,000 psi	0.4
(7)	Precast Arch Tie Plank (See Note 4.(C))	–	8,000 psi	0.4
(8)	End Block (See Note 4.(C))	–	8,000 psi	0.4
(9)	Tendon Anchorage Blockouts (See Notes 4.(C) and 4.(K))	–	8,000 psi	0.4
(10)	Abutment Walls & Footing (See Note 4.(C))	–	4,000 psi	0.45 1

4. Materials: (Cont.)

Item No.	Structural Parts	Classes of Concrete	Specified Compressive Strength, f'c (28 Days)	Maximum w/c Ratio
3 (11)	Makai Railing (See Notes 4.(C), 4.(K) and 4.(O))	–	4,000 psi	0.45
3 (12)	Mauka Railing (See Notes 4.(C), 4(K), 4(O), and 4.(P))	–	3,000 psi	0.38
3 (13)	End Post (See Note 4.(K))	–	4,000 psi	0.45
3 (14)	Approach Slabs (See Notes 4.(C), 4(K), 4(O),	–	5,000 psi	0.45
3 (15)	Except as noted otherwise, all others	A	3,000 psi	0.55

   3 (C) For Kahoma Stream Bridge 1 Gal. Shrinkage Reducing Admixture (SRA) per CY concrete shall be included in the concrete mix for the Bridge Deck Topping, Precast Deck Planks, End Blocks, CIP Stiffener Beam, and Topping above bottom slab of Precast Girder, Precast Arch Tie Plank, and Approach Slabs. 96 oz SRA per CY concrete shall be included in railing.
   (E) All reinforcing steel shall be ASTM A615 Grade 60 unless otherwise noted.
   (F) All structural steel shall be ASTM A36 hot-dip galvanized after fabrication, unless otherwise noted.
   (G) All anchor bolts, washers and nuts shall be ASTM A325 hot-dip galvanized after fabrication, unless otherwise specified.
   (H) For materials of post-tensioned concrete see applicable post-tensioned concrete notes.
   (I) Steel tubes shall conform to ASTM A500, Grade B.
   (J) Elastomeric polyurethane sealant shall be Sonneborn Sonolastic SL 2 or equal.
   (K) For Kahoma Stream Bridge, 1.5 pints per CY concrete of CORTEC MCI-2005 NS corrosion inhibitor shall be added to Bridge Deck Topping over Precast Deck Planks, Bent Caps, Approach Slabs and End Blocks, Post-Tensioning Blockouts, Precast Girders and to non-shrink grout for the Friction Pendulum Seismic Isolation Bearings.
   (L) For materials of post-tensioned concrete see applicable post-tensioned concrete notes.
   (M) The concrete mix for Item No. (1) shall have a maximum shrinkage strain of .00006 at 28 days and .000145 at 56 days according to ASTM C512.
   (N) The Contractor shall use curing compound SINAK LITHIUM for Bridge structures and Approach Slabs. Six copies of the Manufacturer's brochure and certificates of test result shall be submitted. All work shall conform with the Manufacturer's recommendations. Coverage rate shall be 500 square feet per gallon. After the curing compound is applied the deck surface shall be covered by burlene for seven days.
   3 (O) 13 lbs./c.y. of HP 67/36 fiber shall be included in the railing and Approach Slab concrete.
   3 (P) Light Weight Concrete for mauka railing shall have an air dry density of less than 125 lb./ft^3.

5. Reinforcement:
   (A) The minimum covering measured from the surface of the concrete to the face of any reinforcing bars shall be as follows, except as otherwise shown:
   (1) Deck topping
   A. Top bars = 2 1/2"
   B Bottom bars = 1 1/2" except as otherwise noted
   (2) Abutment Walls = 2" to outermost reinforcing except as otherwise noted
   (3) Approach Slab top bars = 2 1/2"
   Approach Slab bottom bars = 3"
   (4) Concrete cast against and permanently exposed to earth = 3"
   (5) All others unless otherwise noted = 2"
   (B) Reinforcing bars shall be detailed in accordance with the latest edition of the design specification in Note 2 unless otherwise noted.
   (C) Minimum clear spacing between parallel bars shall be 1 1/2 times the diameter of bars (for non bundled bars). In no case shall the clear distance between the bars be less than 1 1/2 times the maximum size of the coarse aggregate or 1 1/2" (except at approach slab dowel).
   (D) All dimensions relating to reinforcing bars are to centers of bars unless otherwise noted.
   (E) Reinforcing bars shall be securely tied at all intersections and lap splices except where the spacing of intersections is less than one foot in each direction, in which case alternate intersections shall be tied.
   (F) Supports for reinforcing steel bars shall be precast concrete having 8,000 psi compressive strength. Wire bar supports and all plastic support shall not be allowed in precast concrete beams.

6. Foundation:
   (A) Kahoma Stream Bridge
   (1) For geotechnical design parameters, refer to Geotechnical Sheets.
   (2) For additional geotechnical information, see Soils Report by Geolabs, Inc.

7. Other Notes:
   (A) Reference Drawings:
   (1) For Construction Sequence of Kahoma Stream Bridge, See sheet SB16.1.
   (B) For Kahoma Stream Bridge unfactored loading at each shaded area (shown on SB8.1 and SB9.1) area as noted below:
   (1) DC = 3,000 kips
   (2) DW = 500 kips
   (3) LL+I = 1,500 kips

DAVID K. FUJIMAKA LICENSED PROFESSIONAL ENGINEER NO. 8104-S HAWAII, U.S.A.

THIS WORK WAS PREPARED BY ME OR UNDER MY SUPERVISION.

KSF, INC. — APRIL 30, 2012 LIC. EXP. DATE

DATE	REVISION
01-17-13	3 Revision
08-18-10	1 Revision

STATE OF HAWAII
DEPARTMENT OF TRANSPORTATION
HIGHWAYS DIVISION

BRIDGE GENERAL NOTES

HONOAPIILANI HIGHWAY REALIGNMENT, PHASE 1A
Future Keawe St Extension to Lahainaluna Rd, Part B
Fed. Aid Proj. No. NH-030-1(35)R

Scale: None — Date: August, 2010

SHEET No. SB0.3 OF 3 SHEETS

FINAL DESIGN ~~273~~ Rev

ORIGINAL PLAN | SURVEY PLOTTED BY | DRAWN BY | TRACED BY | DESIGNED BY | QUANTITIES BY | CHECKED BY | DATE | NOTE BOOK | No.

DRAWING NAME: Z:\00 ONGOING\40019.0-HONOAPIILANI LAHAINA BYPASS-KAHOMA - HDOC\01-18-13 DELTA3 GENNOTES\HH-SB003 REV1 DELTA3.DWG PLOT TIME: 01-17-13, 10:11 AM

FED. ROAD DIST. NO.	STATE	FED. AID PROJ. NO.	FISCAL YEAR	SHEET NO.	TOTAL SHEETS
HAWAII	HAW.	NH-030-1(35)R	2009	273	383

BRIDGE GENERAL NOTES

1. General Specifications: Hawaii Department of Transportation, Standard Specifications for Road and Bridge Construction, 1994, together with Special Provisions prepared for this Contract.

2. Design Specifications:

   (A) AASHTO 2004 LRFD Bridge Design Specifications (Third Edition) and its subsequent interim specifications with interim supplements and modifications by the Highways Division, Department of Transportation, State of Hawaii.

   (B) HDOT "Design Criteria for Bridges and Structures" Dated Feb. 14, 2005.

   (C) AASHTO "Standard Specifications for Structural Supports for Highway Signs, Luminaires, and Traffic Signals", 4th edition (2001) including all subsequent interim revisions.

3. Loads:

   (A) Dead Load: An allowance of 25 PSF for future wearing surface of asphalt concrete has been provided for in the design.

   (B) Live Load: AASHTO HL-93 Truck Loading

   (C) Seismic Loads:
   Acceleration coefficient 0.24
   Seismic Performance Zone 3
   Importance Category ..... Critical
   Soil Profile ..... Type 1

   (D) Utility Load: An allowance of 150 PLF on each side of the Bridge for Utility Loads has been provided for in the design.

4. Materials:

   (A) All concrete strengths for Kahoma Stream Bridge shall be as noted below:

Item No.	Structural Parts	Classes of Concrete	Specified Compressive Strength, f'c (28 Days)	Maximum w/c Ratio
(1)	Deck Topping over Precast Deck Planks, Bent Caps, End Blocks and Approach Slabs (See Note 4.(M))	–	8,000 psi	0.35
(2)	Precast Deck Planks & Topping above bottom slab of Precast Girder (See Note 4.(C))	–	8,000 psi	0.4
(3)	Precast Girders (See Note 4.(K))	–	8,000 psi	0.4
(4)	CIP Beam above Bent Cap & Topping above bottom slab of Precast Girder (See Note 4.(C))	–	8,000 psi	0.4
(5)	CIP Bent (Cap and Column) (See Note 4.(C) & (K))	–	8,000 psi	0.4
(6)	CIP Stiffener Beam (See Note 4.(C) & (K))	–	8,000 psi	0.4
(7)	Precast Arch Tie Plank (See Note 4.(C))	–	8,000 psi	0.4
(8)	End Block (See Note 4.(C))	–	8,000 psi	0.4
(9)	Tendon Anchorage Blockouts (See Notes 4.(C) and 4.(K))	–	8,000 psi	0.4

4. Materials: (Cont.)

Item No.	Structural Parts	Classes of Concrete	Specified Compressive Strength, f'c (28 Days)	Maximum w/c Ratio
(10)	Abutment Walls & Footing (See Note 4.(C))	–	4,000 psi	0.45 △1
(11)	Railing (See Notes 4.(C) and 4.(K))	–	4,000 psi	0.45
(12)	End Post (See Note 4.(K))	–	4,000 psi	0.45
(13)	Except as noted otherwise, all others	A	3,000 psi	0.55

   (C) For Kahoma Stream Bridge 1 Gal. Shrinkage Reducing Admixture (SRA) per CY concrete shall be included in the concrete mix for the Bridge Deck Topping, Precast Deck Planks, End Blocks, CIP Stiffener Beam, and Topping above bottom slab of Precast Girder, Precast Arch Tie Plank. 96 oz SRA per CY concrete shall be included in railing.

   (E) All reinforcing steel shall be ASTM A615 Grade 60 unless otherwise noted.

   (F) All structural steel shall be ASTM A36 hot-dip galvanized after fabrication, unless otherwise noted.

   (G) All anchor bolts, washers and nuts shall be ASTM A325 hot-dip galvanized after fabrication, unless otherwise specified.

   (H) For materials of post-tensioned concrete see applicable post-tensioned concrete notes.

   (I) Steel tubes shall conform to ASTM A500, Grade B.

   (J) Elastomeric polyurethane sealant shall be Sonneborn Sonolastic SL 2 or equal.

   (K) For Kahoma Stream Bridge, 1.5 pints per CY concrete of CORTEC MCI-2005 NS corrosion inhibitor shall be added to Bridge Deck Topping over Precast Deck Planks, Bent Caps, Approach Slabs and End Blocks, Post-Tensioning Blockouts, Precast Girders and to non-shrink grout for the Friction Pendulum Seismic Isolation Bearings.

   (L) For materials of post-tensioned concrete see applicable post-tensioned concrete notes.

   (M) The concrete mix for Item No. (1) shall have a maximum shrinkage strain of .00006 at 28 days and .000145 at 56 days according to ASTM C512.

   (N) The Contractor shall use curing compound SINAK LITHIUM for Bridge structures and Approach Slabs. Six copies of the Manufacturer's brochure and certificates of test result shall be submitted. All work shall conform with the Manufacturer's recommendations. Coverage rate shall be 500 square feet per gallon. After the curing compound is applied the deck surface shall be covered by burlene for seven days.

5. Reinforcement:

   (A) The minimum covering measured from the surface of the concrete to the face of any reinforcing bars shall be as follows, except as otherwise shown:
   (1) Deck topping
   A. Top bars = 2 1/2"
   B Bottom bars = 1 1/2" except as otherwise noted

5. Reinforcement: (Cont.)

   (2) Abutment Walls = 2" to outermost reinforcing except as otherwise noted

   (3) Approach Slab top bars = 2 1/2"
   Approach Slab bottom bars = 3"

   (4) Concrete cast against and permanently exposed to earth = 3"

   (5) All others unless otherwise noted = 2"

   (B) Reinforcing bars shall be detailed in accordance with the latest edition of the design specification in Note 2 unless otherwise noted.

   (C) Minimum clear spacing between parallel bars shall be 1 1/2 times the diameter of bars (for non bundled bars). In no case shall the clear distance between the bars be less than 1 1/2 times the maximum size of the coarse aggregate or 1 1/2" (except at approach slab dowel).

   (D) All dimensions relating to reinforcing bars are to centers of bars unless otherwise noted.

   (E) Reinforcing bars shall be securely tied at all intersections and lap splices except where the spacing of intersections is less than one foot in each direction, in which case alternate intersections shall be tied.

   (F) Supports for reinforcing steel bars shall be precast concrete having 8,000 psi compressive strength. Wire bar supports and all plastic support shall not be allowed in precast concrete beams.

6. Foundation:

   (A) Kahoma Stream Bridge

   (1) For geotechnical design parameters, refer to Geotechnical Sheets.

   (2) For additional geotechnical information, see Soils Report by Geolabs, Inc.

7. Other Notes:

   (A) Reference Drawings:

   (1) For Construction Sequence of Kahoma Stream Bridge, See sheet SB16.1.

   (B) For Kahoma Stream Bridge unfactored loading at each shaded area (shown on SB8.1 and SB9.1) area as noted below:

   (1) DC = 3,000 kips

   (2) DW = 500 kips

   (3) LL+I = 1,500 kips

DAVID K. FUJIMARA LICENSED PROFESSIONAL ENGINEER NO. 8104-S HAWAII, U.S.A.

THIS WORK WAS PREPARED BY ME OR UNDER MY SUPERVISION.

KSF, INC. — APRIL 30, 2012 LIC. EXP. DATE

DATE	REVISION
08-18-10	△1 Revision

STATE OF HAWAII
DEPARTMENT OF TRANSPORTATION
HIGHWAYS DIVISION

BRIDGE GENERAL NOTES

HONOAPIILANI HIGHWAY REALIGNMENT, PHASE 1A
Future Keawe St Extension to Lahainaluna Rd, Part B
Fed. Aid Proj. No. NH-030-1(35)R

Scale: None — Date: June, 2010

SHEET No. SB0.3 OF 3 SHEETS

FINAL DESIGN 273 rev.

ORIGINAL PLAN — SURVEY PLOTTED BY / DRAWN BY / TRACED BY / DESIGNED BY / QUANTITIES BY / CHECKED BY / DATE — NOTE BOOK No.

DRAWING NAME: Z:\00 ONGOING\40019-HONOAPIILANI LAHAINA BYPASS-KAHOMA WO\08-18-10 COMBINE LAHAINA FINAL DESIGN\HH-SB003.DWG PLOT TIME: 08-18-10, 1:33 PM

FED. ROAD DIST. NO.	STATE	FED. AID PROJ. NO.	FISCAL YEAR	SHEET NO.	TOTAL SHEETS
HAWAII	HAW.	NH-030-1(35)R	2009	273	383

BRIDGE GENERAL NOTES

1. General Specifications: Hawaii Department of Transportation, Standard Specifications for Road and Bridge Construction, 1994, together with Special Provisions prepared for this Contract.

2. Design Specifications:

   (A) AASHTO 2004 LRFD Bridge Design Specifications (Third Edition) and its subsequent interim specifications with interim supplements and modifications by the Highways Division, Department of Transportation, State of Hawaii.

   (B) HDOT "Design Criteria for Bridges and Structures" Dated Feb. 14, 2005.

   (C) AASHTO "Standard Specifications for Structural Supports for Highway Signs, Luminaires, and Traffic Signals", 4th edition (2001) including all subsequent interim revisions.

3. Loads:

   (A) Dead Load: An allowance of 25 PSF for future wearing surface of asphalt concrete has been provided for in the design.

   (B) Live Load: AASHTO HL-93 Truck Loading

   (C) Seismic Loads:
   Acceleration coefficient 0.24
   Seismic Performance Zone 3
   Importance Category ..... Critical
   Soil Profile ..... Type 1

   (D) Utility Load: An allowance of 150 PLF on each side of the Bridge for Utility Loads has been provided for in the design.

4. Materials:

   (A) All concrete strengths for Kahoma Stream Bridge shall be as noted below:

Item No.	Structural Parts	Classes of Concrete	Specified Compressive Strength, f'c (28 Days)	Maximum w/c Ratio
(1)	Deck Topping over Precast Deck Planks, Bent Caps, End Blocks and Approach Slabs (See Note 4.(M))	–	8,000 psi	0.35
(2)	Precast Deck Planks & Topping above bottom slab of Precast Girder (See Note 4.(C))	–	8,000 psi	0.4
(3)	Precast Girders (See Note 4.(K))	–	8,000 psi	0.4
(4)	CIP Beam above Bent Cap & Topping above bottom slab of Precast Girder (See Note 4.(C))	–	8,000 psi	0.4
(5)	CIP Bent (Cap and Column) (See Note 4.(C) & (K))	–	8,000 psi	0.4
(6)	CIP Stiffener Beam (See Note 4.(C) & (K))	–	8,000 psi	0.4
(7)	Precast Arch Tie Plank (See Note 4.(C))	–	8,000 psi	0.4
(8)	End Block (See Note 4.(C))	–	8,000 psi	0.4
(9)	Tendon Anchorage Blockouts (See Notes 4.(C) and 4.(K))	–	8,000 psi	0.4

4. Materials: (Cont.)

Item No.	Structural Parts	Classes of Concrete	Specified Compressive Strength, f'c (28 Days)	Maximum w/c Ratio
(10)	Abutment Walls & Footing (See Note 4.(C))	–	6,000 psi	0.4
(11)	Railing (See Notes 4.(C) and 4.(K))	–	4,000 psi	0.45
(12)	End Post (See Note 4.(K))	–	4,000 psi	0.45
(13)	Except as noted otherwise, all others	A	3,000 psi	0.55

   (C) For Kahoma Stream Bridge 1 Gal. Shrinkage Reducing Admixture (SRA) per CY concrete shall be included in the concrete mix for the Bridge Deck Topping, Precast Deck Planks, End Blocks, CIP Stiffener Beam, and Topping above bottom slab of Precast Girder, Precast Arch Tie Plank. 96 oz SRA per CY concrete shall be included in railing.

   (E) All reinforcing steel shall be ASTM A615 Grade 60 unless otherwise noted.

   (F) All structural steel shall be ASTM A36 hot-dip galvanized after fabrication, unless otherwise noted.

   (G) All anchor bolts, washers and nuts shall be ASTM A325 hot-dip galvanized after fabrication, unless otherwise specified.

   (H) For materials of post-tensioned concrete see applicable post-tensioned concrete notes.

   (I) Steel tubes shall conform to ASTM A500, Grade B.

   (J) Elastomeric polyurethane sealant shall be Sonneborn Sonolastic SL 2 or equal.

   (K) For Kahoma Stream Bridge, 1.5 pints per CY concrete of CORTEC MCI-2005 NS corrosion inhibitor shall be added to Bridge Deck Topping over Precast Deck Planks, Bent Caps, Approach Slabs and End Blocks, Post-Tensioning Blockouts, Precast Girders and to non-shrink grout for the Friction Pendulum Seismic Isolation Bearings.

   (L) For materials of post-tensioned concrete see applicable post-tensioned concrete notes.

   (M) The concrete mix for Item No. (1) shall have a maximum shrinkage strain of .00006 at 28 days and .000145 at 56 days according to ASTM C512.

   (N) The Contractor shall use curing compound SINAK LITHIUM for Bridge structures and Approach Slabs. Six copies of the Manufacturer's brochure and certificates of test result shall be submitted. All work shall conform with the Manufacturer's recommendations. Coverage rate shall be 500 square feet per gallon. After the curing compound is applied the deck surface shall be covered by burlene for seven days.

5. Reinforcement:

   (A) The minimum covering measured from the surface of the concrete to the face of any reinforcing bars shall be as follows, except as otherwise shown:

      (1) Deck topping
         A. Top bars = 2 1/2"
         B Bottom bars = 1 1/2" except as otherwise noted

5. Reinforcement: (Cont.)

      (2) Abutment Walls = 2" to outermost reinforcing except as otherwise noted

      (3) Approach Slab top bars = 2 1/2"
         Approach Slab bottom bars = 3"

      (4) Concrete cast against and permanently exposed to earth = 3"

      (5) All others unless otherwise noted = 2"

   (B) Reinforcing bars shall be detailed in accordance with the latest edition of the design specification in Note 2 unless otherwise noted.

   (C) Minimum clear spacing between parallel bars shall be 1 1/2 times the diameter of bars (for non bundled bars). In no case shall the clear distance between the bars be less than 1 1/2 times the maximum size of the coarse aggregate or 1 1/2" (except at approach slab dowel).

   (D) All dimensions relating to reinforcing bars are to centers of bars unless otherwise noted.

   (E) Reinforcing bars shall be securely tied at all intersections and lap splices except where the spacing of intersections is less than one foot in each direction, in which case alternate intersections shall be tied.

   (F) Supports for reinforcing steel bars shall be precast concrete having 8,000 psi compressive strength. Wire bar supports and all plastic support shall not be allowed in precast concrete beams.

6. Foundation:

   (A) Kahoma Stream Bridge

      (1) For geotechnical design parameters, refer to Geotechnical Sheets.

      (2) For additional geotechnical information, see Soils Report by Geolabs, Inc.

7. Other Notes:

   (A) Reference Drawings:

      (1) For Construction Sequence of Kahoma Stream Bridge, See sheet SB16.1.

   (B) For Kahoma Stream Bridge unfactored loading at each shaded area (shown on SB8.1 and SB9.1) area as noted below:

      (1) DC = 3,000 kips

      (2) DW = 500 kips

      (3) LL+I = 1,500 kips

DAVID K. FUJIWARA
LICENSED PROFESSIONAL ENGINEER
NO. 8104-S
HAWAII, U.S.A.

THIS WORK WAS PREPARED BY ME OR UNDER MY SUPERVISION.

KSF, INC. — APRIL 30, 2012 LIC. EXP. DATE

STATE OF HAWAII
DEPARTMENT OF TRANSPORTATION
HIGHWAYS DIVISION

BRIDGE GENERAL NOTES

HONOAPIILANI HIGHWAY REALIGNMENT, PHASE 1A
Future Keawe St Extension to Lahainaluna Rd, Part B
Fed. Aid Proj. No. NH-030-1(35)R

Scale: None — Date: June, 2010

SHEET No. SB0.3 OF 3 SHEETS

FINAL DESIGN 273 new

ORIGINAL PLAN — SURVEY PLOTTED BY / TRACED BY / DESIGNED BY / QUANTITIES BY / CHECKED BY — DATE
NOTE BOOK No.

DRAWING NAME: Z:\DO ONGOING\40019.0-HONOAPIILANI LAHAINA BYPASS-KAHOMA WO\06-15-10 COMBINE LAHAINA FINAL DESIGN\HH-SB003.DWG PLOT TIME: 06-14-10, 2:43 PM

FED. ROAD DIST. NO.	STATE	FED. AID PROJ. NO.	FISCAL YEAR	SHEET NO.	TOTAL SHEETS
HAWAII	HAW.	NH-030-1(35)R	2009	274	383

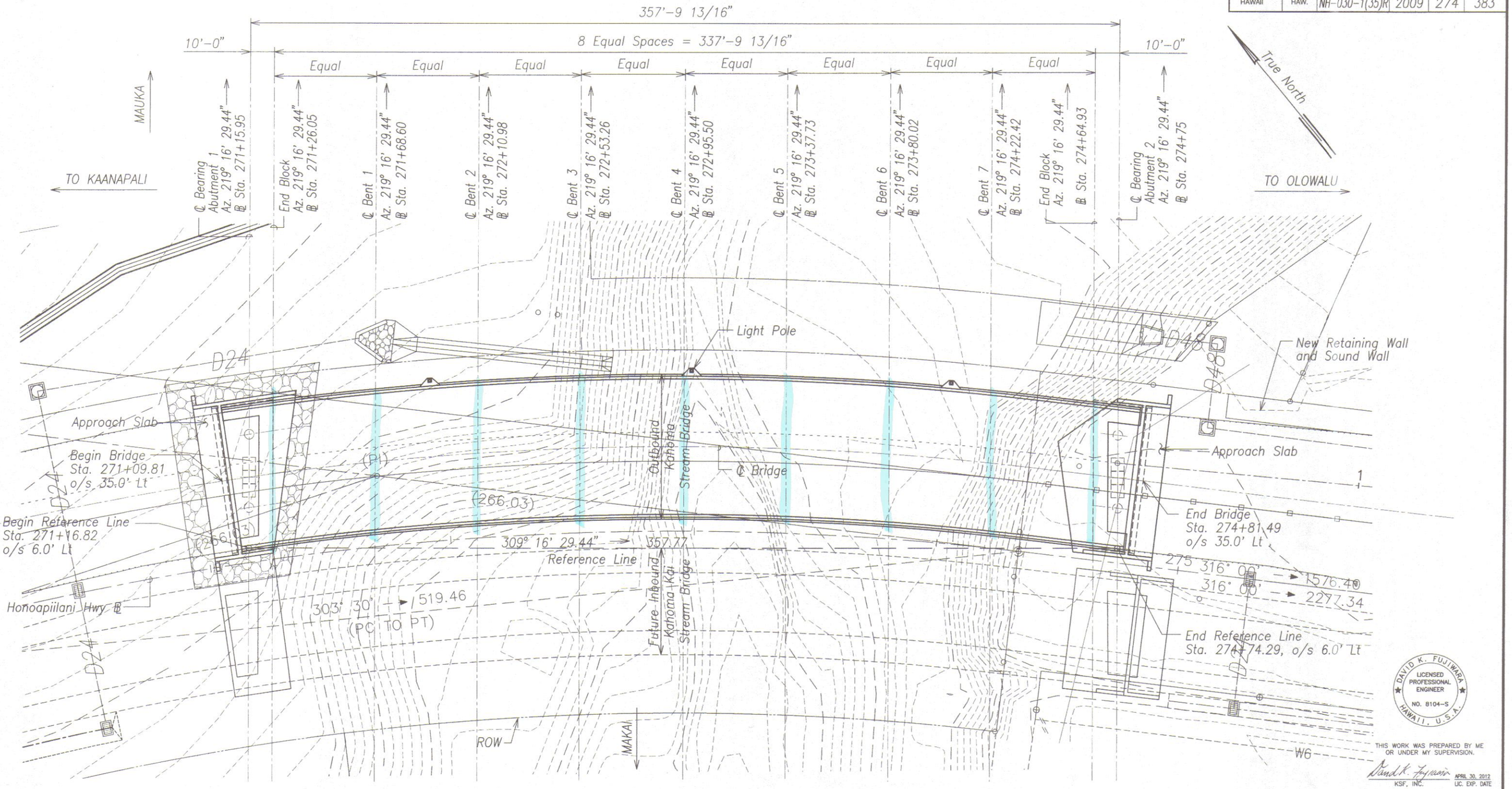

DAVID K. FUJIWARA LICENSED PROFESSIONAL ENGINEER NO. 8104-S HAWAII, U.S.A.

THIS WORK WAS PREPARED BY ME OR UNDER MY SUPERVISION.

KSF, INC. APRIL 30, 2012 LIC. EXP. DATE

NOTES:

Light Poles (3) are located on Mauka Rail at the following stations:

Honoapiilani Hwy ℄ Sta. 271+96.38
Honoapiilani Hwy ℄ Sta. 272+98.37
Honoapiilani Hwy ℄ Sta. 274+00.00

See Sheet SB12.2 for Light Standard details.
See Civil Sheets for Curve Data.

KAHOMA STREAM BRIDGE LAYOUT PLAN

Scale: 1" = 20'-0"

A SB1.1 SB1.1

STATE OF HAWAII
DEPARTMENT OF TRANSPORTATION
HIGHWAYS DIVISION

KAHOMA STREAM BRIDGE
LAYOUT PLAN
HONOAPIILANI HIGHWAY REALIGNMENT, PHASE 1A
Future Keawe St Extension to Lahainaluna Rd, Part B
Fed. Aid Proj. No. NH-030-1(35)R

Scale: As Noted Date: June, 2010

SHEET No. SB1.1 OF 4 SHEETS

ORIGINAL PLAN | SURVEY PLOTTED BY | DRAWN BY | TRACED BY | DESIGNED BY | QUANTITIES BY | CHECKED BY | DATE | NOTE BOOK No.

DRAWING NAME: Z:\00 ONGOING\40019.0-HONOAPIILANI LAHAINA BYPASS-KAHOMA WO\06-15-10 COMBINE LAHAINA FINAL DESIGN\HI-SB101.DWG PLOT TIME: 06-14-10, 2:46 PM

FED. ROAD DIST. NO.	STATE	FED. AID PROJ. NO.	FISCAL YEAR	SHEET NO.	TOTAL SHEETS
HAWAII	HAW.	NH-030-1(35)R	2009	275	383

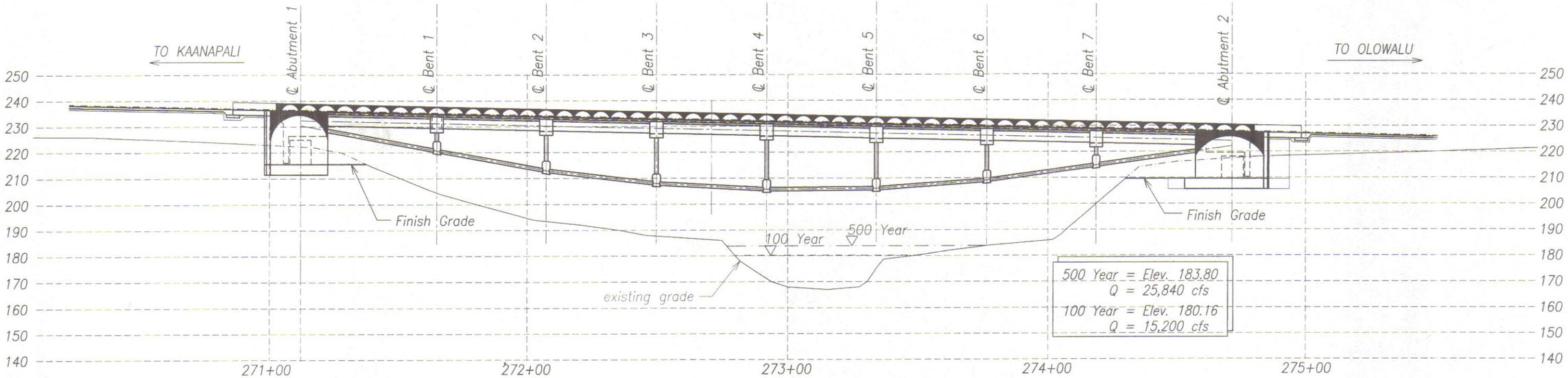

MAKAI ELEVATION – ALONG MAUKA BRIDGE

Scale: 1" = 20'-0"

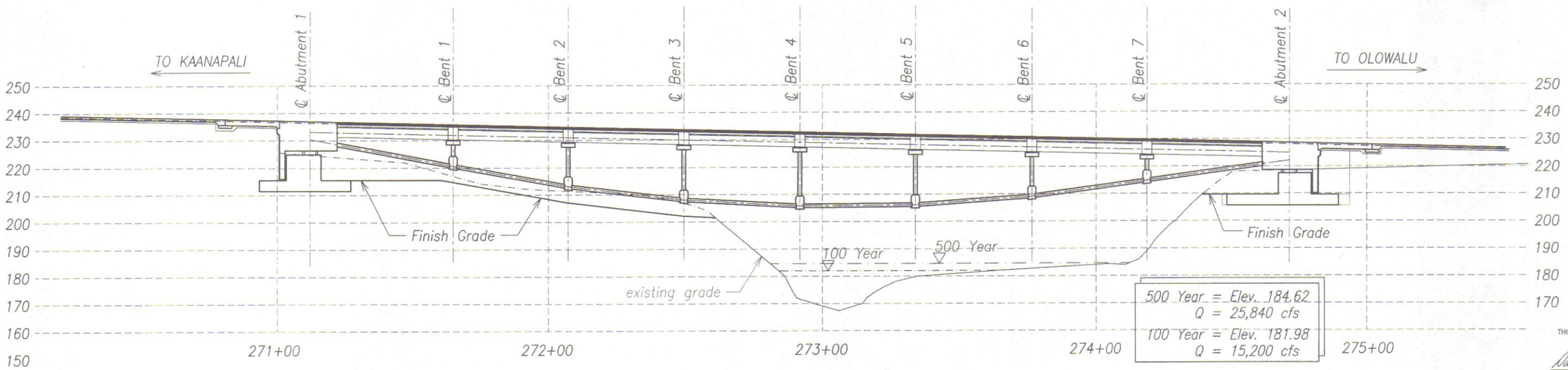

CENTERLINE SECTION – ALONG MAUKA BRIDGE

Scale: 1" = 20'-0"

DAVID K. FUJIWARA
LICENSED PROFESSIONAL ENGINEER
NO. 8104-S
HAWAII, U.S.A.

THIS WORK WAS PREPARED BY ME OR UNDER MY SUPERVISION.

KSF, INC. — APRIL 30, 2012 LIC. EXP. DATE

STATE OF HAWAII
DEPARTMENT OF TRANSPORTATION
HIGHWAYS DIVISION

KAHOMA STREAM BRIDGE
ELEVATION AND SECTION

HONOAPIILANI HIGHWAY REALIGNMENT, PHASE 1A
Future Keawe St Extension to Lahainaluna Rd, Part B
Fed. Aid Proj. No. NH-030-1(35)R

Scale: As Noted — Date: June, 2010

SHEET No. SB1.2 OF 4 SHEETS

ORIGINAL PLAN	SURVEY PLOTTED BY	DATE
	DRAWN BY	
NOTE BOOK	TRACED BY	
	DESIGNED BY	
No.	QUANTITIES BY	
	CHECKED BY	

DRAWING NAME: Z:\00 ONGOING\40019.0-HONOAPIILANI LAHAINA BYPASS-KAHOMA WO\06-15-10 COMBINE LAHAINA FINAL DESIGN\HI-SB102.DWG PLOT TIME: 06-14-10, 2:47 PM

FED. ROAD DIST. NO.	STATE	FED. AID PROJ. NO.	FISCAL YEAR	SHEET NO.	TOTAL SHEETS
HAWAII	HAW.	NH-030-1(35)R	2009	276	383

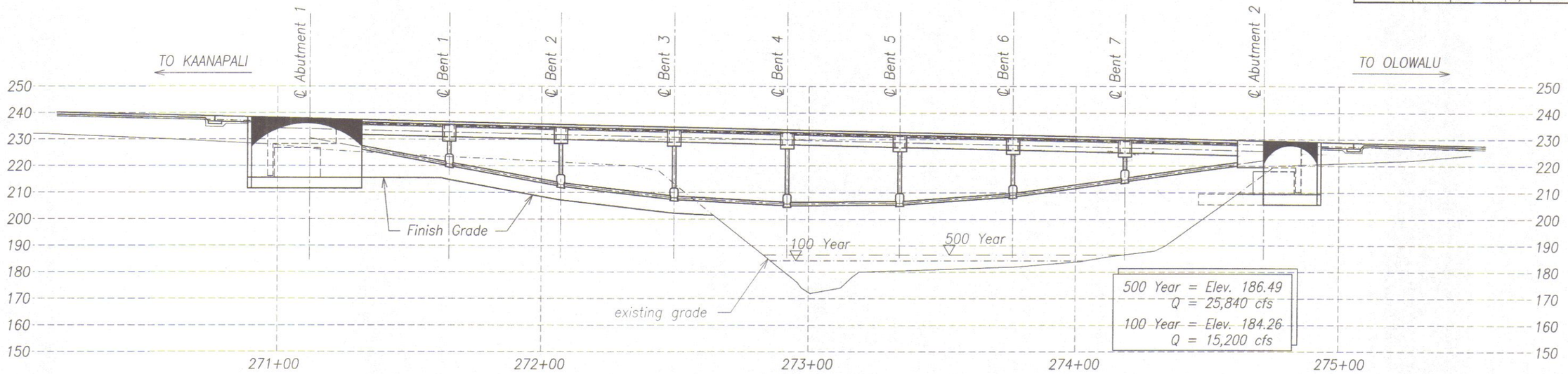

MAUKA ELEVATION – ALONG MAUKA BRIDGE

Scale: 1" = 20'-0"

ORIGINAL PLAN	SURVEY PLOTTED BY	DATE
	DRAWN BY	
NOTE BOOK	TRACED BY	
	DESIGNED BY	
	QUANTITIES BY	
No.	CHECKED BY	

DRAWING NAME: Z:\00_ONGOING\40019.0-HONOAPIILANI LAHAINA BYPASS-KAHOMA WO\06-15-10 COMBINE LAHAINA FINAL DESIGN\HH-SB102.DWG PLOT TIME: 06-14-10, 2:48 PM

DAVID K. FUJIWARA
LICENSED PROFESSIONAL ENGINEER
NO. 8104-S
HAWAII, U.S.A.

THIS WORK WAS PREPARED BY ME OR UNDER MY SUPERVISION.

KSF, INC. APRIL 30, 2012 LIC. EXP. DATE

STATE OF HAWAII
DEPARTMENT OF TRANSPORTATION
HIGHWAYS DIVISION

KAHOMA STREAM BRIDGE
ELEVATION

HONOAPIILANI HIGHWAY REALIGNMENT, PHASE 1A
Future Keawe St Extension to Lahainaluna Rd, Part B
Fed. Aid Proj. No. NH-030-1(35)R

Scale: As Noted Date: June, 2010

SHEET No. SB1.3 OF 4 SHEETS

FINAL DESIGN 276

FED. ROAD DIST. NO.	STATE	FED. AID PROJ. NO.	FISCAL YEAR	SHEET NO.	TOTAL SHEETS
HAWAII	HAW.	NH-030-1(35)R	2009	277	383

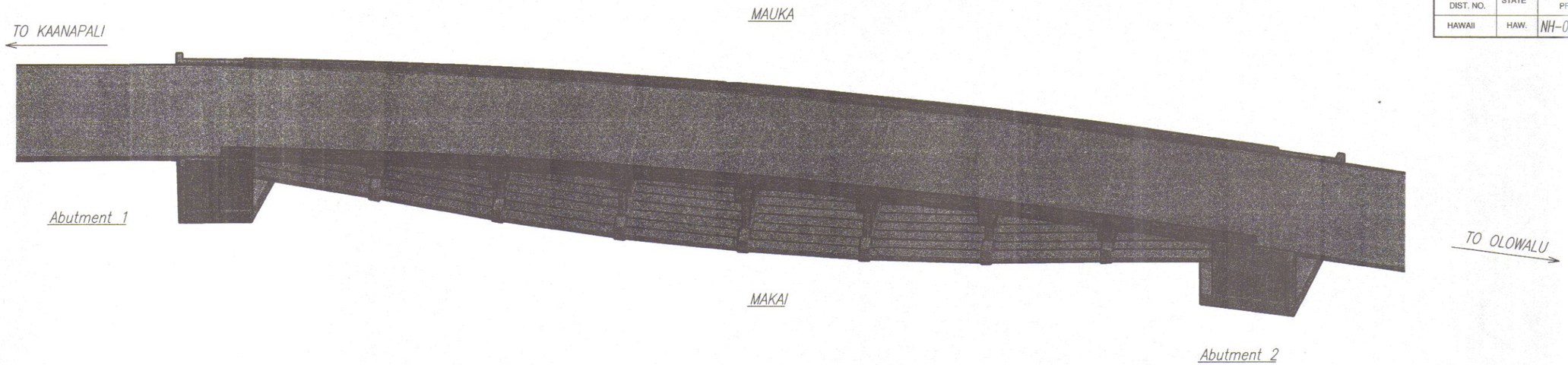

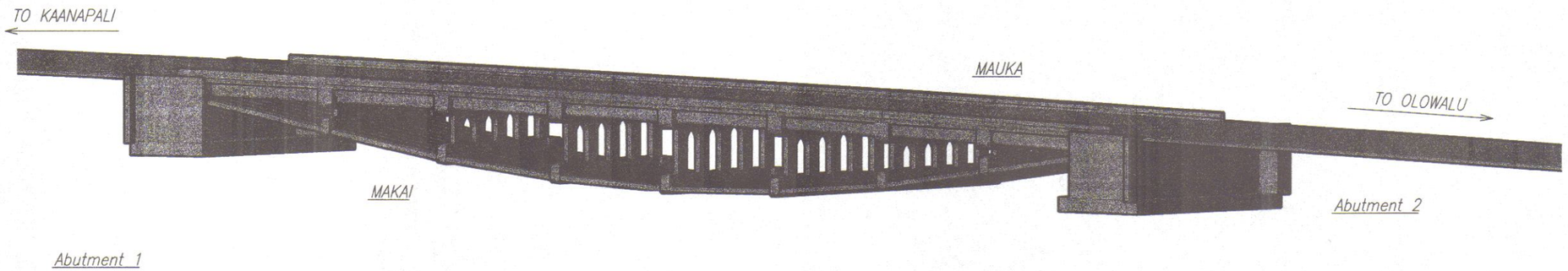

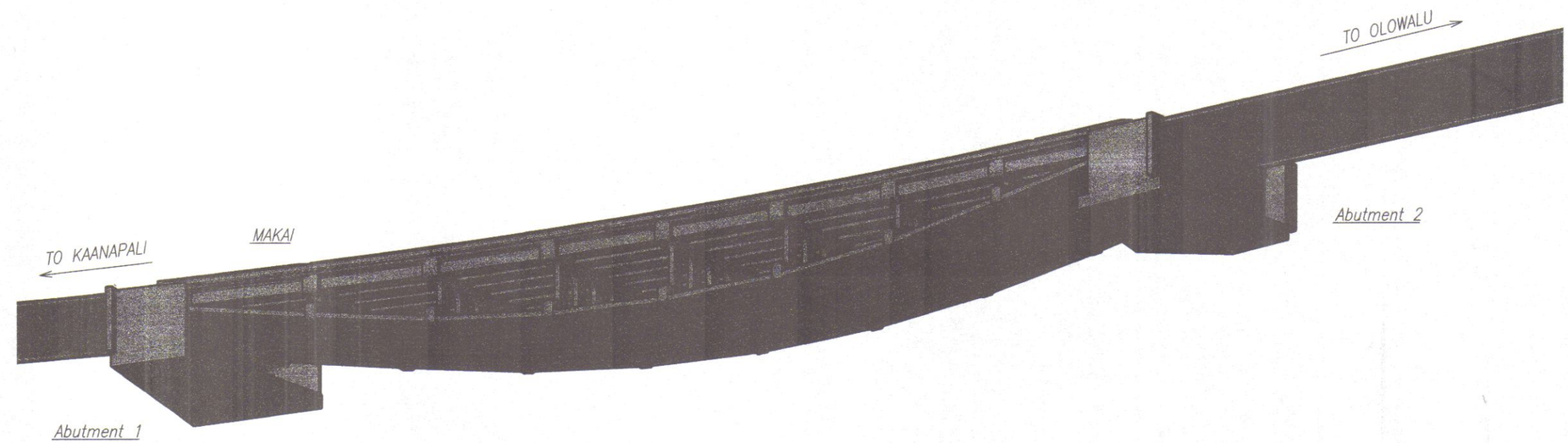

DAVID K. FUJIWARA
LICENSED PROFESSIONAL ENGINEER
NO. 8104-S
HAWAII, U.S.A.

THIS WORK WAS PREPARED BY ME OR UNDER MY SUPERVISION.

KSF, INC. APRIL 30, 2012 LIC. EXP. DATE

STATE OF HAWAII
DEPARTMENT OF TRANSPORTATION
HIGHWAYS DIVISION

KAHOMA STREAM BRIDGE MODELS

HONOAPIILANI HIGHWAY REALIGNMENT, PHASE 1A
Future Keawe St Extension to Lahainaluna Rd, Part B
Fed. Aid Proj. No. NH-030-1(35)R

Scale: None Date: June, 2010

SHEET No. SB1.4 OF 4 SHEETS

ORIGINAL PLAN	SURVEY PLOTTED BY	DATE
	DRAWN BY	
NOTE BOOK	TRACED BY	
	DESIGNED BY	
	QUANTITIES BY	
No.	CHECKED BY	

DRAWING NAME: Z:\00 ONGOING\40019.0-HONOAPIILANI LAHAINA BYPASS-KAHOMA WO\06-15-10 COMBINE LAHAINA FINAL DESIGN\HH-SB104.DWG PLOT TIME: 06-14-10, 2:50 PM)

FED. ROAD DIST. NO.	STATE	FED. AID PROJ. NO.	FISCAL YEAR	SHEET NO.	TOTAL SHEETS
HAWAII	HAW.	NH-030-1(35)R	2009	278	383

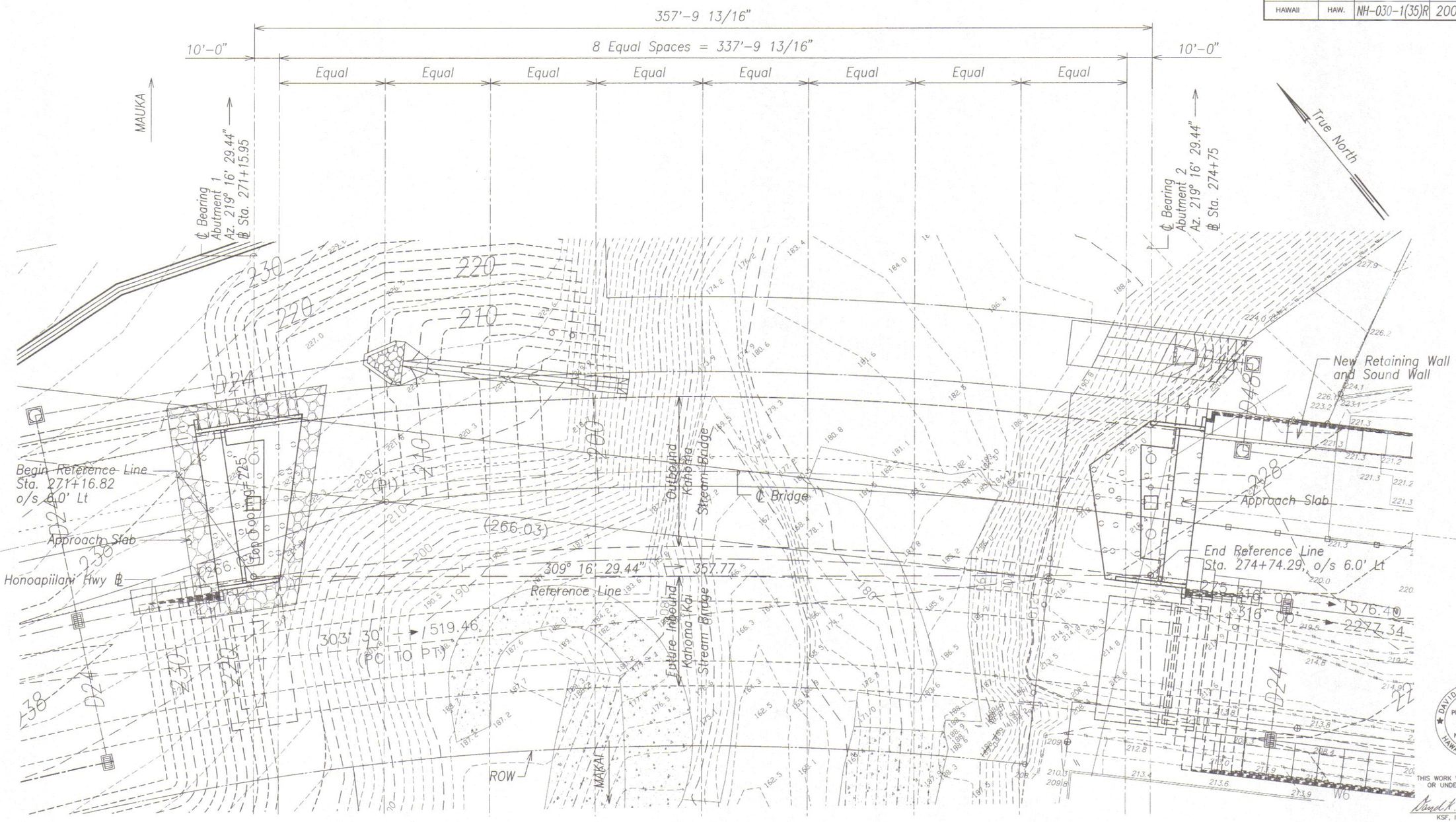

LEGEND:

○ Probe Hole Location, See Sheets SB8.3 and SB9.3 for spacing. See Special Provision Section 660.

KAHOMA STREAM BRIDGE FOUNDATION PLAN

Scale: 1" = 20'-0"

A
SB2.1 SB2.1

DAVID K. FUJIWARA
LICENSED PROFESSIONAL ENGINEER
NO. 8104-S
HAWAII, U.S.A.

THIS WORK WAS PREPARED BY ME OR UNDER MY SUPERVISION.

KSF, INC. — APRIL 30, 2012 LIC. EXP. DATE

STATE OF HAWAII
DEPARTMENT OF TRANSPORTATION
HIGHWAYS DIVISION

KAHOMA STREAM BRIDGE FOUNDATION PLAN

HONOAPIILANI HIGHWAY REALIGNMENT, PHASE 1A

Future Keawe St Extension to Lahainaluna Rd, Part B

Fed. Aid Proj. No. NH-030-1(35)R

Scale: As Noted — Date: June, 2010

SHEET No. SB2.1 OF 3 SHEETS

ORIGINAL PLAN — NOTE BOOK No. — SURVEY PLOTTED BY — DRAWN BY — TRACED BY — DESIGNED BY — QUANTITIES BY — CHECKED BY — DATE

DRAWING NAME: Z:\00 ONGOING\40019.0-HONOAPIILANI LAHAINA BYPASS-KAHOMA WO\05-15-10 COMBINE LAHAINA FINAL DESIGN\HH-SB201.DWG PLOT TIME: 06-14-10, 2:59 PM

FED. ROAD DIST. NO.	STATE	FED. AID PROJ. NO.	FISCAL YEAR	SHEET NO.	TOTAL SHEETS
HAWAII	HAW.	NH-030-1(35)R	2009	279	383

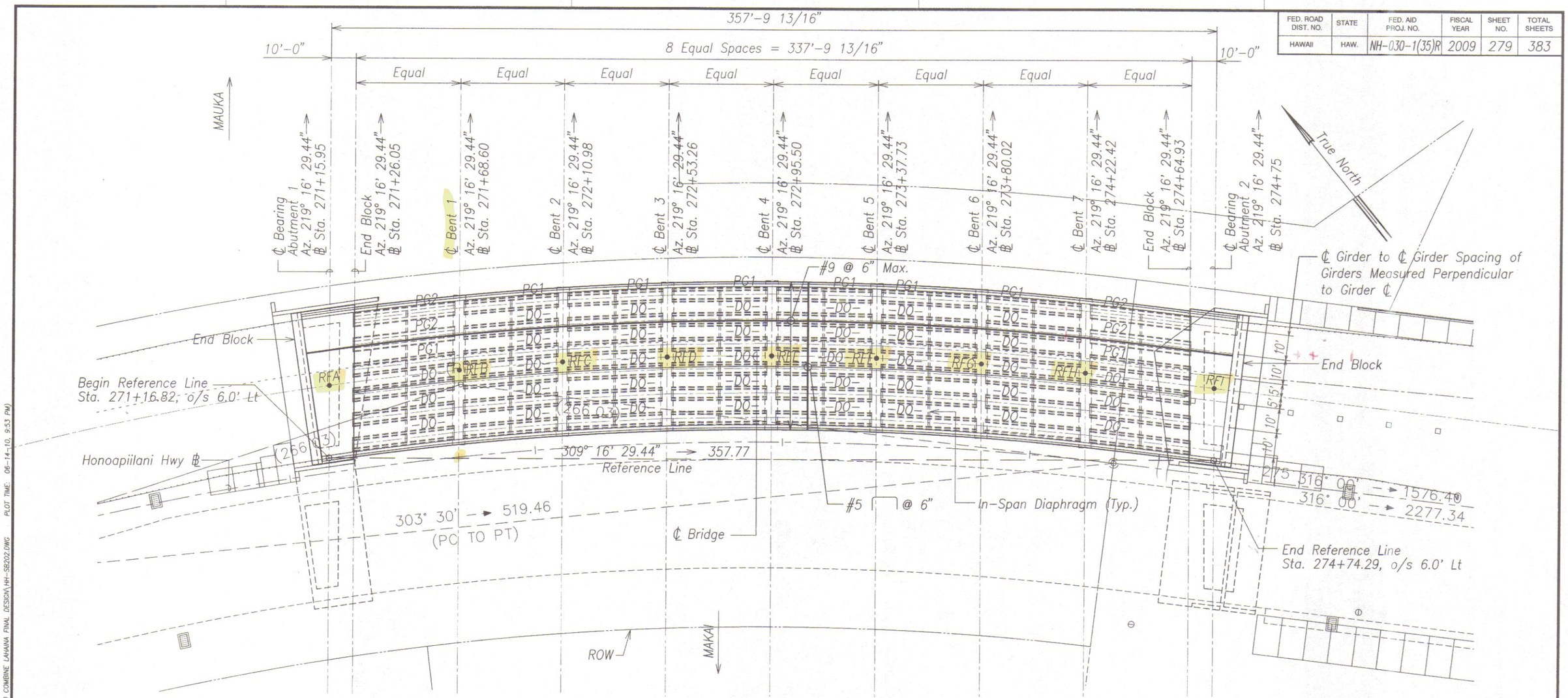

KAHOMA STREAM BRIDGE DECK FRAMING PLAN

Scale: 1" = 20'-0"

A SB2.2 | SB2.2

REFERENCE POINTS	
RFA	Honoapiilani Hwy ℄ Sta. 271+21.01 o/s 35'-0" Left
RFB	Honoapiilani Hwy ℄ Sta. 271+72.14 o/s 35'-0" Left
RFC	Honoapiilani Hwy ℄ Sta. 272+13.31 o/s 35'-0" Left
RFD	Honoapiilani Hwy ℄ Sta. 272+54.39 o/s 35'-0" Left
RFE	Honoapiilani Hwy ℄ Sta. 272+95.43 o/s 35'-0" Left
RFF	Honoapiilani Hwy ℄ Sta. 273+36.47 o/s 35'-0" Left
RFG	Honoapiilani Hwy ℄ Sta. 273+77.56 o/s 35'-0" Left
RFH	Honoapiilani Hwy ℄ Sta. 274+18.74 o/s 35'-0" Left
RFI	Honoapiilani Hwy ℄ Sta. 274+70.88 o/s 35'-0" Left

LEGEND:

PG Denotes Precast Girders. See SB5 Series for details.
BENT Denotes CIP Bent. See SB7 Series for details.

NOTES:

1. Span 1 Precast Girders are parallel w/ reference line between RFA and RFB.
2. Span 2 Precast Girders are parallel w/ reference line between RFB and RFC.
3. Span 3 Precast Girders are parallel w/ reference line between RFC and RFD.
4. Span 4 Precast Girders are parallel w/ reference line between RFD and RFE.
5. Span 5 Precast Girders are parallel w/ reference line between RFE and RFF.
6. Span 6 Precast Girders are parallel w/ reference line between RFF and RFG.
7. Span 7 Precast Girders are parallel w/ reference line between RFG and RFH.
8. Span 8 Precast Girders are parallel w/ reference line between RFH and RFI.
9. See SB6 Series for Arch Tie Plank information.
10. See SB4B.1, SB4B.2 and SB5B.1 through SB5B.3 for In-Span Diaphragm.

DAVID K. FUJIWARA LICENSED PROFESSIONAL ENGINEER NO. 8104-S HAWAII, U.S.A.

THIS WORK WAS PREPARED BY ME OR UNDER MY SUPERVISION.

KSF, INC. APRIL 30, 2012 LIC. EXP. DATE

STATE OF HAWAII
DEPARTMENT OF TRANSPORTATION
HIGHWAYS DIVISION

KAHOMA STREAM BRIDGE
DECK FRAMING PLAN

HONOAPIILANI HIGHWAY REALIGNMENT, PHASE 1A
Future Keawe St Extension to Lahainaluna Rd, Part B
Fed. Aid Proj. No. NH-030-1(35)R

Scale: As Noted Date: June, 2010

SHEET No. SB2.2 OF 3 SHEETS

ORIGINAL PLAN | NOTE BOOK No. | SURVEY PLOTTED BY | DRAWN BY | TRACED BY | DESIGNED BY | QUANTITIES BY | CHECKED BY | DATE

DRAWING NAME: Z:\00 ONGOING\40019.0-HONOAPIILANI LAHAINA BYPASS-KAHOMA WO\05-15-10 COMBINE LAHAINA FINAL DESIGN\HH-SB202.DWG PLOT TIME: 06-14-10, 9:53 PM

FINAL DESIGN 279

FED. ROAD DIST. NO.	STATE	FED. AID PROJ. NO.	FISCAL YEAR	SHEET NO.	TOTAL SHEETS
HAWAII	HAW.	NH-030-1(35)R	2009	280	383

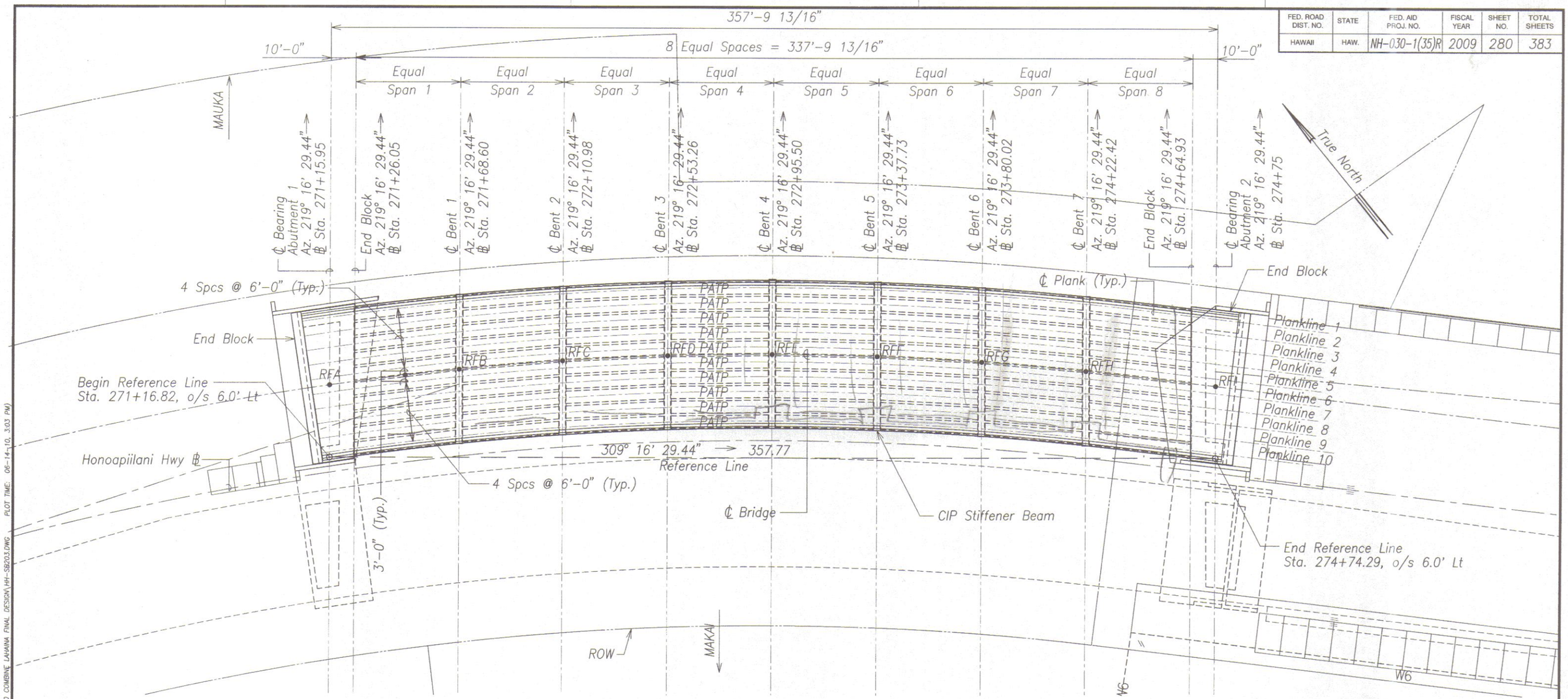

PRECAST ARCH TIE PLANK

Scale: 1" = 20'-0"

A SB2.3 | SB2.3

REFERENCE POINTS	
RFA	Honoapiilani Hwy ℄ Sta. 271+21.01 o/s 35'-0" Left
RFB	Honoapiilani Hwy ℄ Sta. 271+72.14 o/s 35'-0" Left
RFC	Honoapiilani Hwy ℄ Sta. 272+13.31 o/s 35'-0" Left
RFD	Honoapiilani Hwy ℄ Sta. 272+54.39 o/s 35'-0" Left
RFE	Honoapiilani Hwy ℄ Sta. 272+95.43 o/s 35'-0" Left
RFF	Honoapiilani Hwy ℄ Sta. 273+36.47 o/s 35'-0" Left
RFG	Honoapiilani Hwy ℄ Sta. 273+77.56 o/s 35'-0" Left
RFH	Honoapiilani Hwy ℄ Sta. 274+18.74 o/s 35'-0" Left
RFI	Honoapiilani Hwy ℄ Sta. 274+70.88 o/s 35'-0" Left

NOTES:

1. Span 1 Precast Arch Tie Planks (PATP) are parallel w/ reference line between RFA and RFB.
2. Span 2 Precast Arch Tie Planks (PATP) are parallel w/ reference line between RFB and RFC.
3. Span 3 Precast Arch Tie Planks (PATP) are parallel w/ reference line between RFC and RFD.
4. Span 4 Precast Arch Tie Planks (PATP) are parallel w/ reference line between RFD and RFE.
5. Span 5 Precast Arch Tie Planks (PATP) are parallel w/ reference line between RFE and RFF.
6. Span 6 Precast Arch Tie Planks (PATP) are parallel w/ reference line between RFF and RFG.
7. Span 7 Precast Arch Tie Planks (PATP) are parallel w/ reference line between RFG and RFH.
8. Span 8 Precast Arch Tie Planks (PATP) are parallel w/ reference line between RFH and RFI.
9. See SB6 Series for Precast Arch Tie Plank (PATP) information.
10. See SB7D Series for Stiffener Beam information.

DAVID K. FUJIWARA LICENSED PROFESSIONAL ENGINEER NO. 8104-S HAWAII, U.S.A.

THIS WORK WAS PREPARED BY ME OR UNDER MY SUPERVISION.

KSF, INC. APRIL 30, 2012 LIC. EXP. DATE

STATE OF HAWAII
DEPARTMENT OF TRANSPORTATION
HIGHWAYS DIVISION

KAHOMA STREAM BRIDGE
PRECAST ARCH TIE PLANK
HONOAPIILANI HIGHWAY REALIGNMENT, PHASE 1A
Future Keawe St Extension to Lahainaluna Rd, Part B
Fed. Aid Proj. No. NH-030-1(35)R

Scale: As Noted Date: June, 2010

SHEET No. SB2.3 OF 3 SHEETS

ORIGINAL PLAN | NOTE BOOK No. | SURVEY PLOTTED BY | DRAWN BY | TRACED BY | DESIGNED BY | QUANTITIES BY | CHECKED BY | DATE

DRAWING NAME: Z:\00 ONGOING\40019.0-HONOAPIILANI LAHAINA BYPASS-KAHOMA WO\06-15-10 COMBINE LAHAINA FINAL DESIGN\HH-SB203.DWG PLOT TIME: 06-14-10, 3:03 PM

FED. ROAD DIST. NO.	STATE	FED. AID PROJ. NO.	FISCAL YEAR	SHEET NO.	TOTAL SHEETS
HAWAII	HAW.	NH-030-1(35)R	2009	281	383

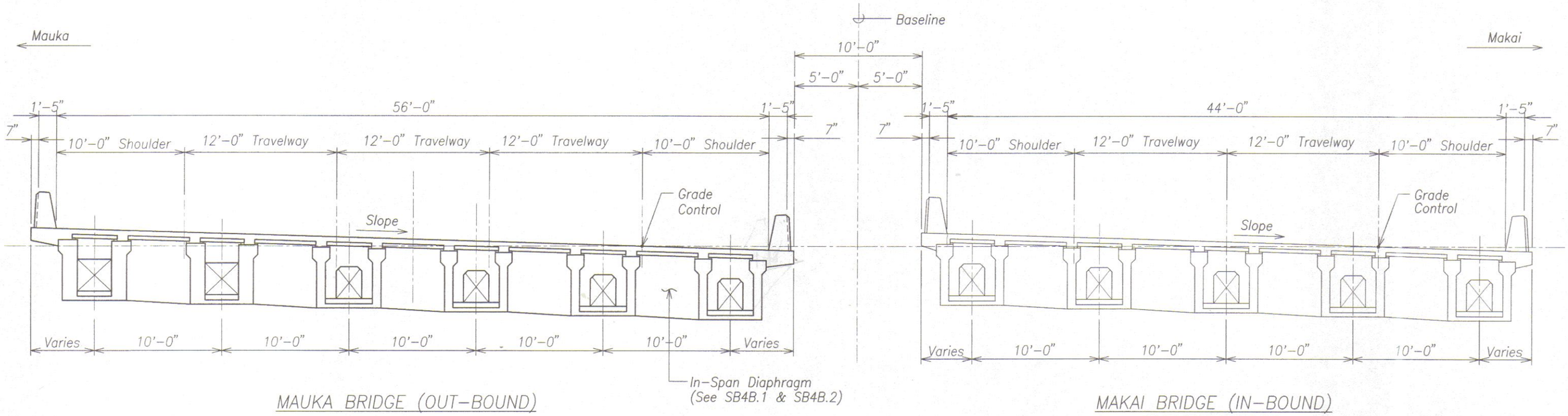

MAUKA BRIDGE (OUT-BOUND)

MAKAI BRIDGE (IN-BOUND)
FUTURE BRIDGE

NOTES:

1. See Civil sheets for Superelevation of Finish Grade.
2. Dimensions for Girder spacing is measured perpendicular to Girder.

TYPICAL SECTION (A / SB3.1 | SB3.1)
Scale: 1/4" = 1'-0"

DAVID K. FUJIWARA
LICENSED PROFESSIONAL ENGINEER
NO. 8104-S
HAWAII, U.S.A.

THIS WORK WAS PREPARED BY ME OR UNDER MY SUPERVISION.

David K. Fujiwara — APRIL 30, 2012
KSF, INC. — LIC. EXP. DATE

STATE OF HAWAII
DEPARTMENT OF TRANSPORTATION
HIGHWAYS DIVISION

TYPICAL SECTION

HONOAPIILANI HIGHWAY REALIGNMENT, PHASE 1A
Future Keawe St Extension to Lahainaluna Rd, Part B
Fed. Aid Proj. No. NH-030-1(35)R

Scale: As Noted — Date: June, 2010

SHEET No. SB3.1 OF 10 SHEETS

FINAL DESIGN 281

ORIGINAL PLAN	SURVEY PLOTTED BY	DATE
	DRAWN BY	"
NOTE BOOK	TRACED BY	"
	DESIGNED BY	"
No.	QUANTITIES BY	"
	CHECKED BY	"

DRAWING NAME: Z:\00 ONGOING\40019.0-HONOAPIILANI LAHAINA BYPASS-KAHOMA WO\06-15-10 COMBINE LAHAINA FINAL DESIGN\HH-SB301.DWG PLOT TIME: 06-14-10, 3:04 PM

FED. ROAD DIST. NO.	STATE	FED. AID PROJ. NO.	FISCAL YEAR	SHEET NO.	TOTAL SHEETS
HAWAII	HAW.	NH-030-1(35)R	2009	282	383

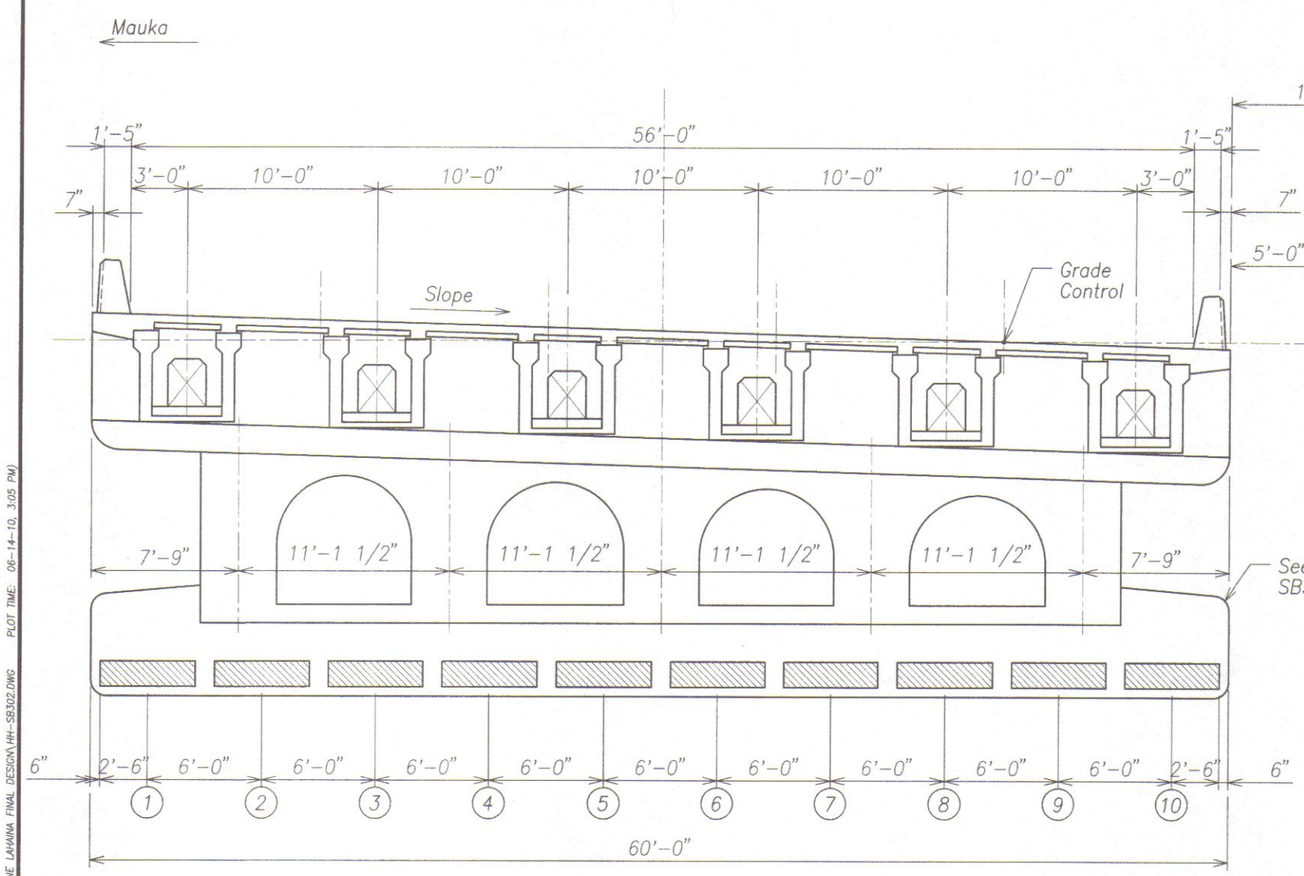

MAUKA BRIDGE (OUT-BOUND)

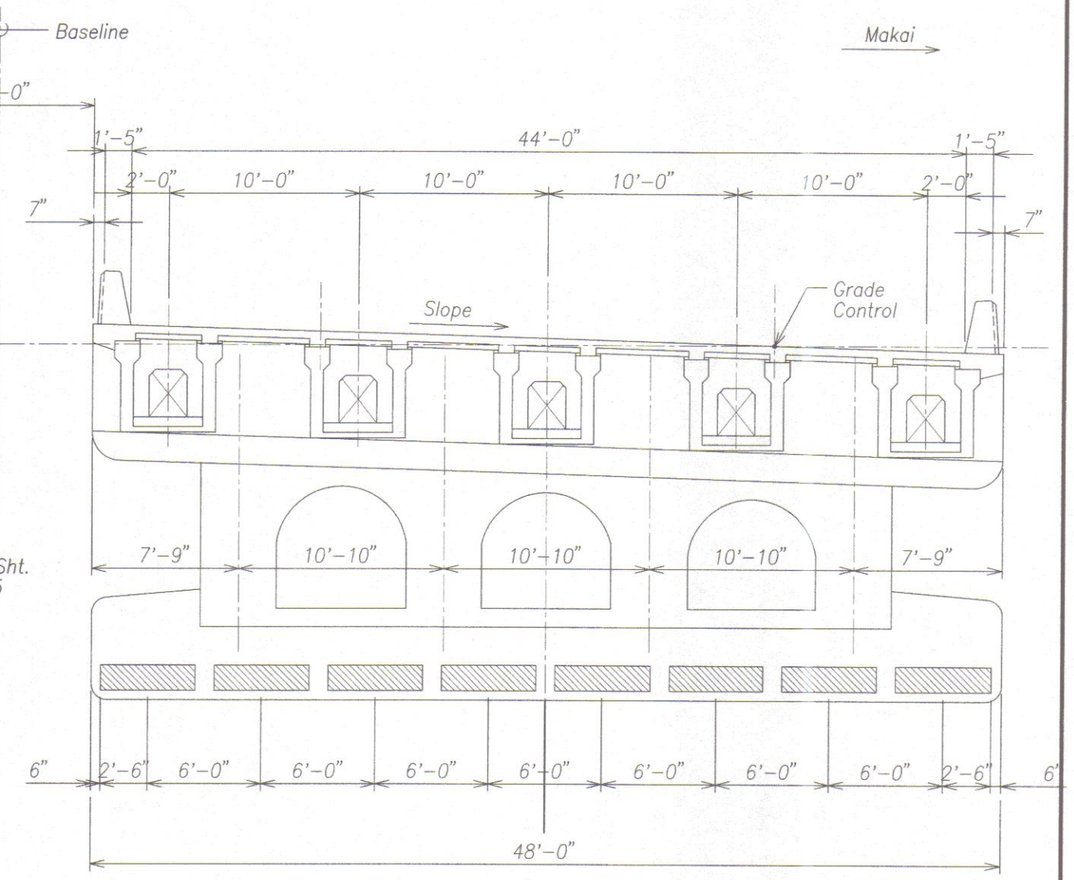

MAKAI BRIDGE (IN-BOUND)
FUTURE BRIDGE

LEGEND:

(1) – Denotes PATP Line Number

TYPICAL SECTION AT BENT (A)

Scale: 1/4" = 1'-0"

SB3.2 | SB3.2

DAVID K. FUJIWARA
LICENSED PROFESSIONAL ENGINEER
NO. 8104-S
HAWAII, U.S.A.

THIS WORK WAS PREPARED BY ME OR UNDER MY SUPERVISION.

KSF, INC. — APRIL 30, 2012 LIC. EXP. DATE

STATE OF HAWAII
DEPARTMENT OF TRANSPORTATION
HIGHWAYS DIVISION

TYPICAL SECTION AT BENT

HONOAPIILANI HIGHWAY REALIGNMENT, PHASE 1A
Future Keawe St Extension to Lahainaluna Rd, Part B
Fed. Aid Proj. No. NH-030-1(35)R

Scale: As Noted — Date: June, 2010

SHEET No. SB3.2 OF 10 SHEETS

FINAL DESIGN 282

ORIGINAL PLAN | NOTE BOOK No. | SURVEY PLOTTED BY | DRAWN BY | TRACED BY | DESIGNED BY | QUANTITIES BY | CHECKED BY | DATE

DRAWING NAME: Z:\00 ONGOING\40019.0-HONOAPIILANI LAHAINA BYPASS-KAHOMA WO\06-15-10 COMBINE LAHAINA FINAL DESIGN\HH-SB302.DWG PLOT TIME: 06-14-10, 3:05 PM

FED. ROAD DIST. NO.	STATE	FED. AID PROJ. NO.	FISCAL YEAR	SHEET NO.	TOTAL SHEETS
HAWAII	HAW.	NH-030-1(35)R	2009	283	383

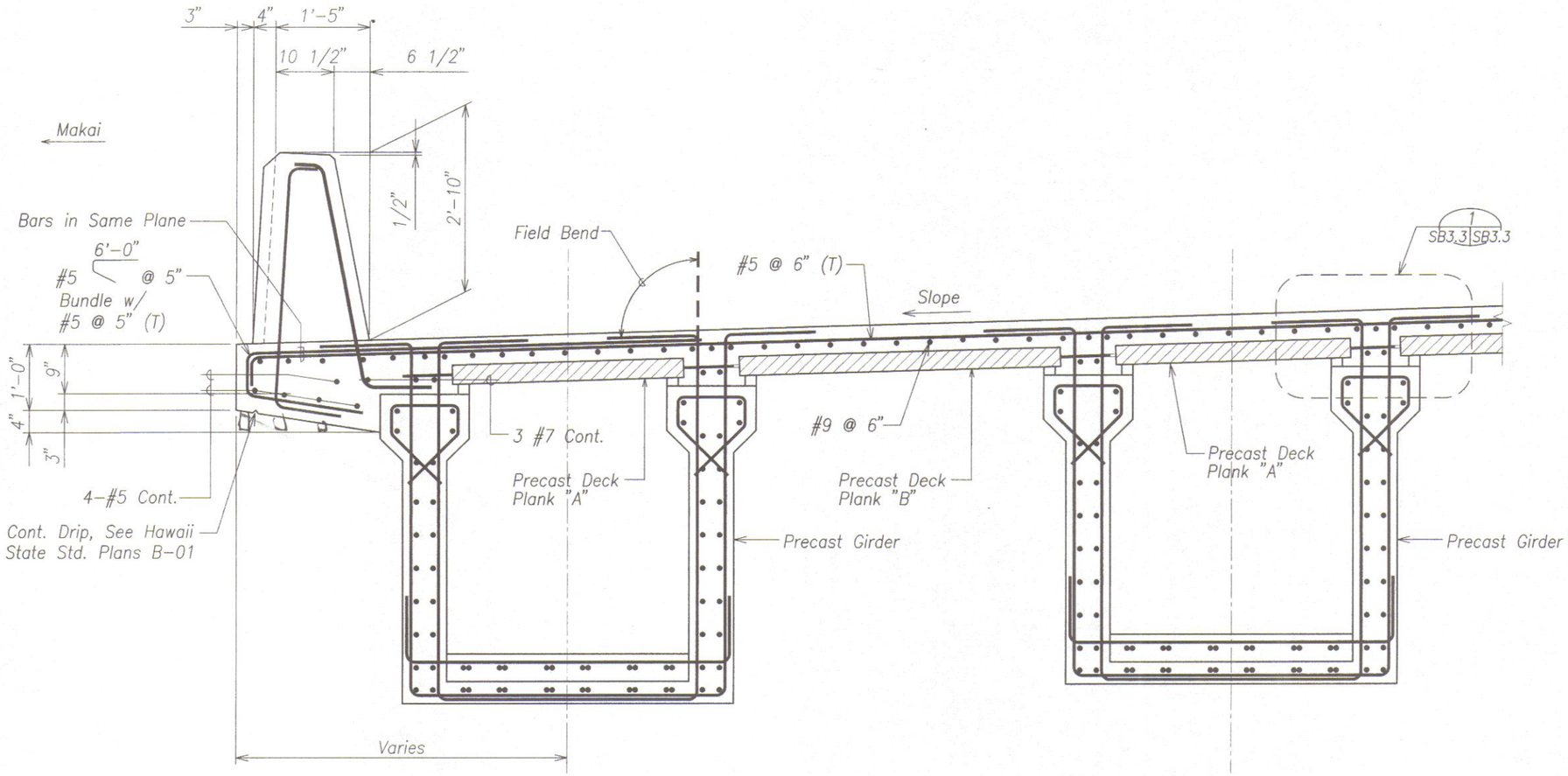

TYPICAL SECTION A
Scale: 1" = 1'-0" SB3.3 SB3.3

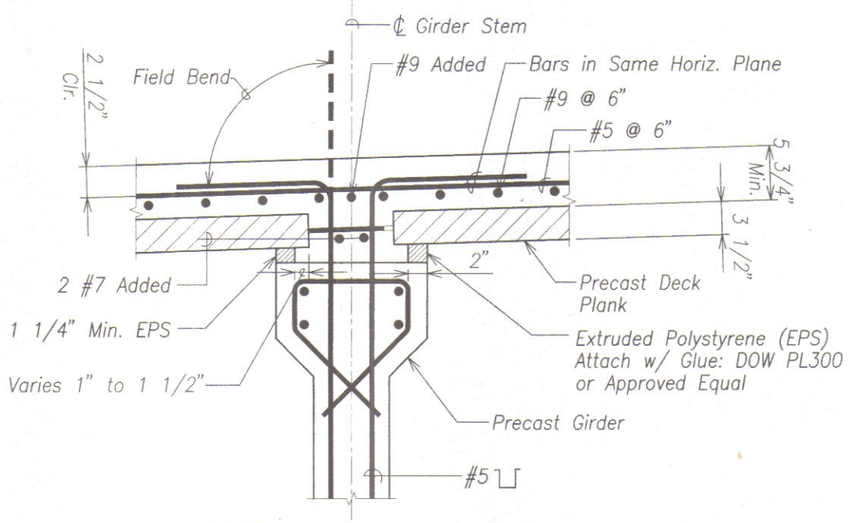

DETAIL 1
Scale: 1 1/2" = 1'-0" SB3.3 SB3.3

NOTES:

1. See Sheet SB4A.1 for Precast Deck Plank details.
2. See Sheets SB5.1 through SB5.4 for Precast Girder details.

DAVID K. FUJIWARA
LICENSED PROFESSIONAL ENGINEER
NO. 8104-S
HAWAII, U.S.A.

THIS WORK WAS PREPARED BY ME OR UNDER MY SUPERVISION.

KSF, INC. APRIL 30, 2012
LIC. EXP. DATE

STATE OF HAWAII
DEPARTMENT OF TRANSPORTATION
HIGHWAYS DIVISION

TYPICAL SECTION

HONOAPIILANI HIGHWAY REALIGNMENT, PHASE 1A
Future Keawe St Extension to Lahainaluna Rd, Part B
Fed. Aid Proj. No. NH-030-1(35)R

Scale: As Noted Date: June, 2010

SHEET No. SB3.3 OF 10 SHEETS

FINAL DESIGN 283

ORIGINAL PLAN | SURVEY PLOTTED BY | DRAWN BY | TRACED BY | DESIGNED BY | QUANTITIES BY | CHECKED BY | DATE | NOTE BOOK No.

DRAWING NAME: Z:\DO ONGOING\40019.0-HONOAPIILANI LAHAINA BYPASS-KAHOMA WO\06-15-10 COMBINE LAHAINA FINAL DESIGN\HH-SB303.DWG PLOT TIME: 06-14-10, 3:05 PM

FED. ROAD DIST. NO.	STATE	FED. AID PROJ. NO.	FISCAL YEAR	SHEET NO.	TOTAL SHEETS
HAWAII	HAW.	NH-030-1(35)R	2009	284	383

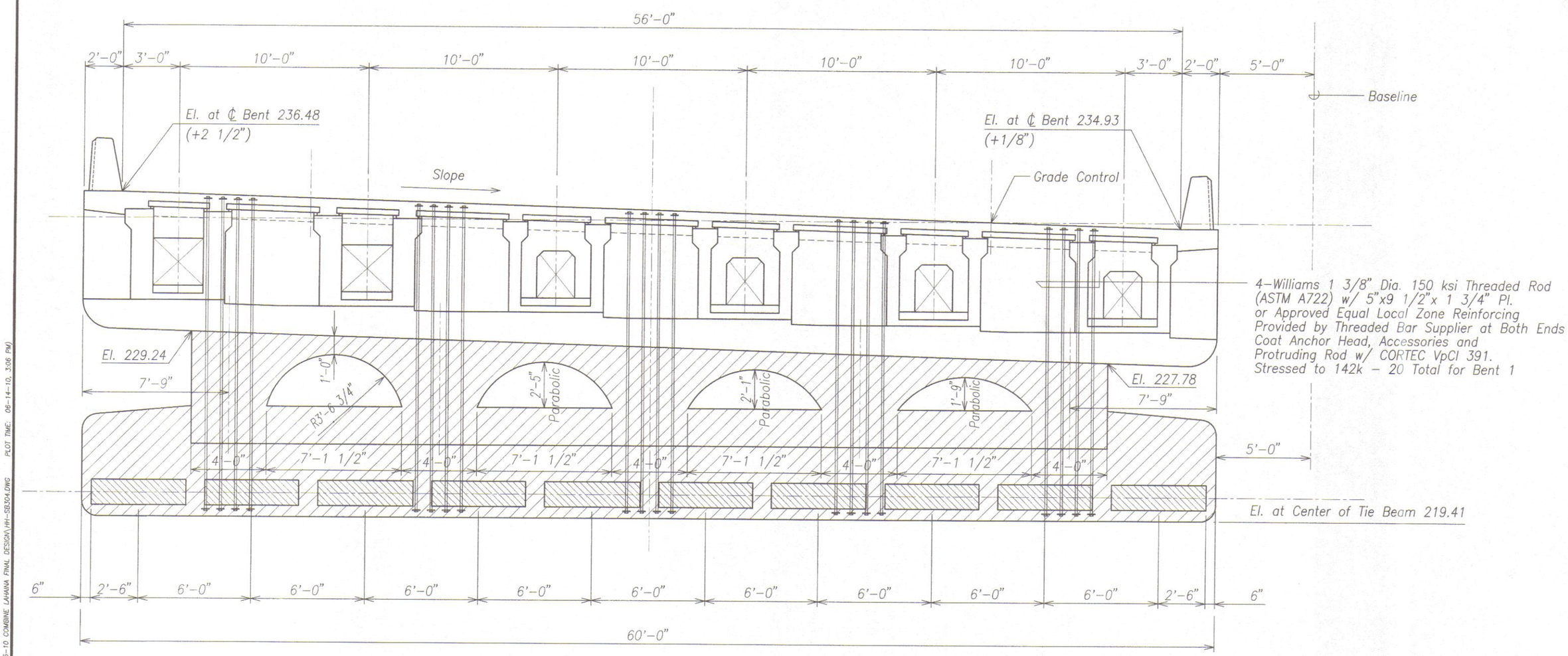

NOTE:

Elevations and dimensions shown are design and theoretical values and do not include the effects of camber. Camber value are in ( ).
For elevations and dimensions to be used for construction, refer to Form drawings.

LEGEND:

Indicates "Special" Concrete - High Concentration of Fibers

MAUKA BRIDGE (OUT-BOUND)

BENT 1 ELEVATION

Scale: 3/8" = 1'-0"

A
SB3.4 SB3.4

DAVID K. FUJIWARA
LICENSED PROFESSIONAL ENGINEER
NO. 8104-S
HAWAII, U.S.A.

THIS WORK WAS PREPARED BY ME OR UNDER MY SUPERVISION.

KSF, INC. APRIL 30, 2012 LIC. EXP. DATE

STATE OF HAWAII
DEPARTMENT OF TRANSPORTATION
HIGHWAYS DIVISION

BENT ELEVATION

HONOAPIILANI HIGHWAY REALIGNMENT, PHASE 1A
Future Keawe St Extension to Lahainaluna Rd, Part B
Fed. Aid Proj. No. NH-030-1(35)R

Scale: As Noted Date: June, 2010

SHEET No. SB3.4 OF 10 SHEETS

ORIGINAL PLAN | SURVEY PLOTTED BY | DRAWN BY | TRACED BY | DESIGNED BY | QUANTITIES BY | CHECKED BY | DATE
NOTE BOOK No.

DRAWING NAME: Z:\OD ONGOING\40019.0-HONOAPIILANI LAHAINA BYPASS-KAHOMA WO\06-15-10 COMBINE LAHAINA FINAL DESIGN\HH-SB304.DWG PLOT TIME: 06-14-10, 3:06 PM

FINAL DESIGN 284

FED. ROAD DIST. NO.	STATE	FED. AID PROJ. NO.	FISCAL YEAR	SHEET NO.	TOTAL SHEETS
HAWAII	HAW.	NH-030-1(35)R	2009	285	383

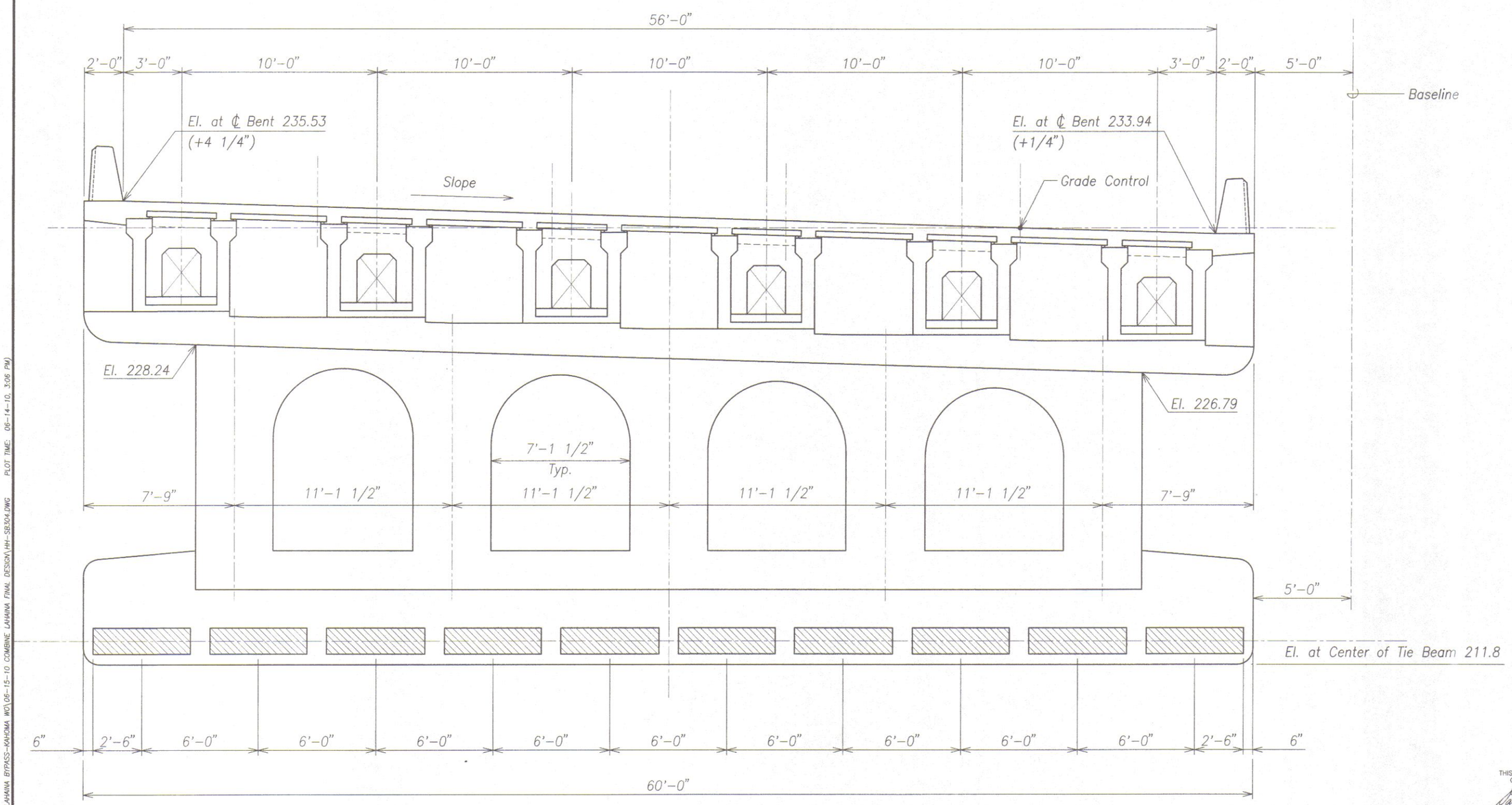

NOTE:

Elevations and dimensions shown are design and theoretical values and do not include the effects of camber. Camber value are in ( ).
For elevations and dimensions to be used for construction, refer to Form drawings.

MAUKA BRIDGE (OUT-BOUND)

BENT 2 ELEVATION

Scale: 3/8" = 1'-0"

A
SB3.5 | SB3.5

DAVID K. FUJIWARA
LICENSED PROFESSIONAL ENGINEER
NO. 8104-S
HAWAII, U.S.A.

THIS WORK WAS PREPARED BY ME OR UNDER MY SUPERVISION.

KSF, INC. — APRIL 30, 2012 LIC. EXP. DATE

STATE OF HAWAII
DEPARTMENT OF TRANSPORTATION
HIGHWAYS DIVISION

BENT ELEVATION

HONOAPIILANI HIGHWAY REALIGNMENT, PHASE 1A
Future Keawe St Extension to Lahainaluna Rd, Part B
Fed. Aid Proj. No. NH-030-1(35)R

Scale: As Noted — Date: June, 2010

SHEET No. SB3.5 OF 10 SHEETS

ORIGINAL PLAN | NOTE BOOK No. | SURVEY PLOTTED BY | DRAWN BY | TRACED BY | DESIGNED BY | QUANTITIES BY | CHECKED BY | DATE

DRAWING NAME: Z:\00_ONGOING\40019.0-HONOAPIILANI LAHAINA BYPASS-KAHOMA WG\06-15-10 COMBINE LAHAINA FINAL DESIGN\HH-SB304.DWG PLOT TIME: 06-14-10, 3:06 PM

FED. ROAD DIST. NO.	STATE	FED. AID PROJ. NO.	FISCAL YEAR	SHEET NO.	TOTAL SHEETS
HAWAII	HAW.	NH-030-1(35)R	2009	286	383

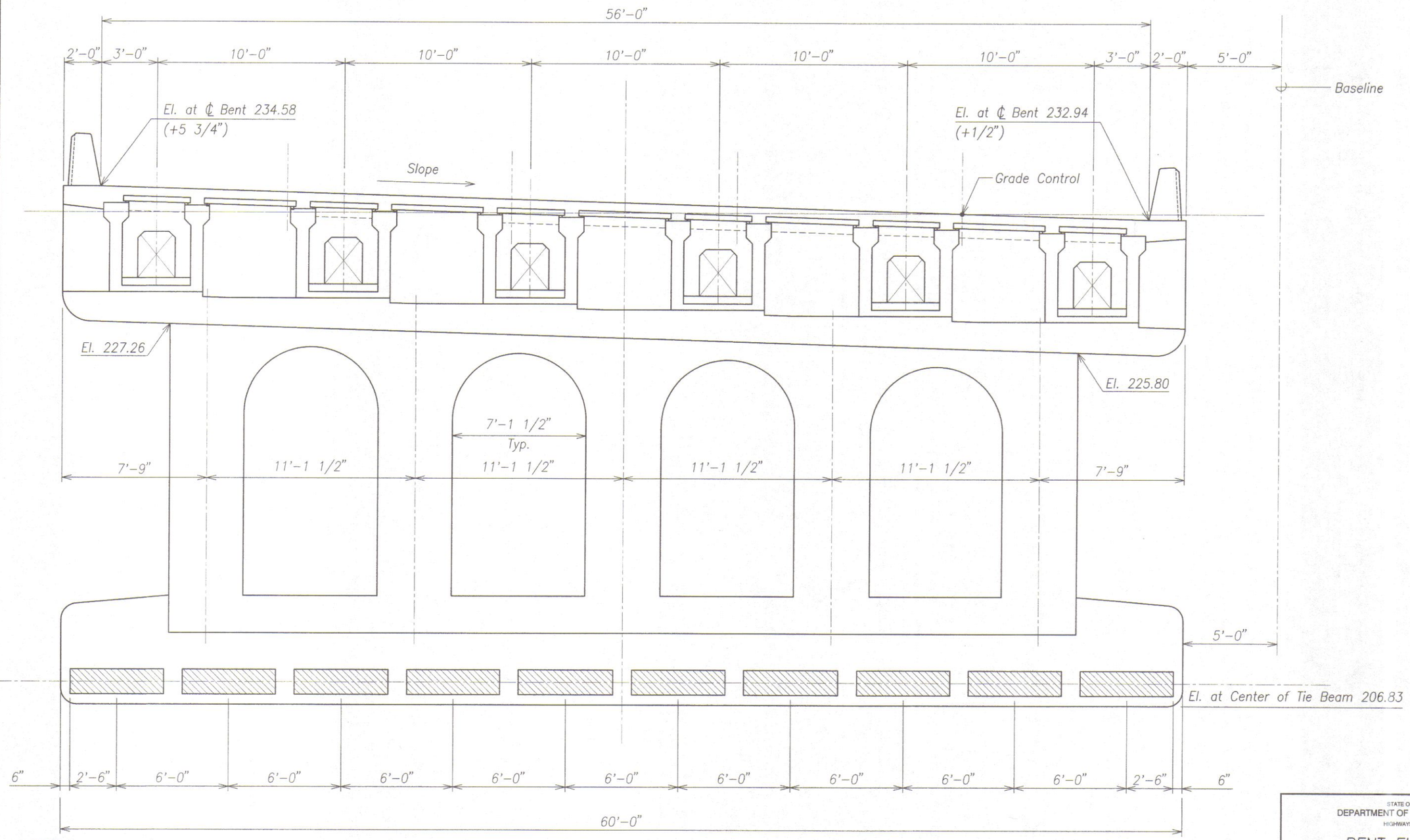

NOTE:

Elevations and dimensions shown are design and theoretical values and do not include the effects of camber. Camber value are in ( ).
For elevations and dimensions to be used for construction, refer to Form drawings.

MAUKA BRIDGE (OUT-BOUND)

BENT 3 ELEVATION

Scale: 3/8" = 1'-0"

A
SB3.6 | SB3.6

DAVID K. FUJIWARA
LICENSED PROFESSIONAL ENGINEER
NO. 8104-S
HAWAII, U.S.A.

THIS WORK WAS PREPARED BY ME OR UNDER MY SUPERVISION.

KSF, INC. APRIL 30, 2012
LIC. EXP. DATE

STATE OF HAWAII
DEPARTMENT OF TRANSPORTATION
HIGHWAYS DIVISION

BENT ELEVATION

HONOAPIILANI HIGHWAY REALIGNMENT, PHASE 1A
Future Keawe St Extension to Lahainaluna Rd, Part B
Fed. Aid Proj. No. NH-030-1(35)R

Scale: As Noted Date: June, 2010

SHEET No. SB3.6 OF 10 SHEETS

FINAL DESIGN 286

ORIGINAL PLAN | SURVEY PLOTTED BY | DRAWN BY | TRACED BY | DESIGNED BY | QUANTITIES BY | CHECKED BY | DATE
NOTE BOOK No.

DRAWING NAME: Z:\00 ONGOING\40019.0-HONOAPIILANI LAHAINA BYPASS-KAHOMA WO\06-15-10 COMBINE LAHAINA FINAL DESIGN\HI-SB304.DWG PLOT TIME: 06-14-10, 3:07 PM

FED. ROAD DIST. NO.	STATE	FED. AID PROJ. NO.	FISCAL YEAR	SHEET NO.	TOTAL SHEETS
HAWAII	HAW.	NH-030-1(35)R	2009	287	383

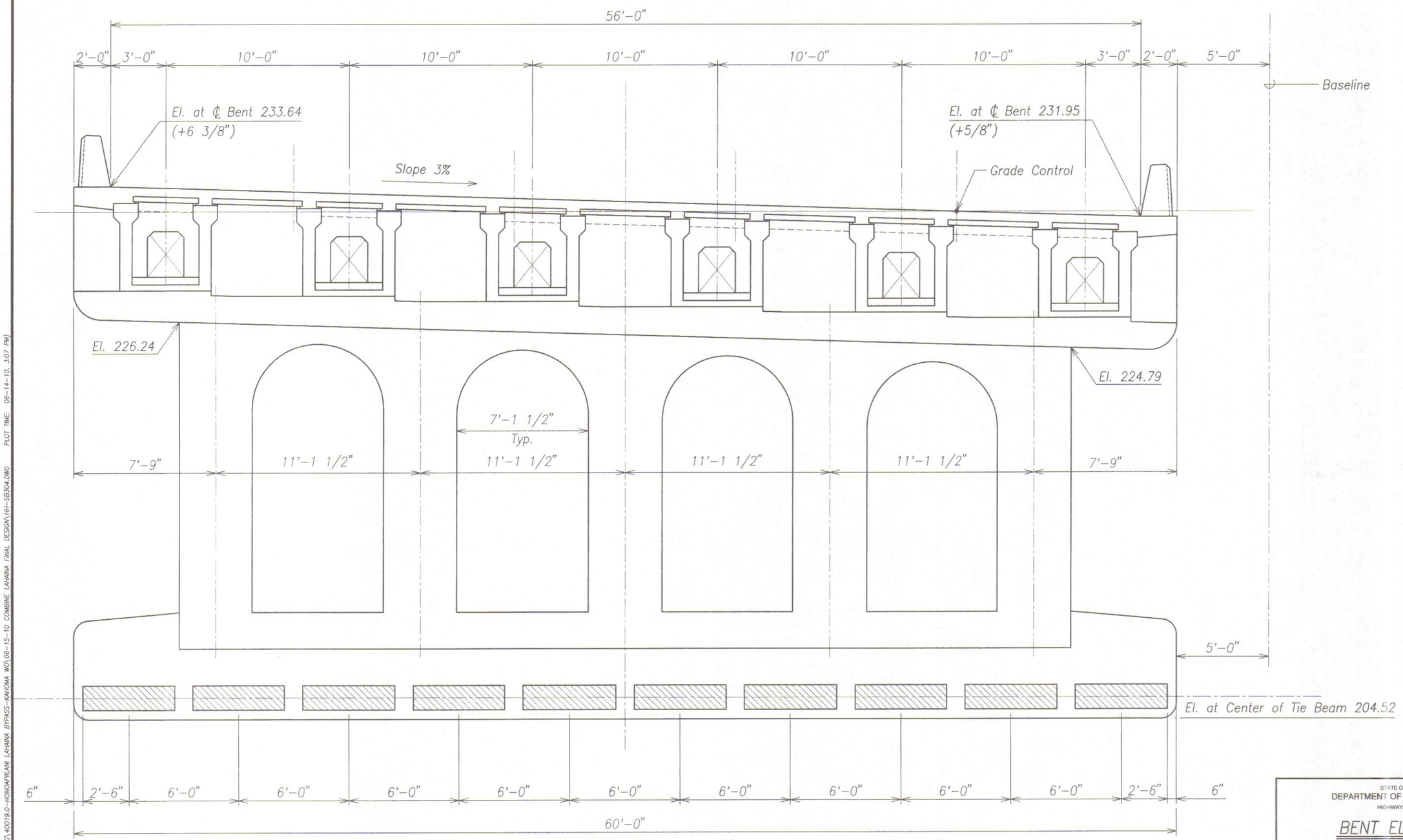

NOTE:

Elevations and dimensions shown are design and theoretical values and do not include the effects of camber. Camber value are in ( ).
For elevations and dimensions to be used for construction, refer to Form drawings.

MAUKA BRIDGE (OUT-BOUND)

BENT 4 ELEVATION (A / SB3.7 | SB3.7)

Scale: 3/8" = 1'-0"

DAVID K. FUJIWARA LICENSED PROFESSIONAL ENGINEER NO. 8104-S HAWAII, U.S.A.

THIS WORK WAS PREPARED BY ME OR UNDER MY SUPERVISION.

KSF, INC. — APRIL 30, 2012 LIC. EXP. DATE

STATE OF HAWAII
DEPARTMENT OF TRANSPORTATION
HIGHWAYS DIVISION

BENT ELEVATION

HONOAPIILANI HIGHWAY REALIGNMENT, PHASE 1A
Future Keawe St Extension to Lahainaluna Rd, Part B
Fed. Aid Proj. No. NH-030-1(35)R

Scale: As Noted — Date: June, 2010

SHEET No. SB3.7 OF 10 SHEETS

FINAL DESIGN 287

ORIGINAL PLAN | NOTE BOOK No. | SURVEY PLOTTED BY | DRAWN BY | TRACED BY | DESIGNED BY | QUANTITIES BY | CHECKED BY | DATE

DRAWING NAME: Z:\00 ONGOING\40019.0-HONOAPIILANI LAHAINA BYPASS-KAHOMA WO\06-15-10 COMBINE LAHAINA FINAL DESIGN\HH-SB304.DWG PLOT TIME: 06-14-10, 3:07 PM)

FED. ROAD DIST. NO.	STATE	FED. AID PROJ. NO.	FISCAL YEAR	SHEET NO.	TOTAL SHEETS
HAWAII	HAW.	NH-030-1(35)R	2009	288	383

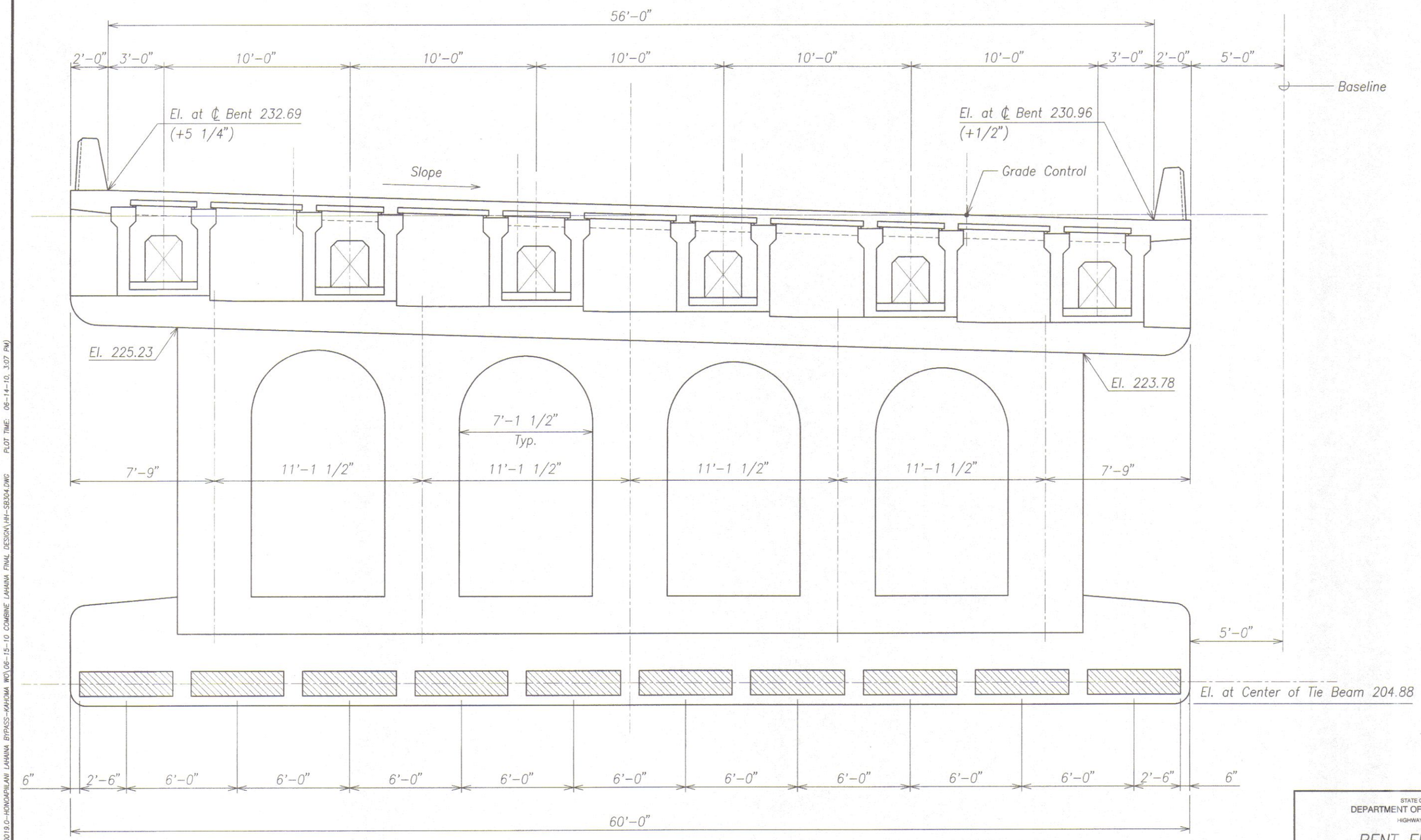

NOTE:

Elevations and dimensions shown are design and theoretical values and do not include the effects of camber. Camber value are in ( ).
For elevations and dimensions to be used for construction, refer to Form drawings.

MAUKA BRIDGE (OUT-BOUND)

BENT 5 ELEVATION (A / SB3.8 | SB3.8)

Scale: 3/8" = 1'-0"

DAVID K. FUJIWARA LICENSED PROFESSIONAL ENGINEER NO. 8104-S HAWAII, U.S.A.

THIS WORK WAS PREPARED BY ME OR UNDER MY SUPERVISION.

KSF, INC. APRIL 30, 2012 LIC. EXP. DATE

STATE OF HAWAII
DEPARTMENT OF TRANSPORTATION
HIGHWAYS DIVISION

BENT ELEVATION

HONOAPIILANI HIGHWAY REALIGNMENT, PHASE 1A
Future Keawe St Extension to Lahainaluna Rd, Part B
Fed. Aid Proj. No. NH-030-1(35)R

Scale: As Noted Date: June, 2010

SHEET No. SB3.8 OF 10 SHEETS

FINAL DESIGN 288

ORIGINAL PLAN | SURVEY PLOTTED BY | DRAWN BY | TRACED BY | DESIGNED BY | QUANTITIES BY | CHECKED BY | DATE
NOTE BOOK No.

DRAWING NAME: Z:\00 ONGOING\40019.0-HONOAPIILANI LAHAINA BYPASS-KAHOMA WO\06-15-10 COMBINE LAHAINA FINAL DESIGN\HH-SB304.DWG PLOT TIME: 06-14-10, 3:07 PM

FED. ROAD DIST. NO.	STATE	FED. AID PROJ. NO.	FISCAL YEAR	SHEET NO.	TOTAL SHEETS
HAWAII	HAW.	NH-030-1(35)R	2009	289	383

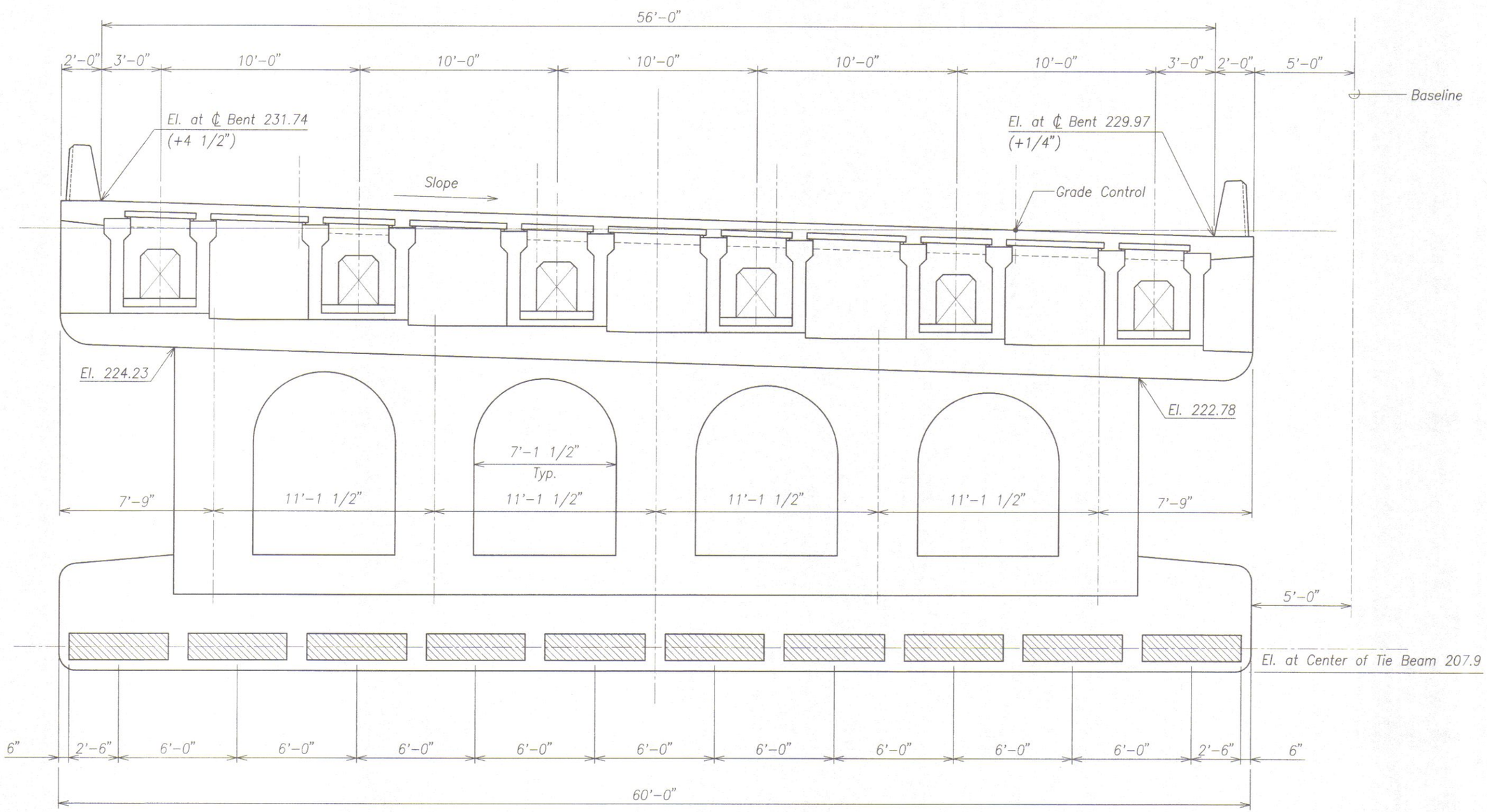

MAUKA BRIDGE (OUT-BOUND)

BENT 6 ELEVATION (A SB3.9 | SB3.9)

Scale: 3/8" = 1'-0"

NOTE:

Elevations and dimensions shown are design and theoretical values and do not include the effects of camber. Camber value are in ( ).
For elevations and dimensions to be used for construction, refer to Form drawings.

DAVID K. FUJIWARA LICENSED PROFESSIONAL ENGINEER NO. 8104-S HAWAII, U.S.A.

THIS WORK WAS PREPARED BY ME OR UNDER MY SUPERVISION.

KSF, INC. APRIL 30, 2012 LIC. EXP. DATE

STATE OF HAWAII
DEPARTMENT OF TRANSPORTATION
HIGHWAYS DIVISION

BENT ELEVATION

HONOAPIILANI HIGHWAY REALIGNMENT, PHASE 1A
Future Keawe St Extension to Lahainaluna Rd, Part B
Fed. Aid Proj. No. NH-030-1(35)R

Scale: As Noted Date: June, 2010

SHEET No. SB3.9 OF 10 SHEETS

FINAL DESIGN 289

ORIGINAL PLAN | SURVEY PLOTTED BY | DRAWN BY | TRACED BY | DESIGNED BY | QUANTITIES BY | CHECKED BY | DATE | NOTE BOOK No.

DRAWING NAME: Z:\00 ONGOING\40019.0-HONOAPIILANI LAHAINA BYPASS-KAHOMA WO\06-15-10 COMBINE LAHAINA FINAL DESIGN\HH-SB304.DWG PLOT TIME: 06-14-10, 3:07 PM)

FED. ROAD DIST. NO.	STATE	FED. AID PROJ. NO.	FISCAL YEAR	SHEET NO.	TOTAL SHEETS
HAWAII	HAW.	NH-030-1(35)R	2009	290	383

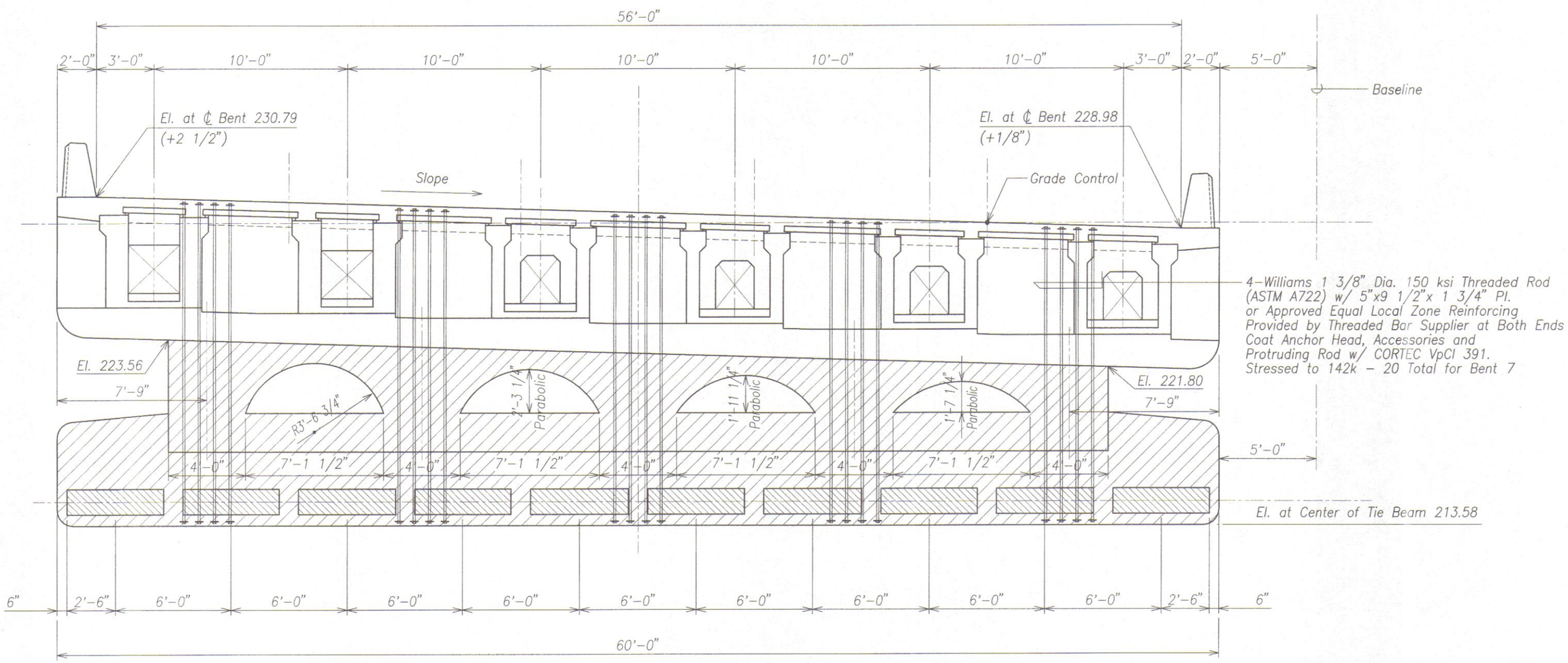

NOTE:

Elevations and dimensions shown are design and theoretical values and do not include the effects of camber. Camber value are in ( ).
For elevations and dimensions to be used for construction, refer to Form drawings.

LEGEND:

Indicates "Special" Concrete – High Concentration of Fibers

MAUKA BRIDGE (OUT-BOUND)

BENT 7 ELEVATION

Scale: 3/8" = 1'-0"

A
SB3.10 SB3.10

DAVID K. FUJIWARA
LICENSED PROFESSIONAL ENGINEER
NO. 8104-S
HAWAII, U.S.A.

THIS WORK WAS PREPARED BY ME OR UNDER MY SUPERVISION.

KSF, INC.

APRIL 30, 2012
LIC. EXP. DATE

STATE OF HAWAII
DEPARTMENT OF TRANSPORTATION
HIGHWAYS DIVISION

BENT ELEVATION

HONOAPIILANI HIGHWAY REALIGNMENT, PHASE 1A
Future Keawe St Extension to Lahainaluna Rd, Part B
Fed. Aid Proj. No. NH-030-1(35)R

Scale: As Noted Date: June, 2010

SHEET No. SB3.10 OF 10 SHEETS

ORIGINAL PLAN	SURVEY PLOTTED BY	DATE
NOTE BOOK	DRAWN BY	
	TRACED BY	
	DESIGNED BY	
	QUANTITIES BY	
No.	CHECKED BY	

DRAWING NAME: Z:\00 ONGOING\40019.0-HONOAPIILANI LAHAINA BYPASS-KAHOMA WO\06-15-10 COMBINE LAHAINA FINAL DESIGN\HH-SB304.DWG PLOT TIME: 06-14-10, 3:08 PM

FINAL DESIGN 290

FED. ROAD DIST. NO.	STATE	FED. AID PROJ. NO.	FISCAL YEAR	SHEET NO.	TOTAL SHEETS
HAWAII	HAW.	NH-030-1(35)R	2009	291	383

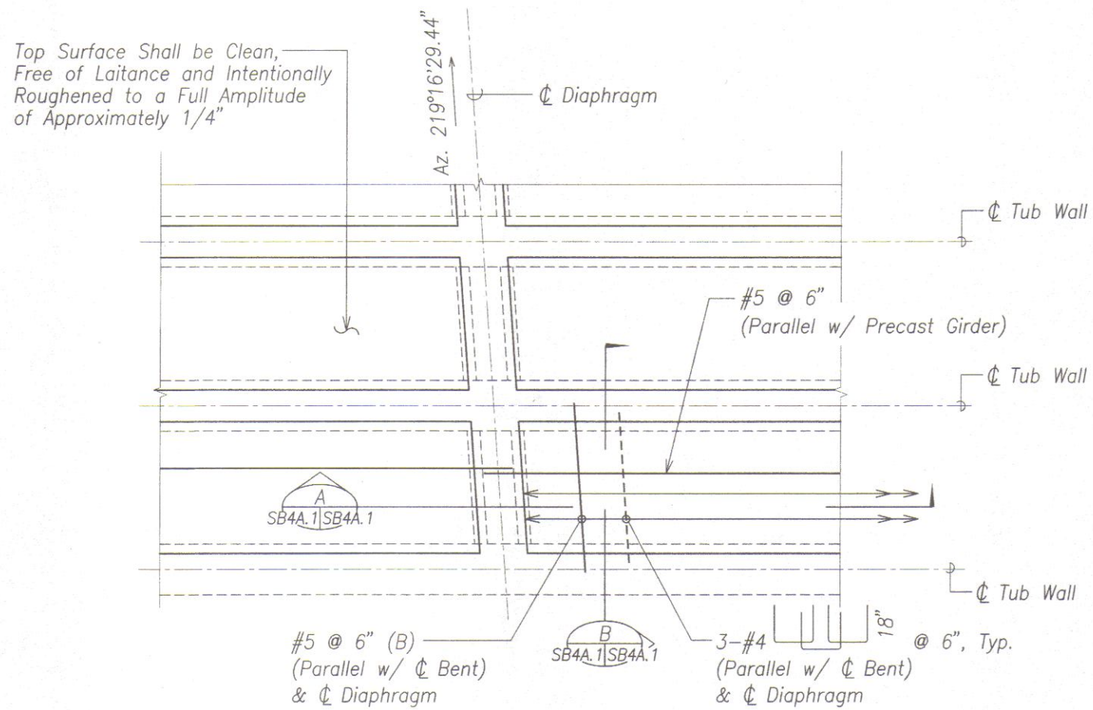

PRECAST DECK PLANK PLAN
Scale: 1/2" = 1'-0"

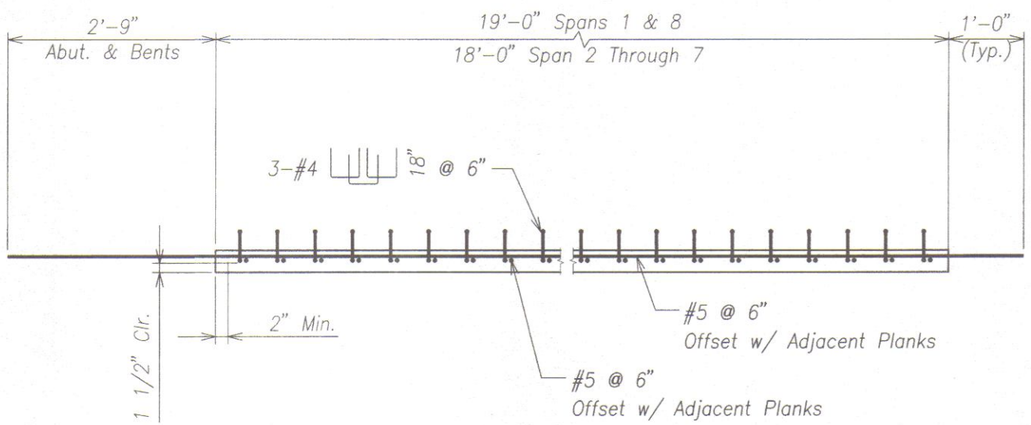

SECTION
Scale: 1" = 1'-0" A SB4A.1 SB4A.1

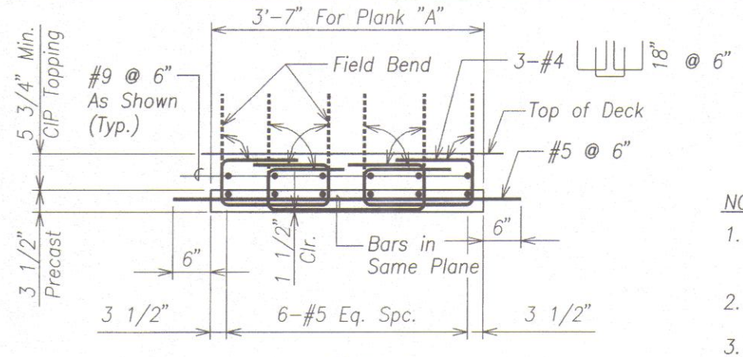

SECTION – PLANK "A" (ABOVE PG1)
Scale: 1" = 1'-0" B SB4A.1 SB4A.1

NOTES:

1. Plank "A" is located above PG-1 Precast Tub Girder.
2. Plank "B" is located between Tub Girders.
3. Plank "C" is located above PG-2 Precast Tub Girders.

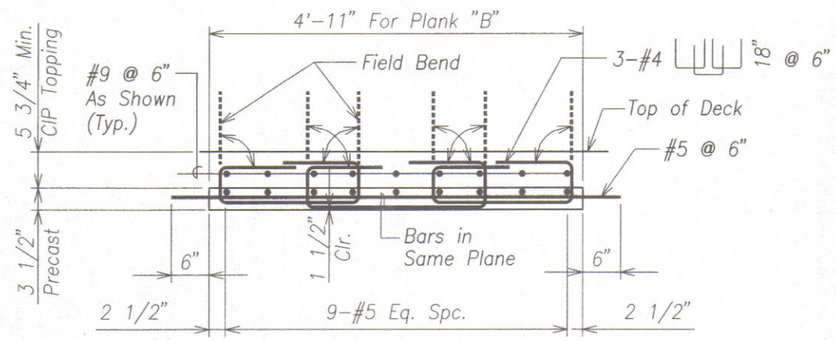

SECTION – PLANK "B" (BETWEEN GIRDERS)
Scale: 1" = 1'-0" C SB4A.1 SB4A.1

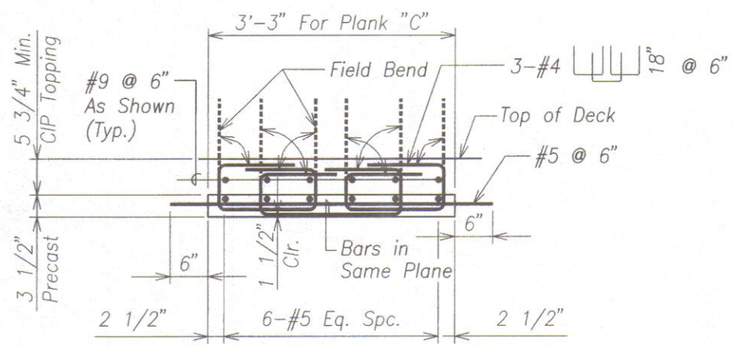

SECTION – PLANK "C" (ABOVE PG2)
Scale: 1" = 1'-0" D SB4A.1 SB4A.1

DAVID K. FUJIWARA LICENSED PROFESSIONAL ENGINEER NO. 8104-S HAWAII, U.S.A.

THIS WORK WAS PREPARED BY ME OR UNDER MY SUPERVISION.

KSF, INC. APRIL 30, 2012 LIC. EXP. DATE

STATE OF HAWAII
DEPARTMENT OF TRANSPORTATION
HIGHWAYS DIVISION

PRECAST DECK PLANK DETAILS

HONOAPIILANI HIGHWAY REALIGNMENT, PHASE 1A
Future Keawe St Extension to Lahainaluna Rd, Part B
Fed. Aid Proj. No. NH-030-1(35)R

Scale: As Noted Date: June, 2010

SHEET No. SB4A.1 OF 3 SHEETS

ORIGINAL PLAN	SURVEY PLOTTED BY	DATE
	DRAWN BY	
NOTE BOOK	TRACED BY	
	DESIGNED BY	
No.	QUANTITIES BY	
	CHECKED BY	

DRAWING NAME: Z:\DO ONGOING\40019.0-HONOAPIILANI LAHAINA BYPASS-KAHOMA WO\06-15-10 COMBINE LAHAINA FINAL DESIGN\HH-SB4ODA1.DWG PLOT TIME: 06-14-10, 3:08 PM

FINAL DESIGN 291

FED. ROAD DIST. NO.	STATE	FED. AID PROJ. NO.	FISCAL YEAR	SHEET NO.	TOTAL SHEETS
HAWAII	HAW.	NH-030-1(35)R	2009	292	383

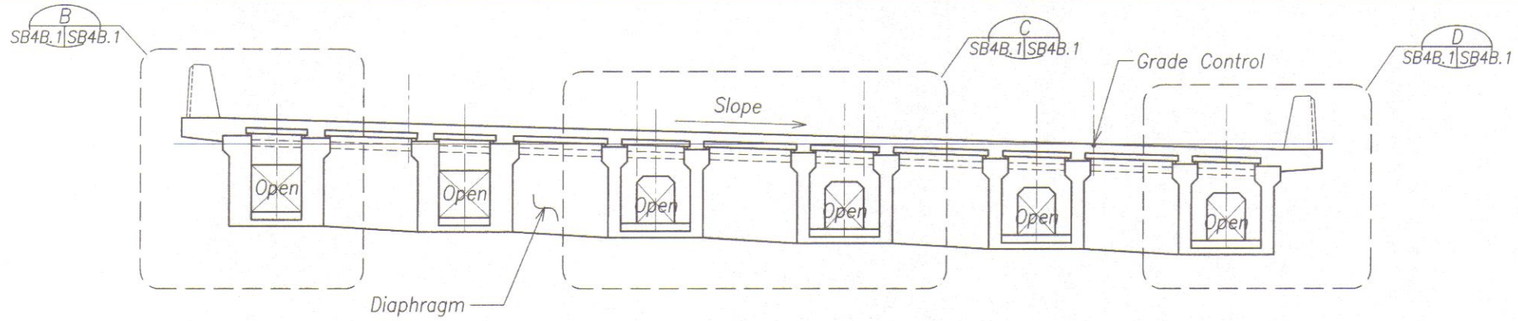

TYPICAL DIAPHRAGM ELEVATION (A SB4B.1 SB4B.1)

Scale: 1/4" = 1'-0"

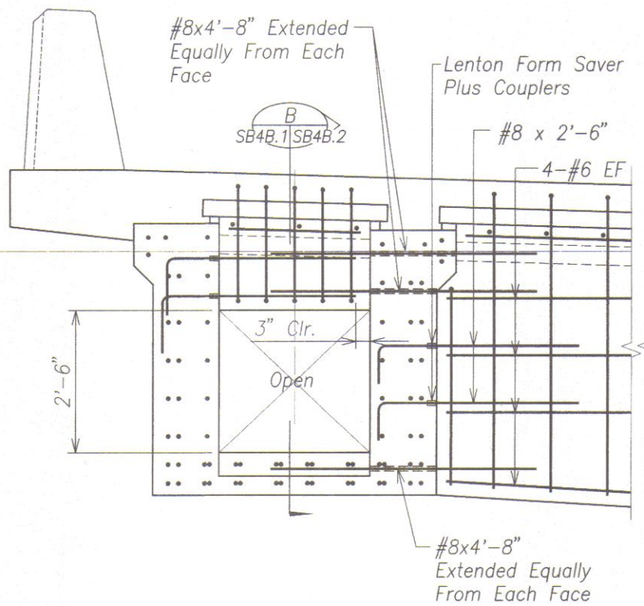

ELEVATION (B SB4B.1 SB4B.2)

Scale: 3/4" = 1'-0"

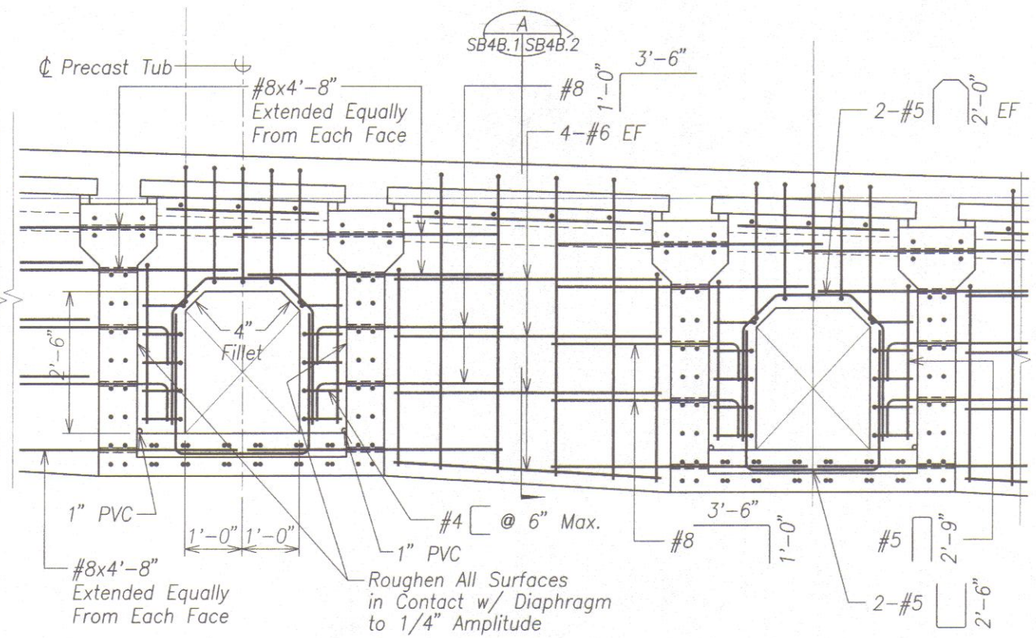

ELEVATION (C SB4B.1 SB4B.2)

Scale: 3/4" = 1'-0"

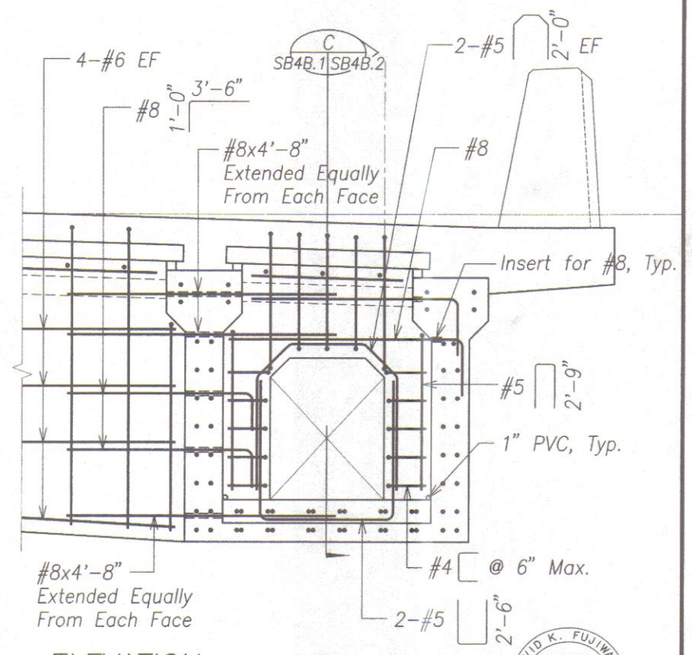

ELEVATION (D SB4B.1 SB4B.2)

Scale: 3/4" = 1'-0"

DAVID K. FUJIWARA
LICENSED PROFESSIONAL ENGINEER
NO. 8104-S
HAWAII, U.S.A.

THIS WORK WAS PREPARED BY ME OR UNDER MY SUPERVISION.

KSF, INC. — APRIL 30, 2012 LIC. EXP. DATE

STATE OF HAWAII
DEPARTMENT OF TRANSPORTATION
HIGHWAYS DIVISION

IN-SPAN DIAPHRAGM ELEVATIONS

HONOAPIILANI HIGHWAY REALIGNMENT, PHASE 1A
Future Keawe St Extension to Lahainaluna Rd, Part B
Fed. Aid Proj. No. NH-030-1(35)R

Scale: As Noted — Date: June, 2010

SHEET No. SB4B.1 OF 3 SHEETS

ORIGINAL PLAN	SURVEY PLOTTED BY	DATE
	DRAWN BY	
NOTE BOOK	TRACED BY	
	DESIGNED BY	
	QUANTITIES BY	
No.	CHECKED BY	

DRAWING NAME: Z:\00 ONGOING\40019.0-HONOAPIILANI LAHAINA BYPASS-KAHOMA WO\06-15-10 COMBINE LAHAINA FINAL DESIGN\HH-SB40081.DWG PLOT TIME: 06-14-10, 3:09 PM

FED. ROAD DIST. NO.	STATE	FED. AID PROJ. NO.	FISCAL YEAR	SHEET NO.	TOTAL SHEETS
HAWAII	HAW.	NH-030-1(35)R	2009	293	383

NOTE:
Rebars from Precast Deck Plank not shown for clarity.

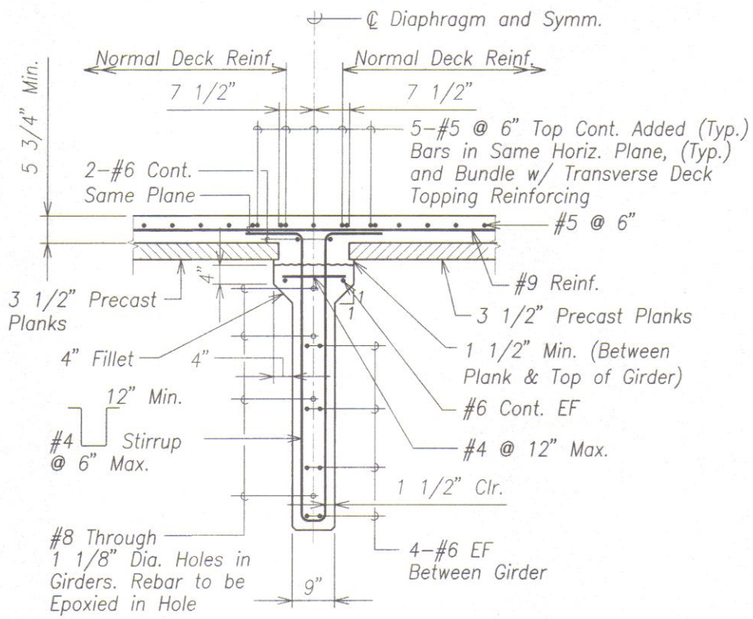

SECTION A
Scale: 3/4" = 1'-0" SB4B.1|SB4B.2

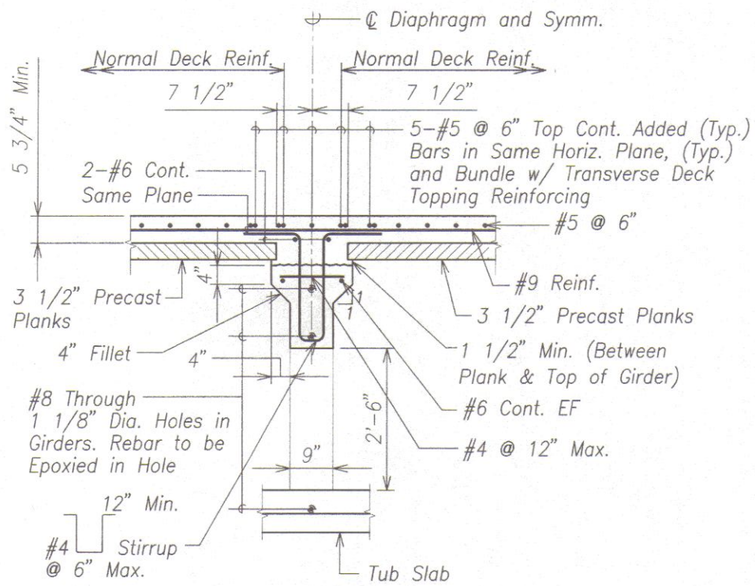

SECTION B
Scale: 3/4" = 1'-0" SB4B.1|SB4B.2

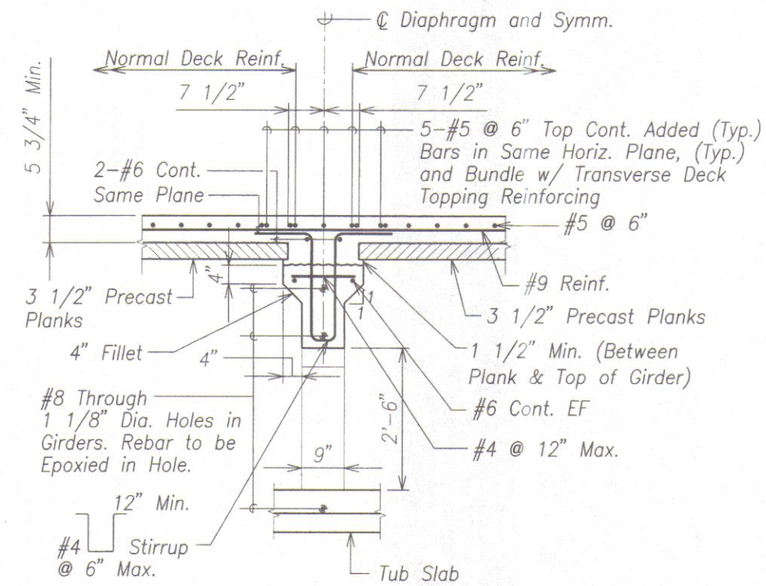

SECTION C
Scale: 3/4" = 1'-0" SB4B.1|SB4B.2

DAVID K. FUJIWARA
LICENSED PROFESSIONAL ENGINEER
NO. 8104-S
HAWAII, U.S.A.

THIS WORK WAS PREPARED BY ME OR UNDER MY SUPERVISION.

KSF, INC. APRIL 30, 2012
LIC. EXP. DATE

STATE OF HAWAII
DEPARTMENT OF TRANSPORTATION
HIGHWAYS DIVISION

IN-SPAN DIAPHRAGM SECTIONS

HONOAPIILANI HIGHWAY REALIGNMENT, PHASE 1A
Future Keawe St Extension to Lahainaluna Rd, Part B
Fed. Aid Proj. No. NH-030-1(35)R

Scale: As Noted Date: June, 2010

SHEET No. SB4B.2 OF 3 SHEETS

ORIGINAL PLAN	SURVEY PLOTTED BY	DATE
NOTE BOOK	DRAWN BY	
	TRACED BY	
	DESIGNED BY	
	QUANTITIES BY	
No.	CHECKED BY	

DRAWING NAME: Z:\00 ONGOING\40019.0-HONOAPIILANI LAHAINA BYPASS-KAHOMA WG\06-15-10 COMBINE LAHAINA FINAL DESIGN\HH-SB400B1.DWG PLOT TIME: 06-14-10, 3:10 PM

FED. ROAD DIST. NO.	STATE	FED. AID PROJ. NO.	FISCAL YEAR	SHEET NO.	TOTAL SHEETS
HAWAII	HAW.	NH-030-1(35)R	2009	294	379

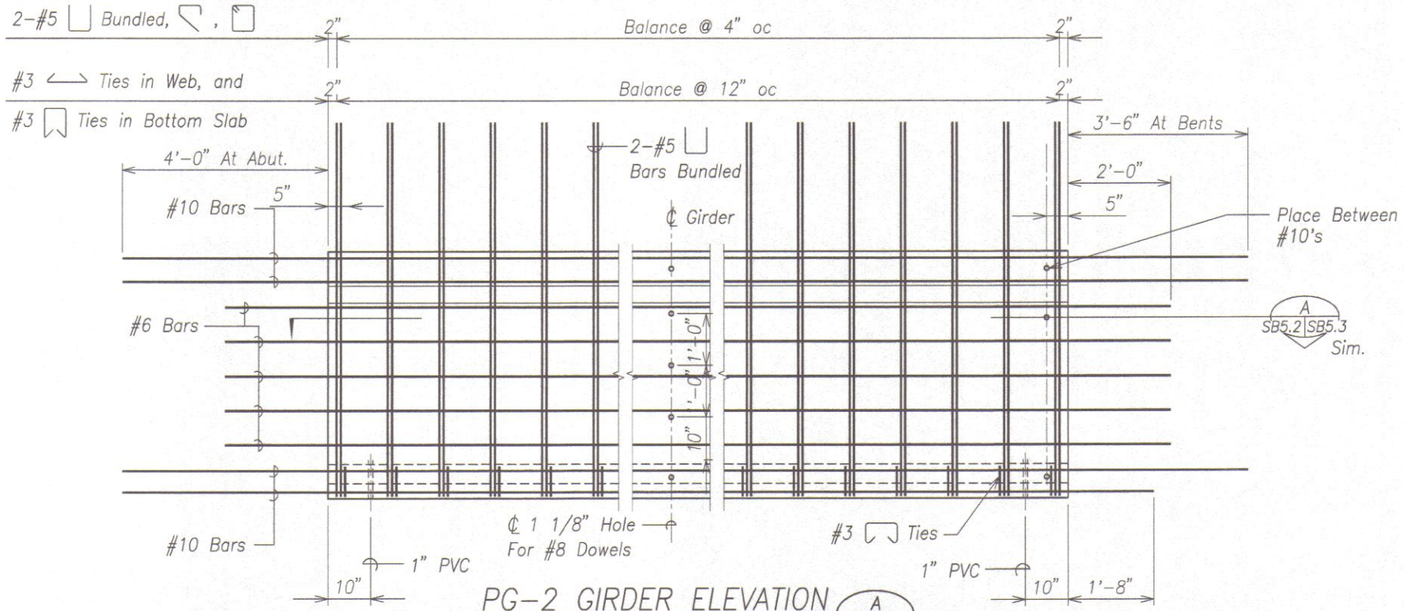

PG-2 GIRDER ELEVATION (A SB5.2 SB5.2)

Scale: 3/4" = 1'-0"

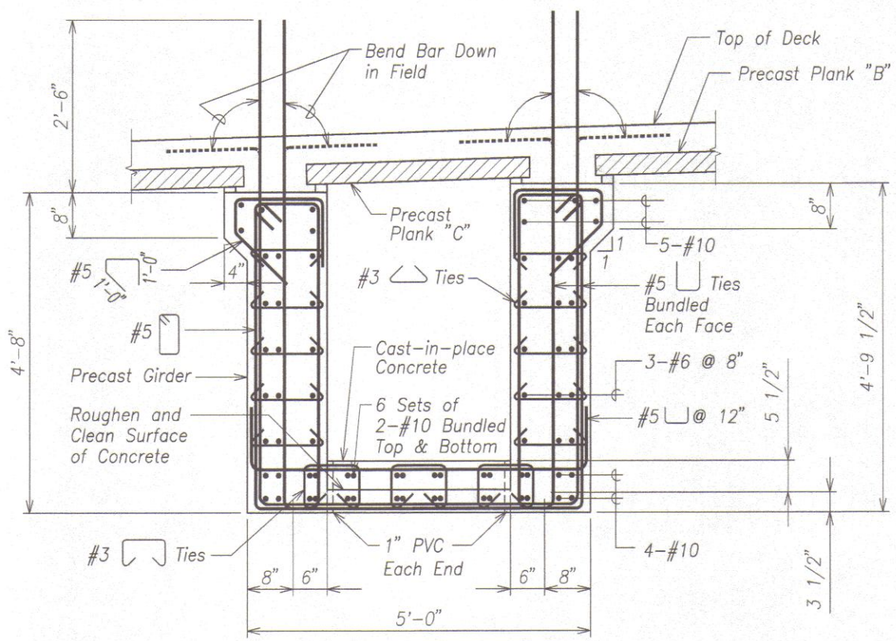

TYPICAL SECTION PG-2 GIRDER (B SB5.2 SB5.2)

Scale: 1" = 1'-0"

Notes:

1. See plan sheet SB3.1 for girder cross section and typical deck section.
2. Camber precast girder 1/4" at centerline span. Soffit of girder shall be parabolic.
3. Just before placing precast girder at designated supports, apply slush grout on supporting surfaces.
4. Offset rebars extending beyond ends of girders w/ rebars extend of beyond ends of girders in adjacent spans.
5. Precast girder shall attain a compressive concrete strength of 6,000 psi and age 14 days prior to handling and form release.
6. Contractor may add #10 x 8'-0" and lap to #10 cont. in order to offset extended bars. Length of extension beyond girder shall be as shown in elevation "A".
7. For details at exterior girder, See sheets SB3.3 and SB4B.2.

DAVID K. FUJIWARA LICENSED PROFESSIONAL ENGINEER NO. 8104-S HAWAII, U.S.A.

THIS WORK WAS PREPARED BY ME OR UNDER MY SUPERVISION.

KSF, INC. — APRIL 30, 2010 LIC. EXP. DATE

STATE OF HAWAII
DEPARTMENT OF TRANSPORTATION
HIGHWAYS DIVISION

PG-2 PRECAST GIRDER

HONOAPIILANI HIGHWAY REALIGNMENT, PHASE 1A
Future Keawe St Extension to Lahainaluna Rd, Part B
Fed. Aid Proj. No. NH-030-1(35)R

Scale: As Noted — Date: November, 2009

SHEET No. SB5.2 OF 5 SHEETS

ORIGINAL PLAN	SURVEY PLOTTED BY	DATE
	DRAWN BY	
	TRACED BY	
NOTE BOOK	DESIGNED BY	
	QUANTITIES BY	
No.	CHECKED BY	

DRAWING NAME: Z:\2004\4019-HONOAPIILANI LAHAINA BYPASS-KAHOMA WO\11-09-09 COMBINE KAHOMA\HH-SB501.DWG PLOT TIME: 11-09-09, 3:25 PM

100% DESIGN 294

FED. ROAD DIST. NO.	STATE	FED. AID PROJ. NO.	FISCAL YEAR	SHEET NO.	TOTAL SHEETS
HAWAII	HAW.	NH-030-1(35)R	2009	294	383

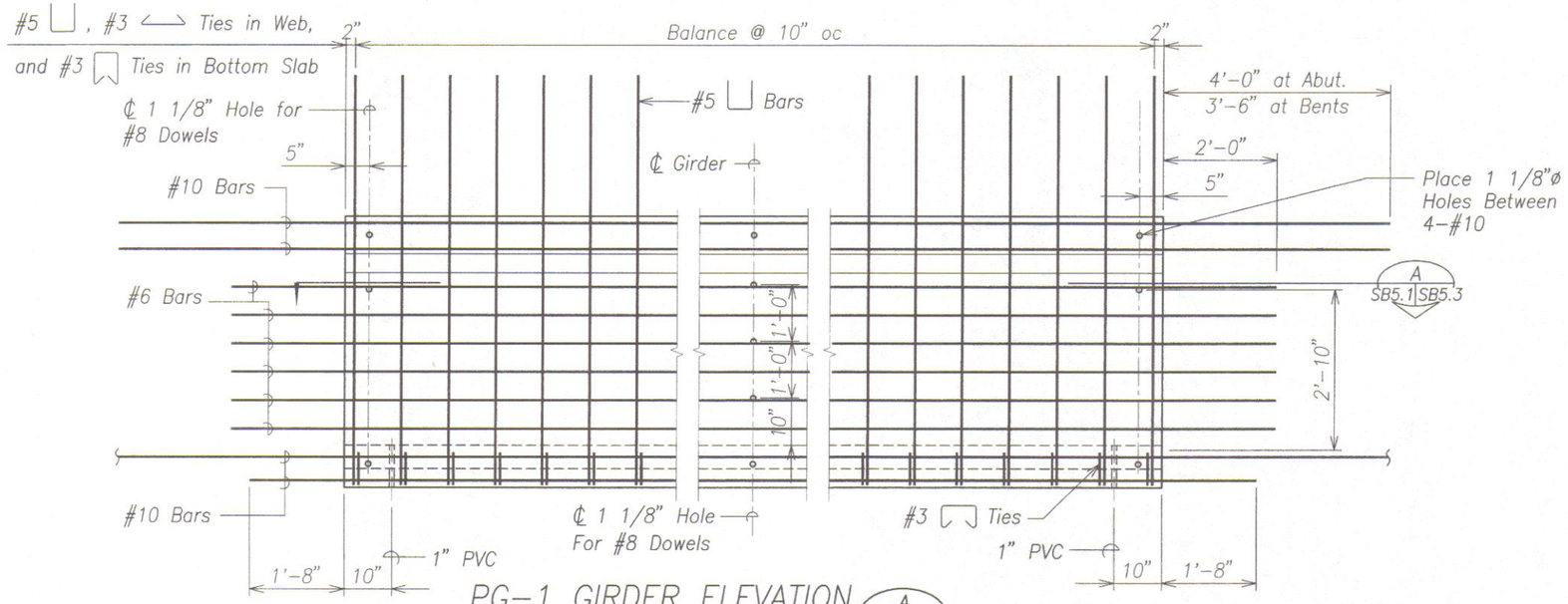

PG-1 GIRDER ELEVATION (A SB5.1 SB5.1)

Scale: 3/4" = 1'-0"

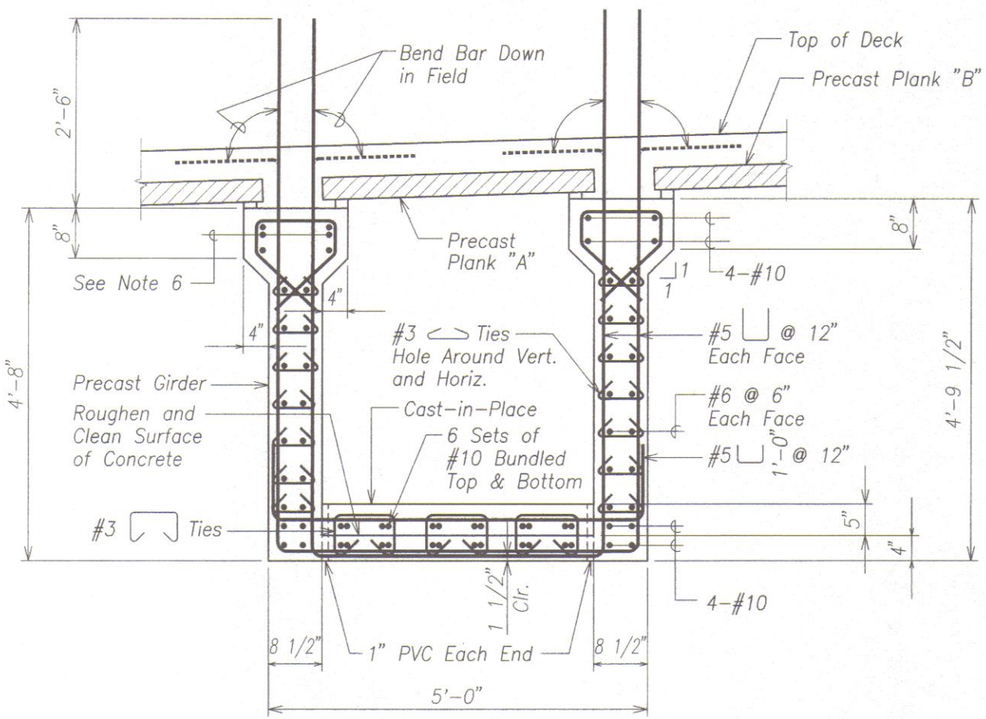

TYPICAL SECTION PG-1 GIRDER (B SB5.1 SB5.1)

Scale: 1" = 1'-0"

NOTES:

1. See plan Sheet SB3.1 for Girder cross section and typical Deck section.
2. Camber Precast Girder 1/4" at centerline span. Soffit of Girder shall be parabolic.
3. Just before placing Precast Girder at designated supports, apply slush grout on supporting surfaces.
4. Offset rebars extending beyond ends of Girders w/ rebars extending beyond ends of Girders in adjacent Spans.
5. Precast Girder shall attain a compressive concrete strength of 6,000 psi and age 14 days prior to handling and form release.
6. Contractor may add #10 x 8'-0" and lap to #10 cont. in order to offset extended bars. Length of extension beyond Girder shall be as shown in Elevation "A".
7. For details at exterior Girder, see Sheets SB3.3 and SB4B.2.

DAVID K. FUJIWARA LICENSED PROFESSIONAL ENGINEER NO. 8104-S HAWAII, U.S.A.

THIS WORK WAS PREPARED BY ME OR UNDER MY SUPERVISION.

David K. Fujiwara APRIL 30, 2012
KSF, INC. LIC. EXP. DATE

STATE OF HAWAII
DEPARTMENT OF TRANSPORTATION
HIGHWAYS DIVISION

PG-1 PRECAST GIRDER

HONOAPIILANI HIGHWAY REALIGNMENT, PHASE 1A
Future Keawe St Extension to Lahainaluna Rd, Part B
Fed. Aid Proj. No. NH-030-1(35)R

Scale: As Noted Date: June, 2010

SHEET No. SB5.1 OF 5 SHEETS

FINAL DESIGN 294

ORIGINAL PLAN | SURVEY PLOTTED BY | DRAWN BY | TRACED BY | DESIGNED BY | QUANTITIES BY | CHECKED BY | DATE | NOTE BOOK No.

DRAWING NAME: Z:\OD ONGOING\40019.0-HONOAPIILANI LAHAINA BYPASS-KAHOMA WO\06-15-10 COMBINE LAHAINA FINAL DESIGN\HI-SB501.DWG PLOT TIME: 06-15-10, 8:38 AM)

FED. ROAD DIST. NO.	STATE	FED. AID PROJ. NO.	FISCAL YEAR	SHEET NO.	TOTAL SHEETS
HAWAII	HAW.	NH-030-1(35)R	2009	295	383

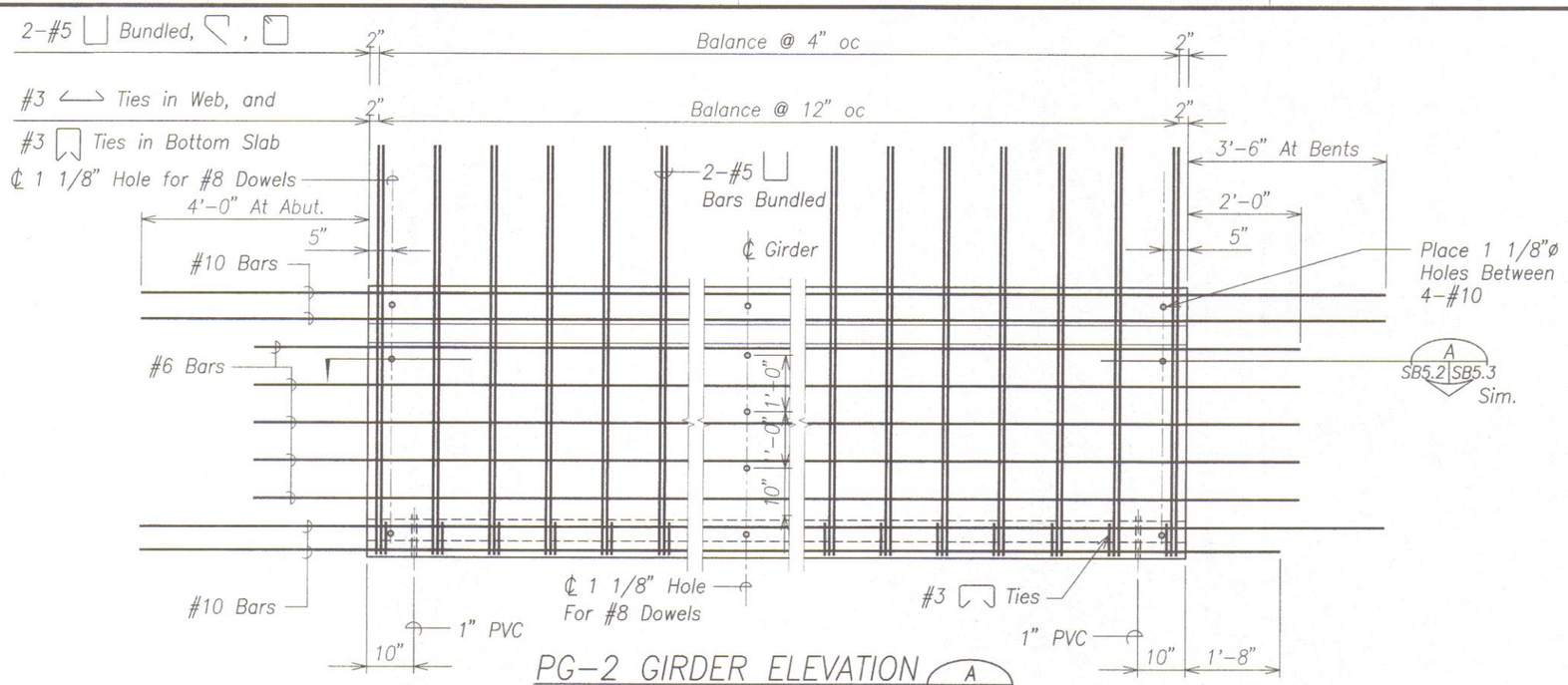

PG-2 GIRDER ELEVATION (A SB5.2 SB5.2)

Scale: 3/4" = 1'-0"

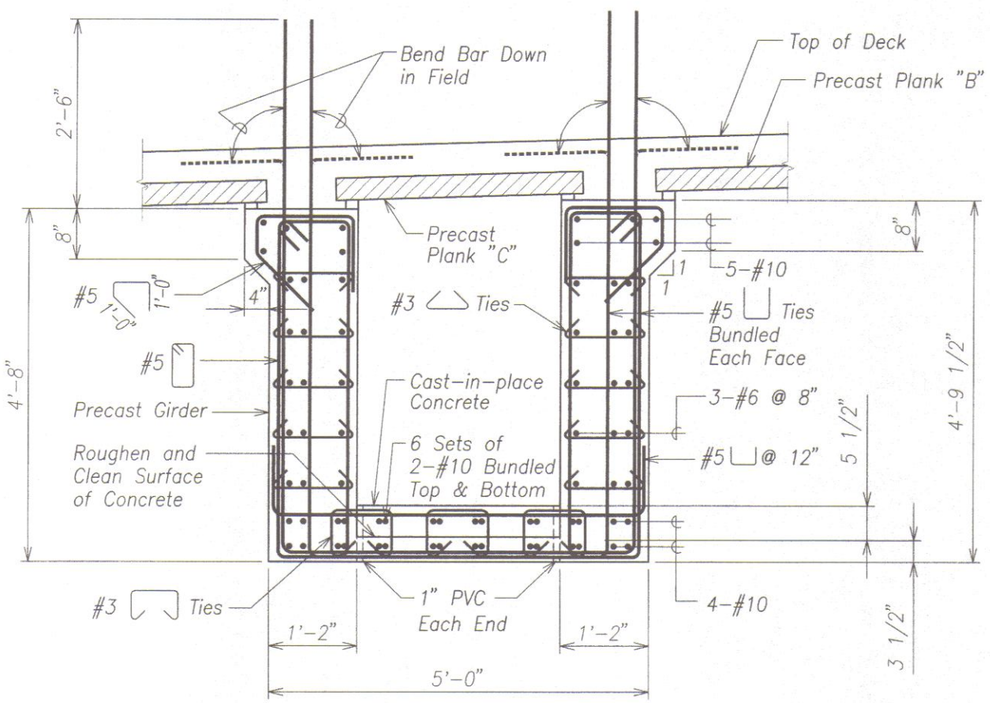

TYPICAL SECTION PG-2 GIRDER (B SB5.2 SB5.2)

Scale: 1" = 1'-0"

NOTES:

1. See plan Sheet SB3.1 for Girder cross section and typical Deck section.
2. Camber Precast Girder 1/4" at centerline span. Soffit of Girder shall be parabolic.
3. Just before placing Precast Girder at designated supports, apply slush grout on supporting surfaces.
4. Offset rebars extending beyond ends of Girders w/ rebars extending beyond ends of Girders in adjacent spans.
5. Precast Girder shall attain a compressive concrete strength of 6,000 psi and age 14 days prior to handling and form release.
6. Contractor may add #10 x 8'-0" and lap to #10 cont. in order to offset extended bars. Length of extension beyond Girder shall be as shown in Elevation "A".
7. For details at exterior Girder, see Sheets SB3.3 and SB4B.2.

DAVID K. FUJIWARA LICENSED PROFESSIONAL ENGINEER NO. 8104-S HAWAII, U.S.A.

THIS WORK WAS PREPARED BY ME OR UNDER MY SUPERVISION.

KSF, INC. APRIL 30, 2012 LIC. EXP. DATE

STATE OF HAWAII
DEPARTMENT OF TRANSPORTATION
HIGHWAYS DIVISION

PG-2 PRECAST GIRDER

HONOAPIILANI HIGHWAY REALIGNMENT, PHASE 1A
Future Keawe St Extension to Lahainaluna Rd, Part B
Fed. Aid Proj. No. NH-030-1(35)R

Scale: As Noted Date: June, 2010

SHEET No. SB5.2 OF 5 SHEETS

FINAL DESIGN 295

ORIGINAL PLAN | NOTE BOOK No. | SURVEY PLOTTED BY | DRAWN BY | TRACED BY | DESIGNED BY | QUANTITIES BY | CHECKED BY | DATE

DRAWING NAME: Z:\00 ONGOING\40019.0-HONOAPIILANI LAHAINA BYPASS-KAHOMA WO\06-15-10 COMBINE LAHAINA FINAL DESIGN\HH-SB501.DWG PLOT TIME: 06-14-10, 10:02 PM

FED. ROAD DIST. NO.	STATE	FED. AID PROJ. NO.	FISCAL YEAR	SHEET NO.	TOTAL SHEETS
HAWAII	HAW.	NH-030-1(35)R	2009	296	383

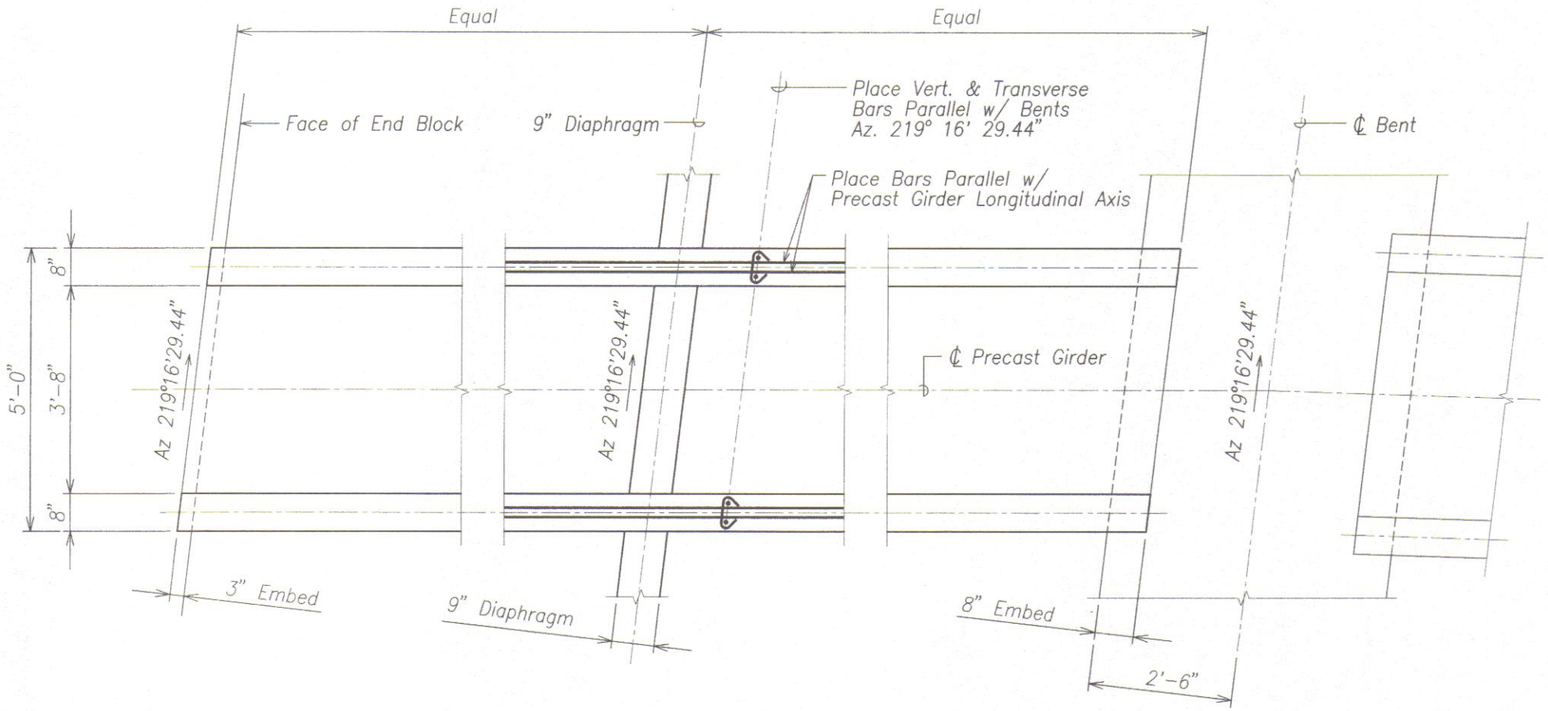

AT ABUTMENT

AT DIAPHRAGM

AT BENT

PRECAST GIRDER SECTION (A SB5.1 | SB5.3 / SB5.2)

Scale: 3/4" = 1'-0"

NOTE:

PG-1 Precast girder shown.

DAVID K. FUJIWARA LICENSED PROFESSIONAL ENGINEER NO. 8104-S HAWAII, U.S.A.

THIS WORK WAS PREPARED BY ME OR UNDER MY SUPERVISION.

KSF, INC. APRIL 30, 2012 LIC. EXP. DATE

STATE OF HAWAII
DEPARTMENT OF TRANSPORTATION
HIGHWAYS DIVISION

PRECAST GIRDER SECTION

HONOAPIILANI HIGHWAY REALIGNMENT, PHASE 1A
Future Keawe St Extension to Lahainaluna Rd, Part B
Fed. Aid Proj. No. NH-030-1(35)R

Scale: As Noted Date: June, 2010

SHEET No. SB5.3 OF 5 SHEETS

ORIGINAL PLAN	SURVEY PLOTTED BY	DATE
	DRAWN BY	"
	TRACED BY	"
NOTE BOOK	DESIGNED BY	"
	QUANTITIES BY	"
No.	CHECKED BY	"

DRAWING NAME: Z:\00 ONGOING\40019.0-HONOAPIILANI LAHAINA BYPASS-KAHOMA WO\06-15-10 COMBINE LAHAINA FINAL DESIGN\HH-SB503.DWG PLOT TIME: 06-14-10, 3:13 PM

FINAL DESIGN 296

FED. ROAD DIST. NO.	STATE	FED. AID PROJ. NO.	FISCAL YEAR	SHEET NO.	TOTAL SHEETS
HAWAII	HAW.	NH-030-1(35)R	2009	297	383

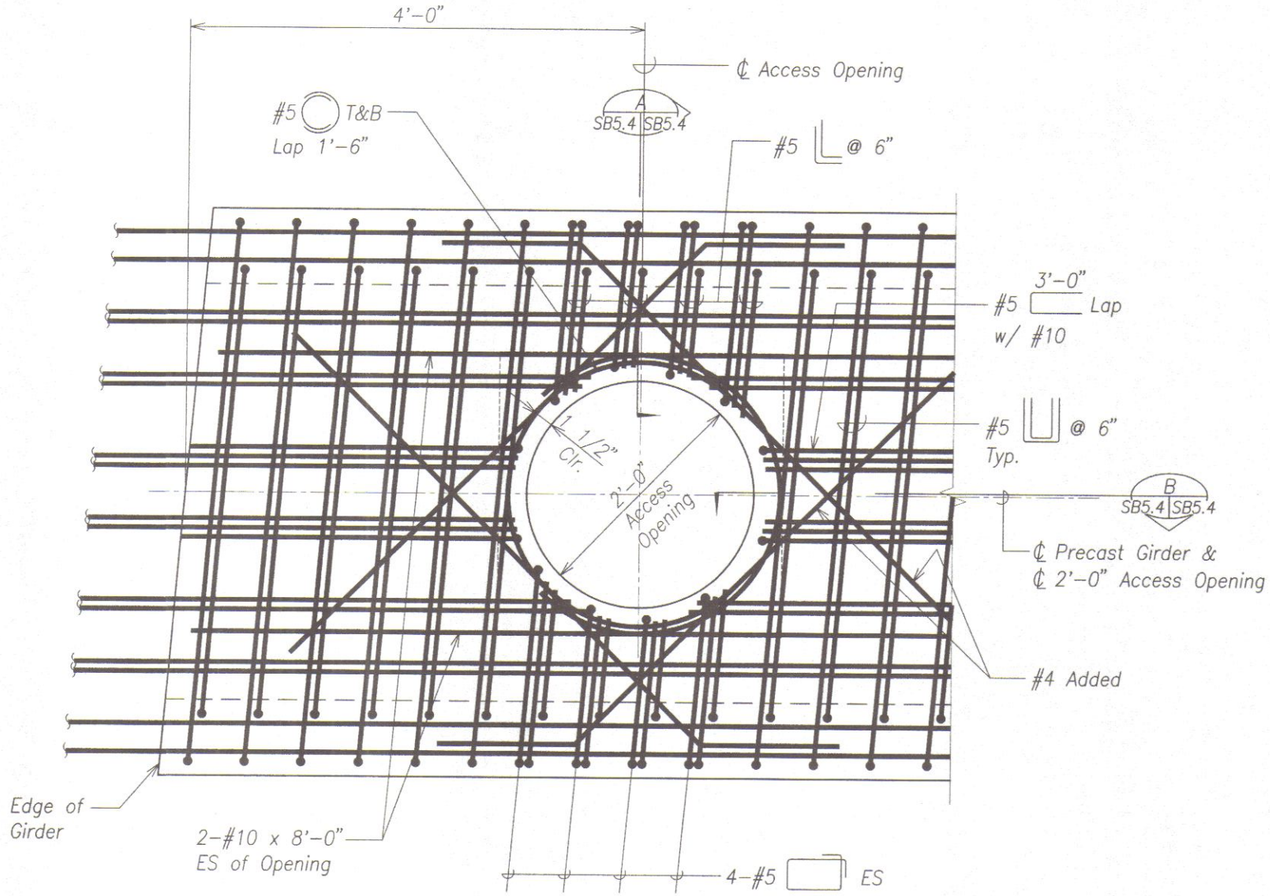

ACCESS OPENING SECTION
Scale: 1 1/2" = 1'-0"

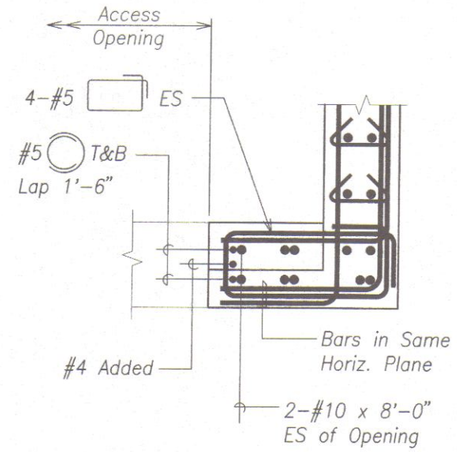

SECTION A SB5.4 SB5.4
Scale: 1 1/2" = 1'-0"

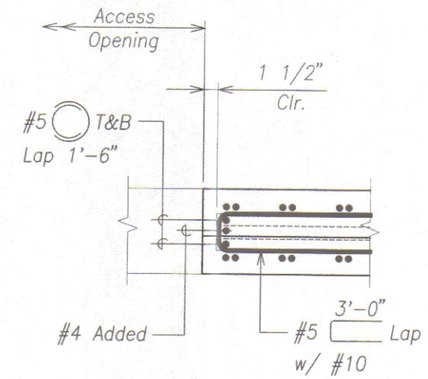

SECTION B SB5.4 SB5.4
Scale: 1 1/2" = 1'-0"

DAVID K. FUJIWARA
LICENSED PROFESSIONAL ENGINEER
NO. 8104-S
HAWAII, U.S.A.

THIS WORK WAS PREPARED BY ME OR UNDER MY SUPERVISION.

KSF, INC. — APRIL 30, 2012 LIC. EXP. DATE

STATE OF HAWAII
DEPARTMENT OF TRANSPORTATION
HIGHWAYS DIVISION

SOFFIT ACCESS SECTIONS

HONOAPIILANI HIGHWAY REALIGNMENT, PHASE 1A
Future Keawe St Extension to Lahainaluna Rd, Part B
Fed. Aid Proj. No. NH-030-1(35)R

Scale: As Noted Date: June, 2010

SHEET No. SB5.4 OF 5 SHEETS

ORIGINAL PLAN
NOTE BOOK No.
SURVEY PLOTTED BY DATE
DRAWN BY "
TRACED BY "
DESIGNED BY "
QUANTITIES BY "
CHECKED BY "

DRAWING NAME: Z:\DD ONGOING\40019.0-HONOAPIILANI LAHAINA BYPASS-KAHOMA WO\06-15-10 COMBINE LAHAINA FINAL DESIGN\HH-SB504.DWG PLOT TIME: 06-14-10, 3:13 PM

FED. ROAD DIST. NO.	STATE	FED. AID PROJ. NO.	FISCAL YEAR	SHEET NO.	TOTAL SHEETS
HAWAII	HAW.	NH-030-1(35)R	2009	298	383

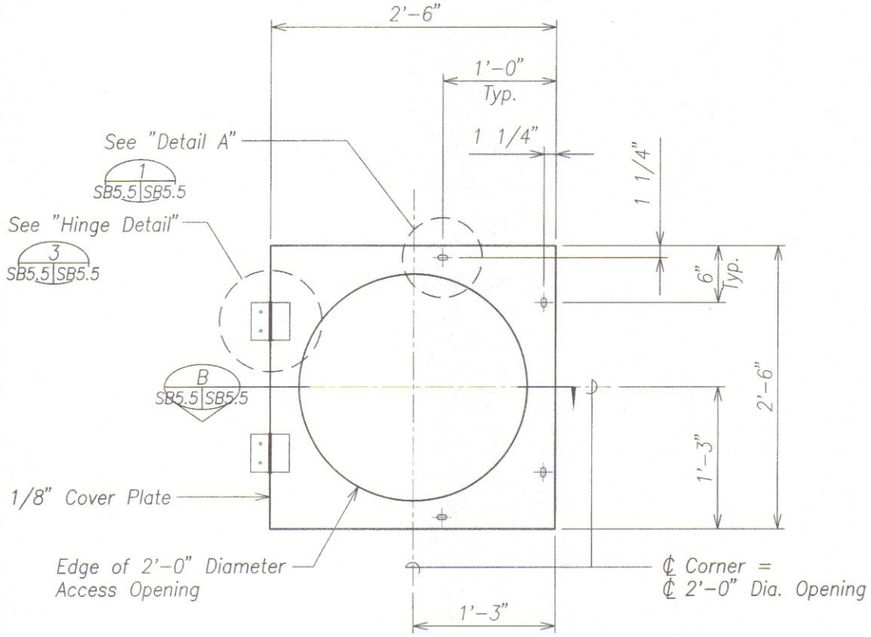

REFLECTED CEILING PLAN (A SB5.5 SB5.5)

Scale: 1 1/2" = 1'-0"

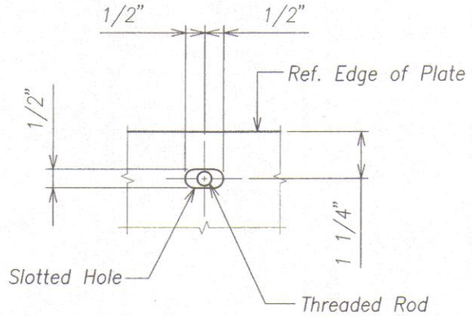

DETAIL "A" (1 SB5.5 SB5.5)

Not to Scale

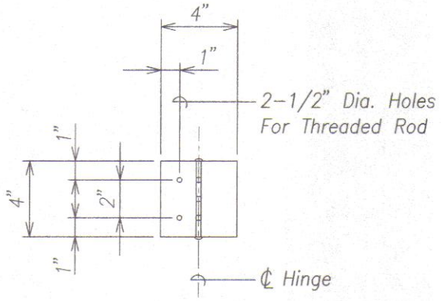

HINGE DETAIL (3 SB5.5 SB5.5)

Scale: 3" = 1'-0"

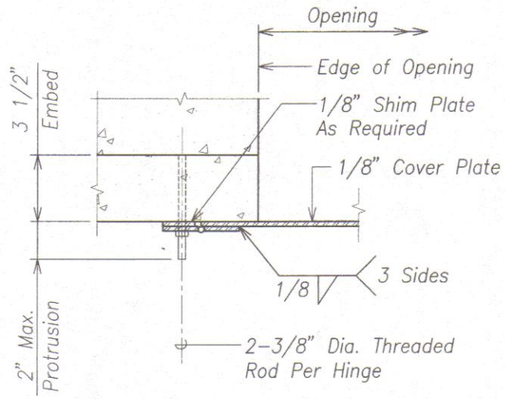

HINGE ANCHORAGE DETAIL (2 SB5.5 SB5.5)

Scale: 3" = 1'-0"

ACCESS HATCH ASSEMBLY NOTES:

1. Soffit Access Hatch swing direction to be determined by the Engineer.
2. Access opening cover plates shall be ASTM A36 hot-dip galvanized after fabrication.
3. All hinges, pins, threaded rods and connectors shall be stainless steel.
4. Hinge assembly to be minimum 1/8" thick with non-removable pins.
5. Anchorage device and hardware shall be stainless steel and allow for safe connection with a personal fall arrest system. It shall be capable of supporting a minimum load of 5000 lbs without failure when tested in accordance to ANSI Z359.1.

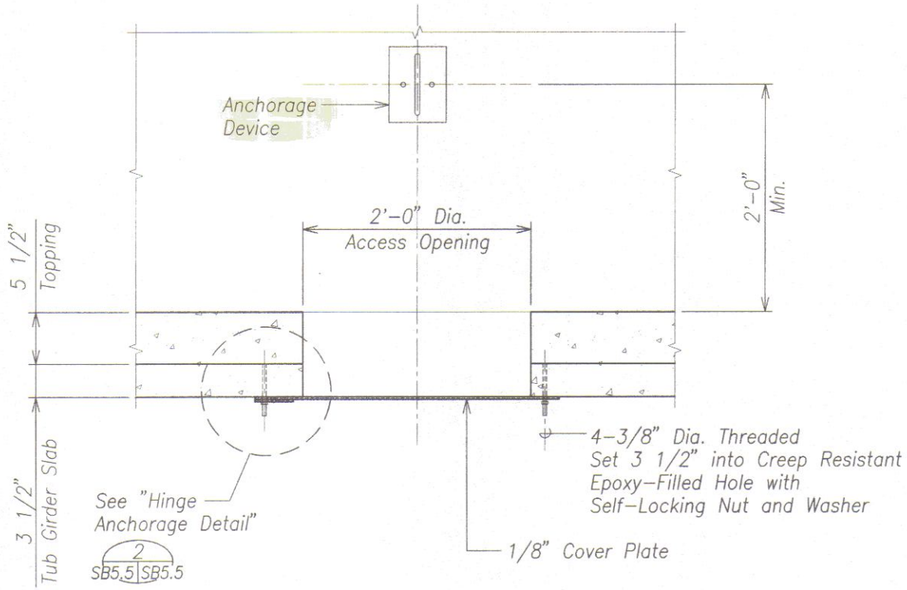

SECTION (B SB5.5 SB5.5)

Scale: 1 1/2" = 1'-0"

DAVID K. FUJIWARA LICENSED PROFESSIONAL ENGINEER NO. 8104-S HAWAII, U.S.A.

THIS WORK WAS PREPARED BY ME OR UNDER MY SUPERVISION.

KSF, INC. — APRIL 30, 2012 LIC. EXP. DATE

STATE OF HAWAII
DEPARTMENT OF TRANSPORTATION
HIGHWAYS DIVISION

SOFFIT ACCESS TYPICAL DETAILS

HONOAPIILANI HIGHWAY REALIGNMENT, PHASE 1A
Future Keawe St Extension to Lahainaluna Rd, Part B
Fed. Aid Proj. No. NH-030-1(35)R

Scale: As Noted — Date: June, 2010

SHEET No. SB5.5 OF 5 SHEETS

FINAL DESIGN 298

ORIGINAL PLAN	SURVEY PLOTTED BY	DATE
	DRAWN BY	
	TRACED BY	
NOTE BOOK	DESIGNED BY	
No.	QUANTITIES BY	
	CHECKED BY	

DRAWING NAME: Z:\00 ONGOING\40019.0-HONOAPIILANI LAHAINA BYPASS-KAHOMA WO\06-15-10 COMBINE LAHAINA FINAL DESIGN\HH-SB504.DWG PLOT TIME: 06-14-10, 3:14 PM

FED. ROAD DIST. NO.	STATE	FED. AID PROJ. NO.	FISCAL YEAR	SHEET NO.	TOTAL SHEETS
HAWAII	HAW.	NH-030-1(35)R	2009	299	383

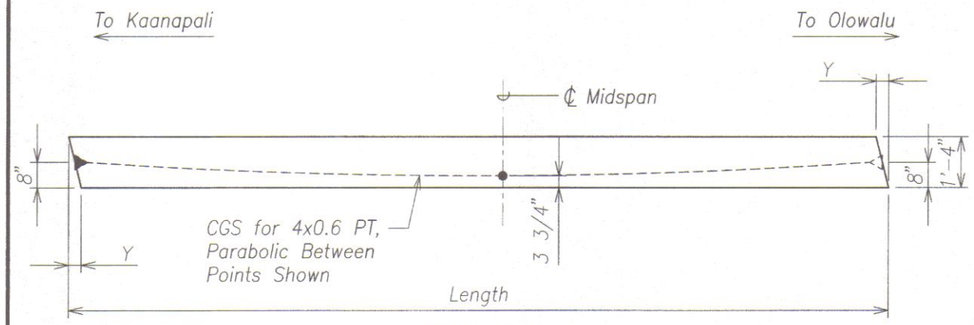

SPAN NO. 1

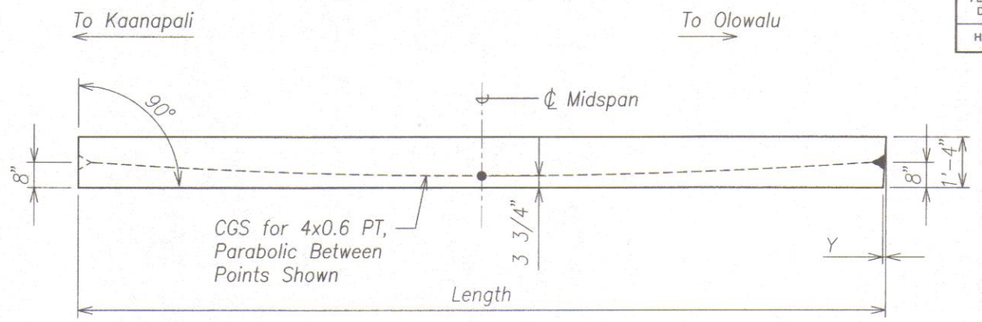

SPAN NO. 5

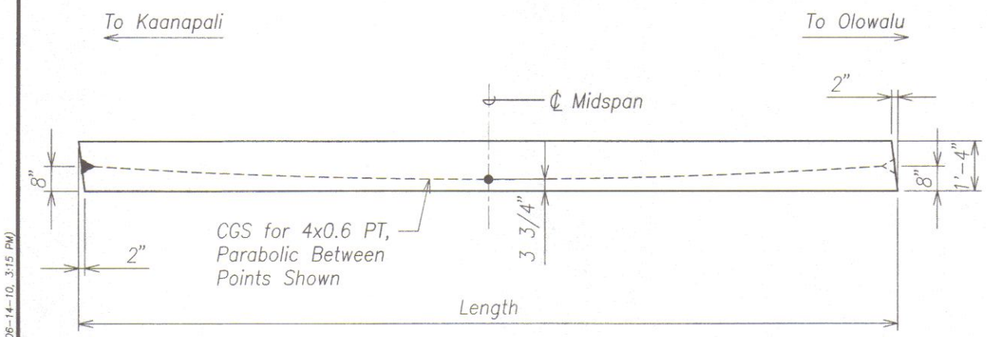

SPAN NO. 2

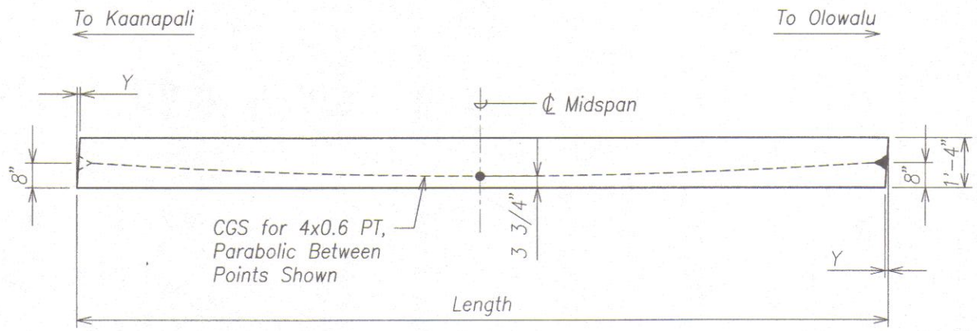

SPAN NO. 6

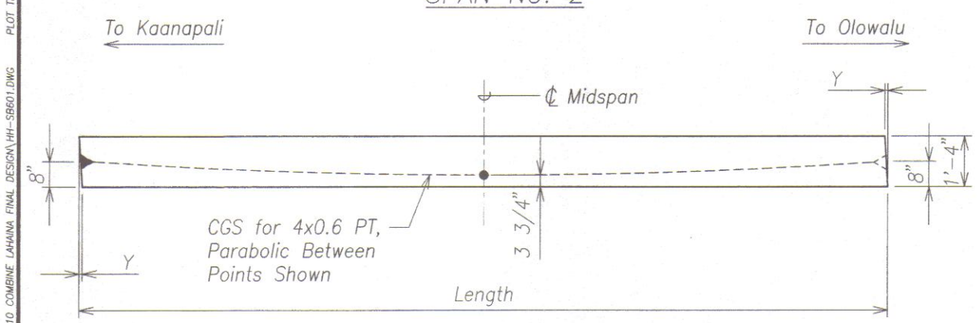

SPAN NO. 3

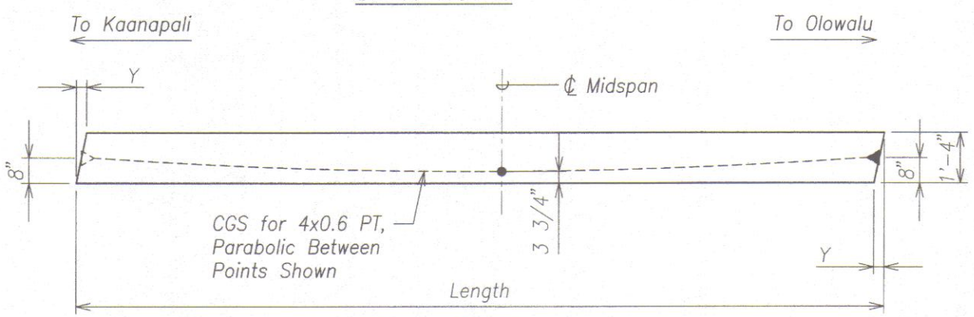

SPAN NO. 7

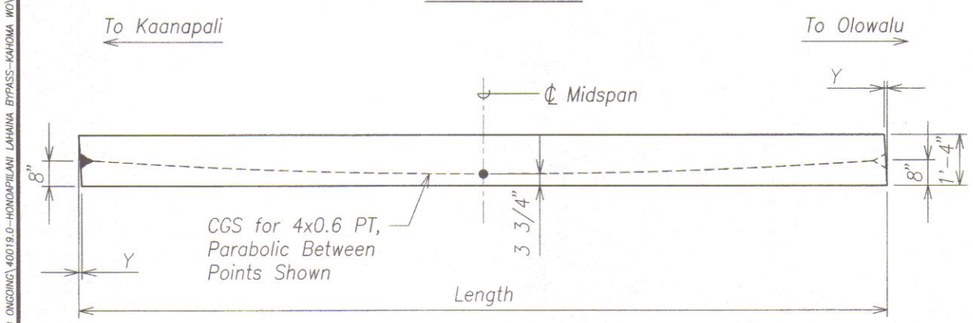

SPAN NO. 4

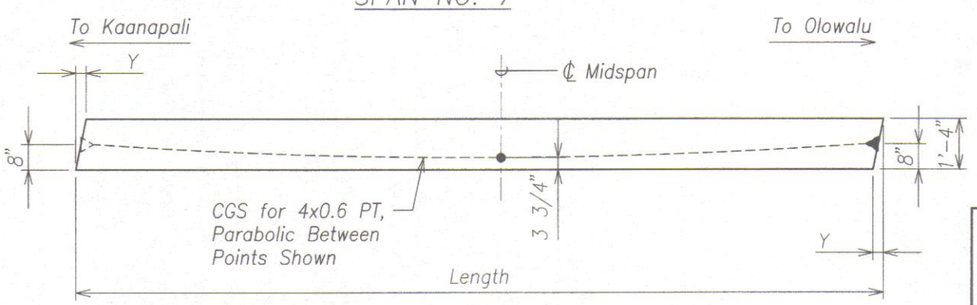

SPAN NO. 8

PATP SCHEMATIC

Scale: None

LEGEND:

▶——⊣ Denotes Dead End

▷——⊣ Denotes Jacking End

DAVID K. FUJIWARA LICENSED PROFESSIONAL ENGINEER NO. 8104-S HAWAII, U.S.A.

THIS WORK WAS PREPARED BY ME OR UNDER MY SUPERVISION.

KSF, INC. — APRIL 30, 2012 LIC. EXP. DATE

STATE OF HAWAII
DEPARTMENT OF TRANSPORTATION
HIGHWAYS DIVISION

PRECAST ARCH TIE PLANK

HONOAPIILANI HIGHWAY REALIGNMENT, PHASE 1A
Future Keawe St Extension to Lahainaluna Rd, Part B
Fed. Aid Proj. No. NH-030-1(35)R

Scale: As Noted — Date: June, 2010

SHEET No. SB6.1 OF 6 SHEETS

ORIGINAL PLAN — SURVEY PLOTTED BY, DRAWN BY, TRACED BY, DESIGNED BY, QUANTITIES BY, CHECKED BY — DATE
NOTE BOOK No.

DRAWING NAME: Z:\00 ONGOING\40019.0-HONOAPIILANI LAHAINA BYPASS-KAHOMA WO\06-15-10 COMBINE LAHAINA FINAL DESIGN\HH-SB601.DWG PLOT TIME: 06-14-10, 3:15 PM

FED. ROAD DIST. NO.	STATE	FED. AID PROJ. NO.	FISCAL YEAR	SHEET NO.	TOTAL SHEETS
HAWAII	HAW.	NH-030-1(35)R	2009	300	383

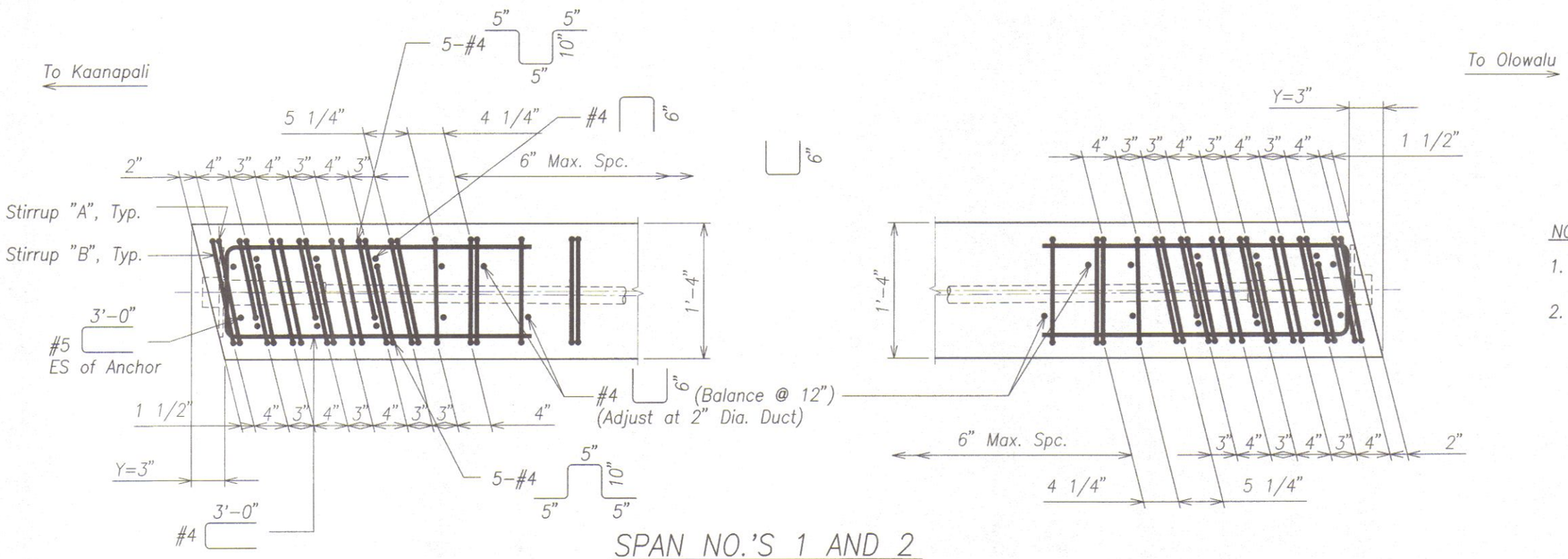

SPAN NO.'S 1 AND 2

Scale: 1 1/2" = 1'-0"

NOTES:

1. See Sht. SB6.5 for additional details.
2. See Sht. SB6.5 for Drip details.

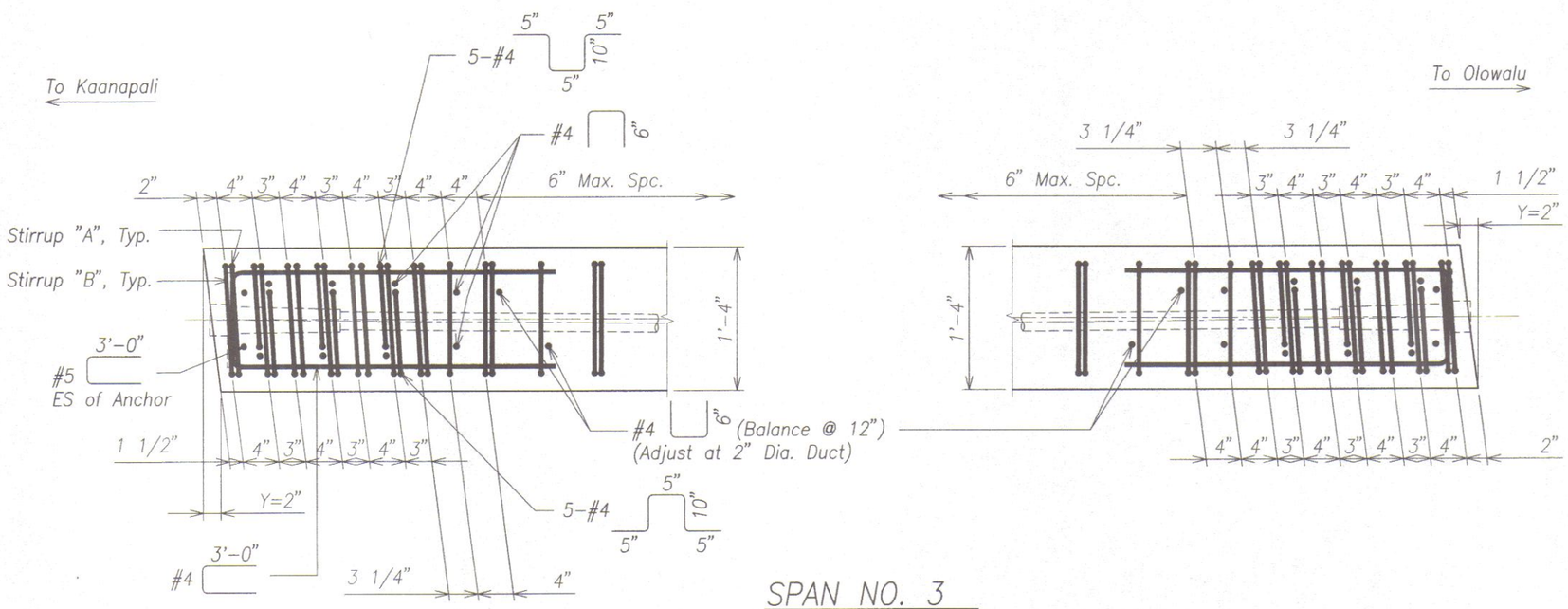

SPAN NO. 3

Scale: 1 1/2" = 1'-0"

DAVID K. FUJIWARA
LICENSED PROFESSIONAL ENGINEER
NO. 8104-S
HAWAII, U.S.A.

THIS WORK WAS PREPARED BY ME OR UNDER MY SUPERVISION.

KSF, INC. — APRIL 30, 2012 LIC. EXP. DATE

STATE OF HAWAII
DEPARTMENT OF TRANSPORTATION
HIGHWAYS DIVISION

PRECAST ARCH TIE PLANK

HONOAPIILANI HIGHWAY REALIGNMENT, PHASE 1A
Future Keawe St Extension to Lahainaluna Rd, Part B
Fed. Aid Proj. No. NH-030-1(35)R

Scale: As Noted — Date: June, 2010

SHEET No. SB6.2 OF 6 SHEETS

FINAL DESIGN 300

ORIGINAL PLAN	SURVEY PLOTTED BY	DATE
	DRAWN BY	
NOTE BOOK	TRACED BY	
	DESIGNED BY	
No.	QUANTITIES BY	
	CHECKED BY	

DRAWING NAME: Z:\00 ONGOING\40019.0-HONOAPIILANI LAHAINA BYPASS-KAHOMA WO\06-15-10 COMBINE LAHAINA FINAL DESIGN\HH-SB602.DWG PLOT TIME: 06-14-10, 3:15 PM

FED. ROAD DIST. NO.	STATE	FED. AID PROJ. NO.	FISCAL YEAR	SHEET NO.	TOTAL SHEETS
HAWAII	HAW.	NH-030-1(35)R	2009	301	383

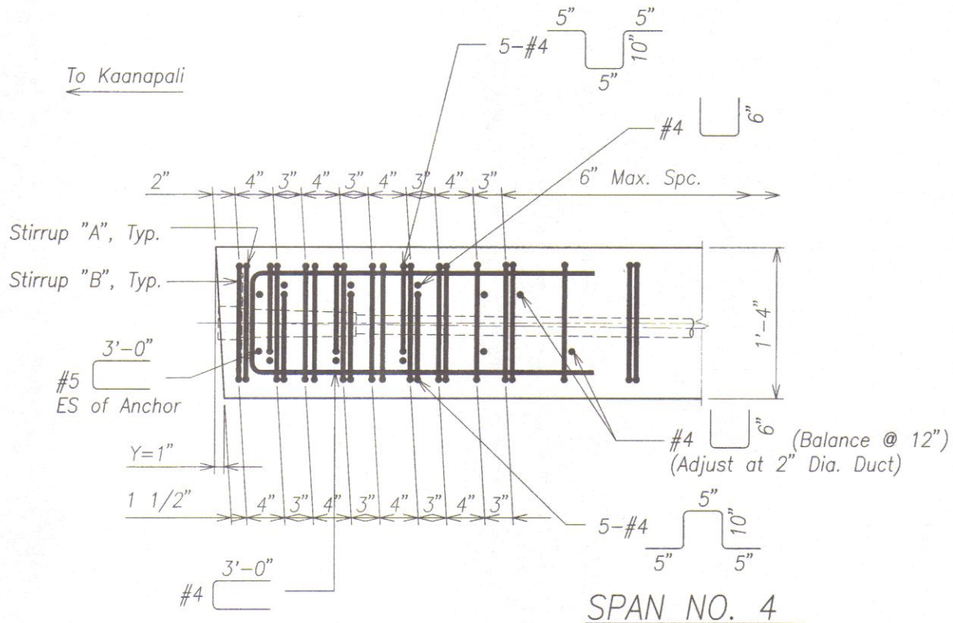

SPAN NO. 4
Scale: 1 1/2" = 1'-0"

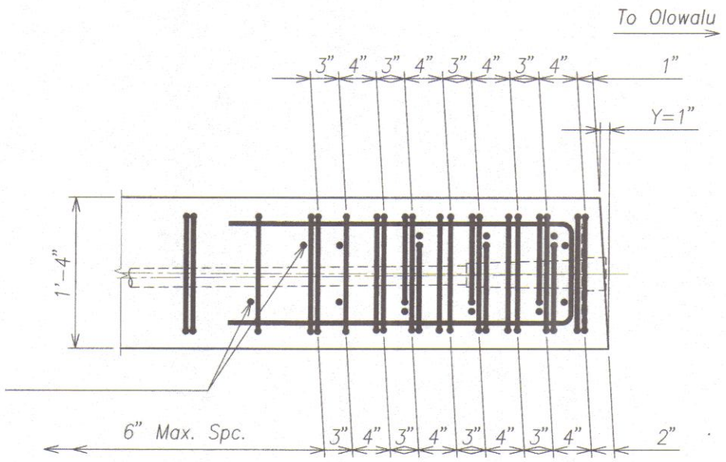

NOTES:

1. See Sht. SB6.5 for additional details.
2. See Sht. SB6.5 for Drip details.

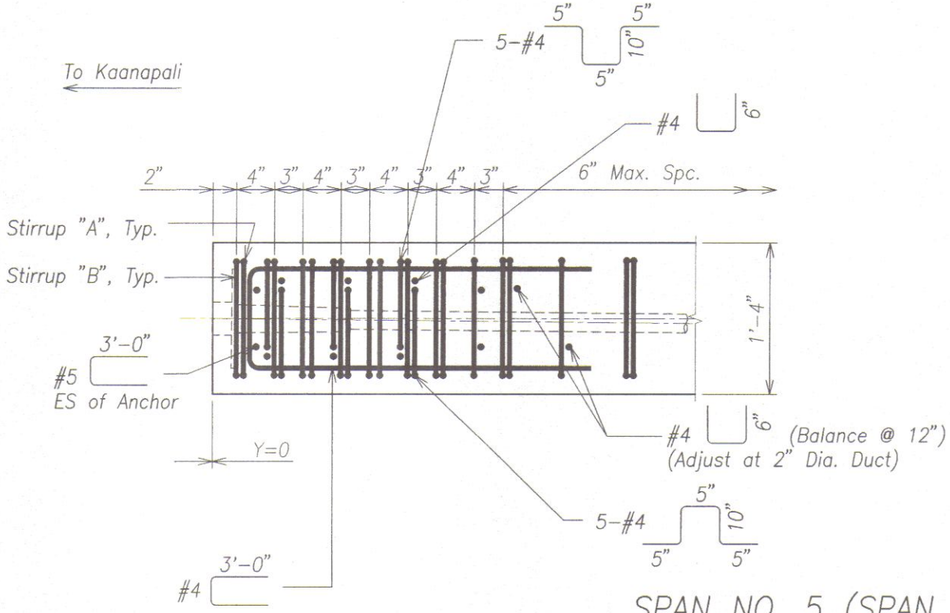

SPAN NO. 5 (SPAN NO. 6 OPPOSITE HAND)
Scale: 1 1/2" = 1'-0"

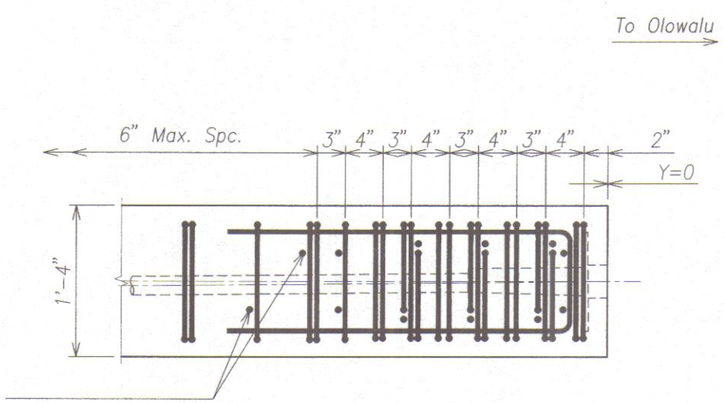

DAVID K. FUJIMARA
LICENSED PROFESSIONAL ENGINEER
NO. 8104-S
HAWAII, U.S.A.

THIS WORK WAS PREPARED BY ME OR UNDER MY SUPERVISION.

KSF, INC. — APRIL 30, 2012 LIC. EXP. DATE

STATE OF HAWAII
DEPARTMENT OF TRANSPORTATION
HIGHWAYS DIVISION

PRECAST ARCH TIE PLANK

HONOAPIILANI HIGHWAY REALIGNMENT, PHASE 1A
Future Keawe St Extension to Lahainaluna Rd, Part B
Fed. Aid Proj. No. NH-030-1(35)R

Scale: As Noted — Date: June, 2010

SHEET No. SB6.3 OF 6 SHEETS

FINAL DESIGN 301

ORIGINAL PLAN	SURVEY PLOTTED BY	DATE
	DRAWN BY	
NOTE BOOK	TRACED BY	
	DESIGNED BY	
	QUANTITIES BY	
No.	CHECKED BY	

DRAWING NAME: Z:\00_ONGOING\40019.0-HONOAPIILANI LAHAINA BYPASS-KAHOMA WO\06-15-10 COMBINE LAHAINA FINAL DESIGN\HH-SB602.DWG PLOT TIME: 06-14-10, 3:15 PM)

FED. ROAD DIST. NO.	STATE	FED. AID PROJ. NO.	FISCAL YEAR	SHEET NO.	TOTAL SHEETS
HAWAII	HAW.	NH-030-1(35)R	2009	302	383

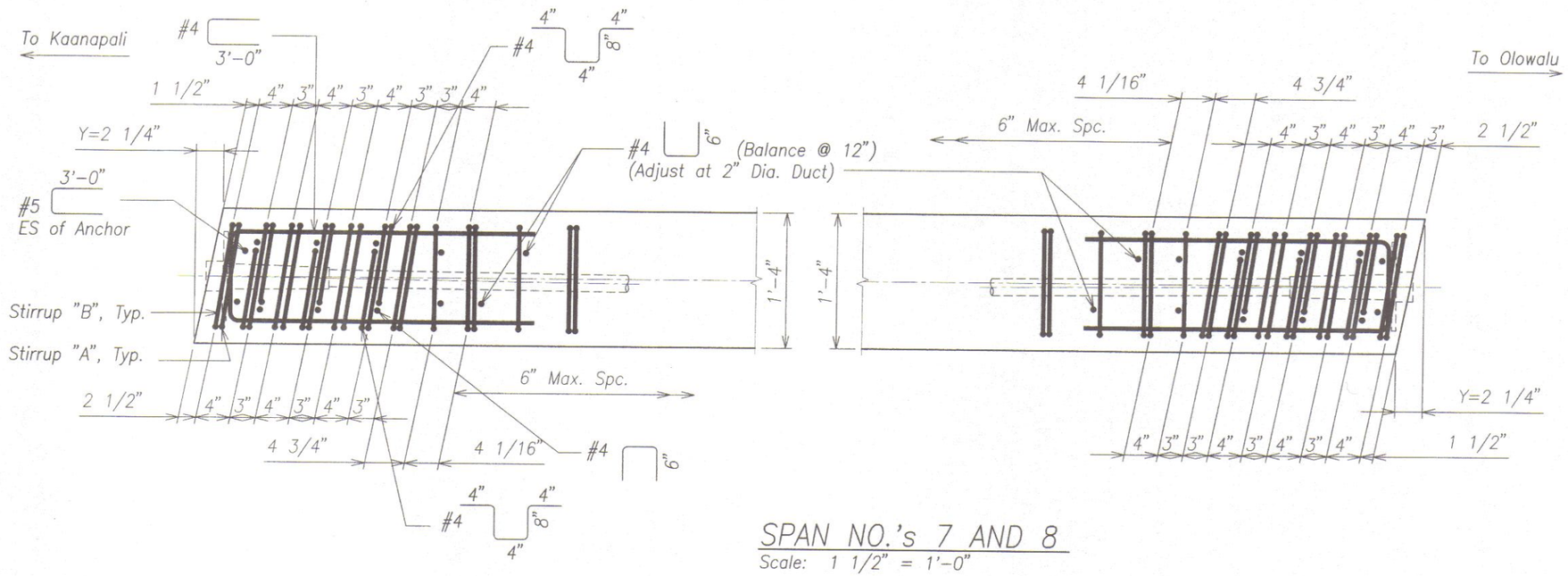

SPAN NO.'s 7 AND 8

Scale: 1 1/2" = 1'-0"

NOTE:

See Sht. SB6.5 for additional details.

ORIGINAL PLAN	SURVEY PLOTTED BY	DATE
NOTE BOOK	DRAWN BY	"
	TRACED BY	"
	DESIGNED BY	"
	QUANTITIES BY	"
No.	CHECKED BY	"

DRAWING NAME: Z:\00 ONGOING\40019.0-HONOAPIILANI LAHAINA BYPASS-KAHOMA WO\06-15-10 COMBINE LAHAINA FINAL DESIGN\HH-SB602.DWG PLOT TIME: 06-14-10, 3:16 PM

DAVID K. FUJIWARA
LICENSED PROFESSIONAL ENGINEER
NO. 8104-S
HAWAII, U.S.A.

THIS WORK WAS PREPARED BY ME OR UNDER MY SUPERVISION.

KSF, INC. — APRIL 30, 2012 LIC. EXP. DATE

STATE OF HAWAII
DEPARTMENT OF TRANSPORTATION
HIGHWAYS DIVISION

PRECAST ARCH TIE PLANK

HONOAPIILANI HIGHWAY REALIGNMENT, PHASE 1A
Future Keawe St Extension to Lahainaluna Rd, Part B
Fed. Aid Proj. No. NH-030-1(35)R

Scale: As Noted Date: June, 2010

SHEET No. SB6.4 OF 6 SHEETS

FINAL DESIGN 606

FED. ROAD DIST. NO.	STATE	FED. AID PROJ. NO.	FISCAL YEAR	SHEET NO.	TOTAL SHEETS
HAWAII	HAW.	NH-030-1(35)R	2009	303	383

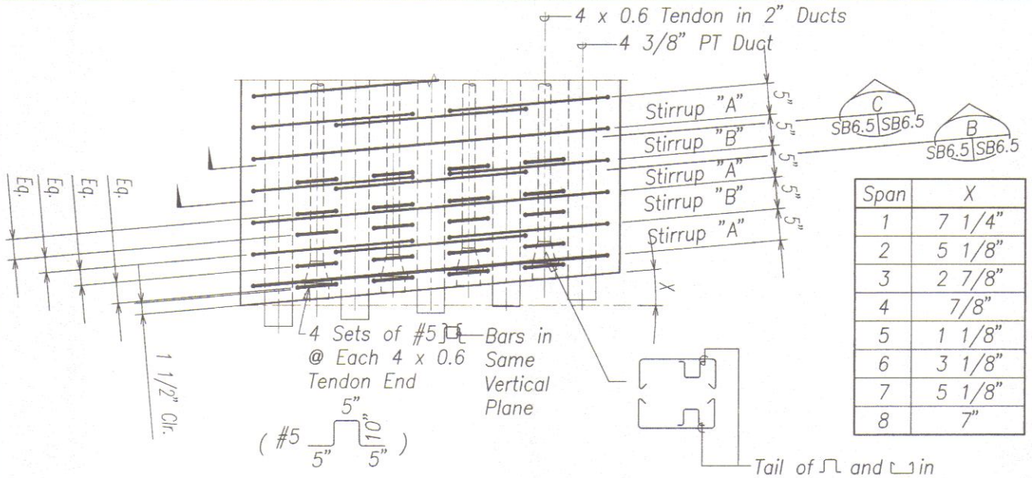

Span	X
1	7 1/4"
2	5 1/8"
3	2 7/8"
4	7/8"
5	1 1/8"
6	3 1/8"
7	5 1/8"
8	7"

PLAN – TOP OF PLANK

Scale: 1" = 1'-0"

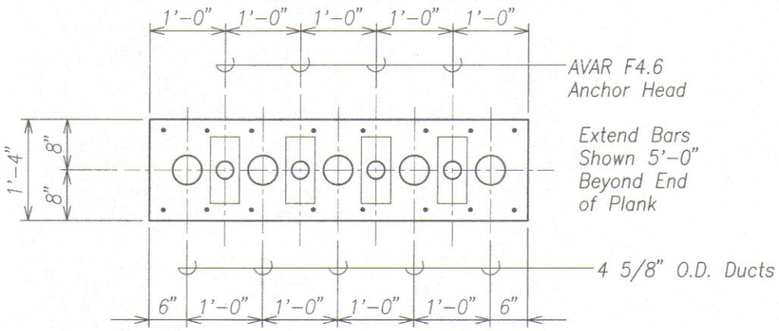

ELEVATION AT END BLOCKS

Scale: 1" = 1'-0"

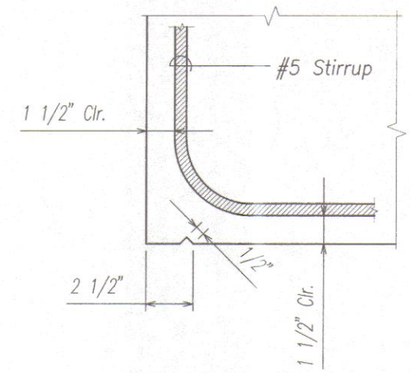

DRIP DETAIL FOR PLANK

1 SB6.5 SB6.5

Scale: 3" = 1'-0"

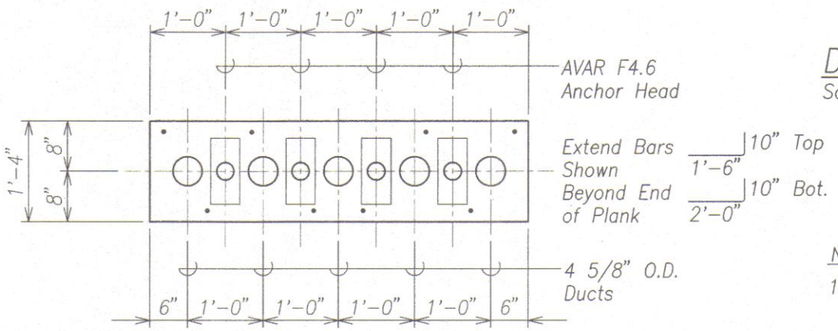

ALT. "A" ELEVATION AT STIFFENER BEAM

Scale: 1" = 1'-0"

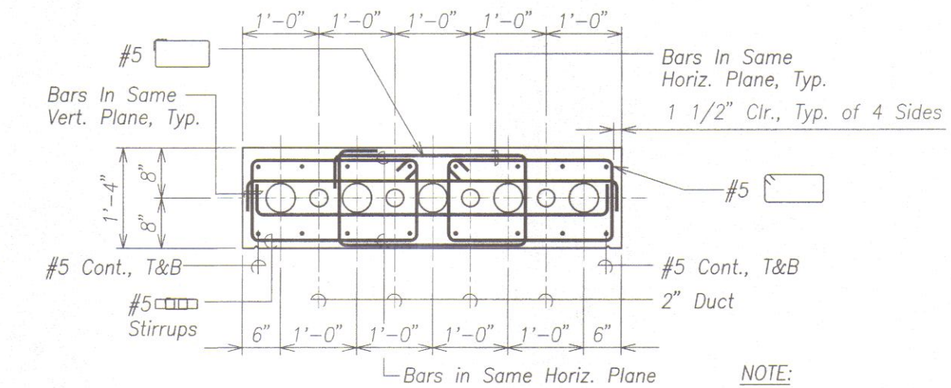

SECTION

B SB6.5 SB6.5

Scale: 1" = 1'-0"

NOTE:

For additional details see Sheets SB6.2 through SB6.4.

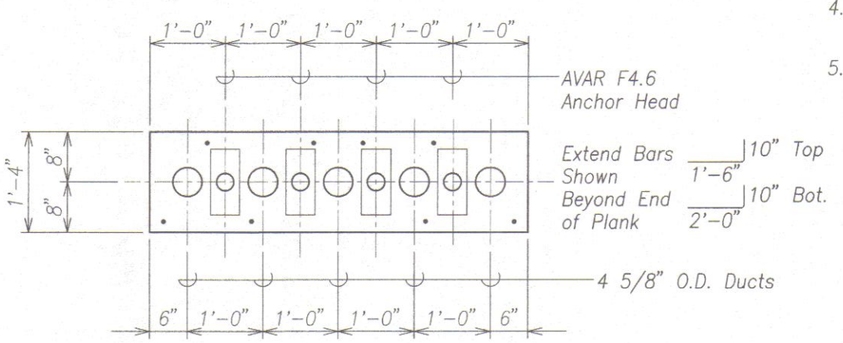

ALT. "B" ELEVATION AT STIFFENER BEAM

Scale: 1" = 1'-0"

NOTES:

1. Post Tensioning Ducts shall be supported horizontally and vertically at intervals not exceeding 4-ft.
2. Alternate Stirrups "A" and "B".
3. Stirrups "A" and "B" are #5 bars.
4. Coordinate Alt. "A" and Alt. "B" ends at Stiffener Beams.
5. 4 5/8" OD Ducts shown are for PATP lines 1-3, see Sheet SB15.1.

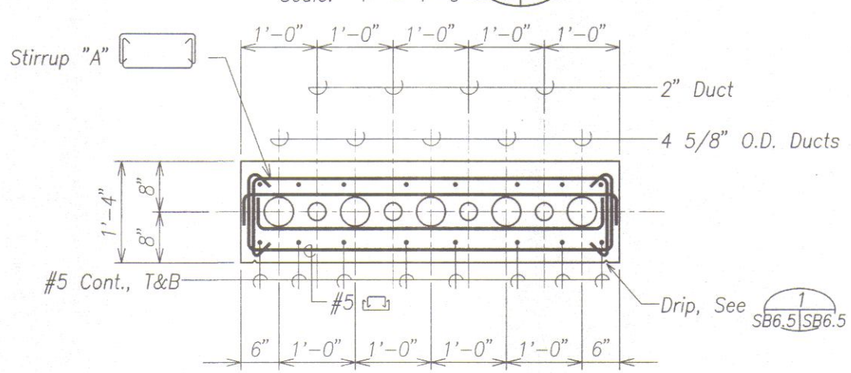

SECTION

C SB6.5 SB6.5

Scale: 1" = 1'-0"

ELEVATION OF ARCH TIE PLANK ENDS

A SB6.5 SB6.5

Scale: 1" = 1'-0"

DAVID K. FUJIWARA LICENSED PROFESSIONAL ENGINEER NO. 8104-S HAWAII, U.S.A.

THIS WORK WAS PREPARED BY ME OR UNDER MY SUPERVISION.

KSF, INC. APRIL 30, 2012 LIC. EXP. DATE

STATE OF HAWAII
DEPARTMENT OF TRANSPORTATION
HIGHWAYS DIVISION

PRECAST ARCH TIE PLANK

HONOAPIILANI HIGHWAY REALIGNMENT, PHASE 1A
Future Keawe St Extension to Lahainaluna Rd, Part B
Fed. Aid Proj. No. NH-030-1(35)R

Scale: As Noted Date: June, 2010

SHEET No. SB6.5 OF 6 SHEETS

ORIGINAL PLAN | SURVEY PLOTTED BY | DRAWN BY | TRACED BY | DESIGNED BY | QUANTITIES BY | CHECKED BY | NOTE BOOK No. | DATE

DRAWING NAME: Z:\00 ONGOING\40019.0-HONOAPIILANI LAHAINA BYPASS-KAHOMA WO\06-15-10 COMBINE LAHAINA FINAL DESIGN\HH-SB605.DWG PLOT TIME: 06-14-10, 3:16 PM)

FINAL DESIGN 303

FED. ROAD DIST. NO.	STATE	FED. AID PROJ. NO.	FISCAL YEAR	SHEET NO.	TOTAL SHEETS
HAWAII	HAW.	NH-030-1(35)R	2009	304	383

PRECAST ARCH TIE PLANK NOTES:

1. Ducts for Continuous Tendons are at a constant elevation (at mid-depth of PATP). See Sheet SB15.1 for information on Continuous Tendons.
2. Post-Tensioning Ducts for 4x0.6 Tendons shall be 2" O.D. Spiro-Type Semi-Rigid galvanized.
3. After post-tensioning, Tendons shall be pressure grouted w/ Masterflow 1205 Cable Grout or Sika Grout 300 PT or equal. Ducts shall have grouting vents at anchorage and at each high point along the Tendon profile.
4. Duct shall be secured to prevent misalignment during concreting.
   Post-Tensioning Ducts shall be supported horizontally and vertically at intervals not exceeding 4-ft.
5. A minimum compressive strength of 8000 PSI shall be obtained in the PATP before the application of post-tensioning.
6. Post-Tensioned Strands shall be 7 wire 0.6 dia. low relaxation steel strands (Area = 0.217 in.^{2}) with an ultimate tensile strength of 270 ksi. For properties, see "Special Provisions".
7. The Post-Tensioning design assumptions are as follows:

Curve Friction Coefficient	0.18
Wobble Friction Coefficient	0.0002/ft.
Anchor Set	3/8"

8. The design jacking force at end of each 4x0.6 Tendon = 175K. The maximum stress in the Strand before anchor set in is 75% of the guaranteed ultimate strength.
9. Post-Tensioning Anchor for 4x0.6 PATP Tendons shall be AVAR F4.6 or equal.
10. All Anchor Heads and protruding Strands shall be coated with CORTEC VpCI 391.

DAVID K. FUJIWARA
LICENSED PROFESSIONAL ENGINEER
NO. 8104-S
HAWAII, U.S.A.

THIS WORK WAS PREPARED BY ME OR UNDER MY SUPERVISION.

KSF, INC. — APRIL 30, 2012 UC. EXP. DATE

STATE OF HAWAII
DEPARTMENT OF TRANSPORTATION
HIGHWAYS DIVISION

PRECAST ARCH TIE PLANK NOTES

HONOAPIILANI HIGHWAY REALIGNMENT, PHASE 1A
Future Keawe St Extension to Lahainaluna Rd, Part B
Fed. Aid Proj. No. NH-030-1(35)R

Scale: As Noted Date: June, 2010

SHEET No. SB6.6 OF 6 SHEETS

FINAL DESIGN 304

ORIGINAL PLAN	SURVEY PLOTTED BY	DATE
	DRAWN BY	
NOTE BOOK	PLOTTED BY	
	DESIGNED BY	
No.	QUANTITIES BY	
	CHECKED BY	

DRAWING NAME: Z:\DO ONGOING\40019.0-HONOAPIILANI LAHAINA BYPASS-KAHOMA WO\06-15-10 COMBINE LAHAINA FINAL DESIGN\HH-SB606.DWG PLOT TIME: 06-14-10, 3:17 PM

FED. ROAD DIST. NO.	STATE	FED. AID PROJ. NO.	FISCAL YEAR	SHEET NO.	TOTAL SHEETS
HAWAII	HAW.	NH-030-1(35)R	2009	305	383

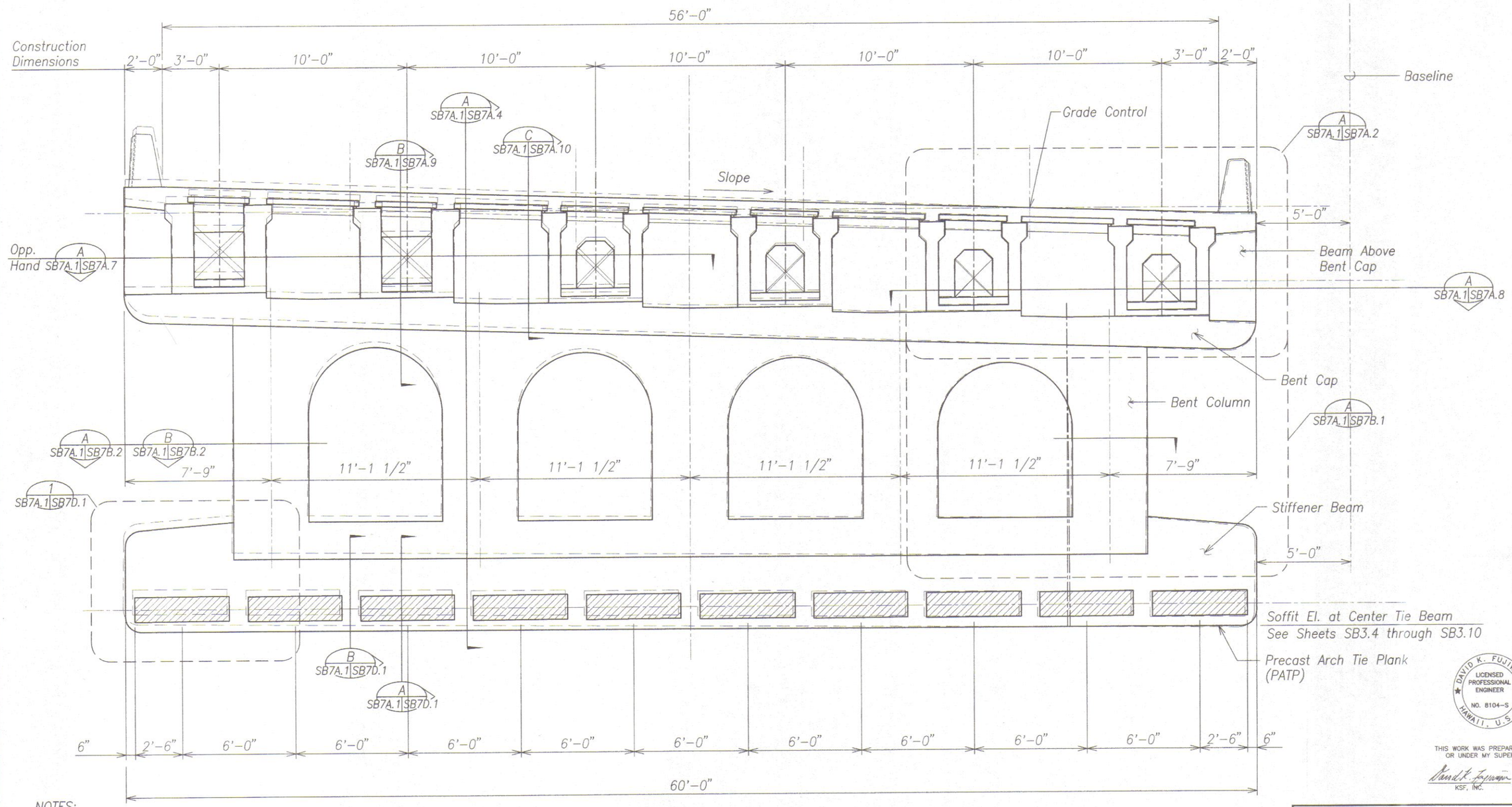

NOTES:

1. See Sheet SB7A Series for Beam above Bent Cap.
2. See Sheet SB7C Series for Bent Cap.
3. See Sheet SB7B Series for Bent.
4. See Sheet SB7D Series for Stiffener Beam.
5. See Sheet SB7B Series for PATP.

LEGEND:

— — — Construction Phase
——— Final Design

MAUKA BRIDGE (OUT-BOUND)

TYPICAL BENT ELEVATION (1 SB7A.1 SB7A.1)

Scale: 3/8" = 1'-0"

DAVID K. FUJIWARA LICENSED PROFESSIONAL ENGINEER NO. 8104-S HAWAII, U.S.A.

THIS WORK WAS PREPARED BY ME OR UNDER MY SUPERVISION.

KSF, INC. APRIL 30, 2012 LIC. EXP. DATE

STATE OF HAWAII
DEPARTMENT OF TRANSPORTATION
HIGHWAYS DIVISION

TYPICAL BENT ELEVATION

HONOAPIILANI HIGHWAY REALIGNMENT, PHASE 1A
Future Keawe St Extension to Lahainaluna Rd, Part B
Fed. Aid Proj. No. NH-030-1(35)R

Scale: As Noted Date: June, 2010

SHEET No. SB7A.1 OF 10 SHEETS

FINAL DESIGN 305

ORIGINAL PLAN | SURVEY PLOTTED BY | DRAWN BY | TRACED BY | DESIGNED BY | QUANTITIES BY | CHECKED BY | DATE
NOTE BOOK No.

DRAWING NAME: Z:\00 ONGOING\40019.0-HONOAPIILANI LAHAINA BYPASS-KAHOMA WO\06-15-10 COMBINE LAHAINA FINAL DESIGN\HH-SB7D0A1.DWG PLOT TIME: 06-14-10, 3:18 PM)

FED. ROAD DIST. NO.	STATE	FED. AID PROJ. NO.	FISCAL YEAR	SHEET NO.	TOTAL SHEETS
HAWAII	HAW.	NH-030-1(35)R	2009	306	383

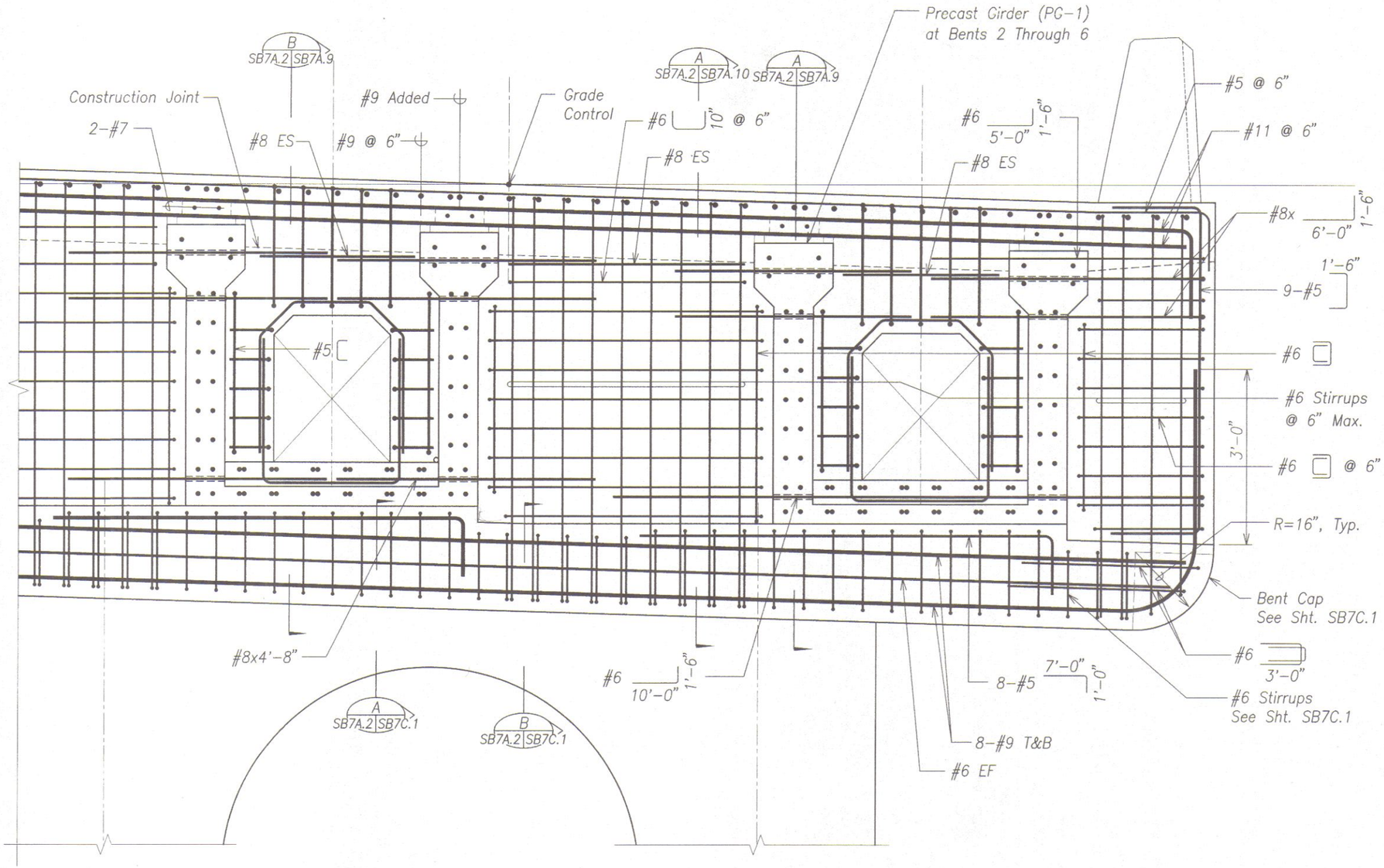

CIP BEAM ABOVE BENT CAP AT FACE OF CAP

Scale: 1" = 1'-0"

A
SB7A.1 SB7A.2
SB7A.8

DAVID K. FUJIWARA
LICENSED PROFESSIONAL ENGINEER
NO. 8104-S
HAWAII, U.S.A.

THIS WORK WAS PREPARED BY ME OR UNDER MY SUPERVISION.

KSF, INC. — APRIL 30, 2012 LIC. EXP. DATE

STATE OF HAWAII
DEPARTMENT OF TRANSPORTATION
HIGHWAYS DIVISION

CIP BEAM ABOVE BENT CAP

HONOAPIILANI HIGHWAY REALIGNMENT, PHASE 1A
Future Keawe St Extension to Lahainaluna Rd, Part B
Fed. Aid Proj. No. NH-030-1(35)R

Scale: As Noted — Date: June, 2010

SHEET No. SB7A.2 OF 10 SHEETS

ORIGINAL PLAN | NOTE BOOK No. | SURVEY PLOTTED BY | DRAWN BY | TRACED BY | DESIGNED BY | QUANTITIES BY | CHECKED BY | DATE

DRAWING NAME: Z:\00 ONGOING\40019.0-HONOAPIILANI LAHAINA BYPASS-KAHOMA WO\06-15-10 COMBINE LAHAINA FINAL DESIGN\HH-SB7OOA2.DWG PLOT TIME: 06-14-10, 3:18 PM

FINAL DESIGN 306

FED. ROAD DIST. NO.	STATE	FED. AID PROJ. NO.	FISCAL YEAR	SHEET NO.	TOTAL SHEETS
HAWAII	HAW.	NH-030-1(35)R	2009	307	383

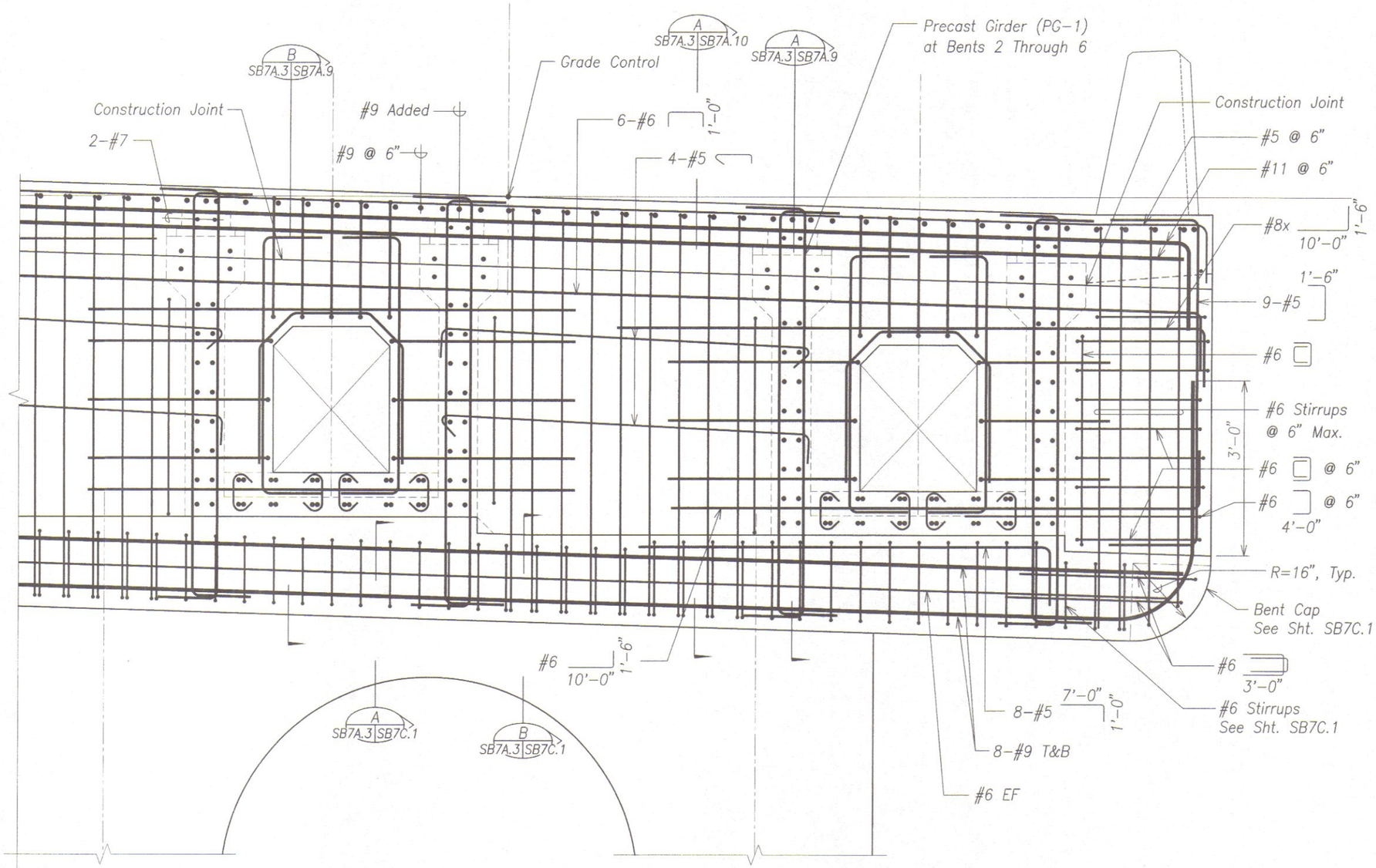

CIP BEAM ABOVE BENT CAP THRU ℄ BENTS

Scale: 1" = 1'-0"

A
SB7A.1 SB7A.3
SB7A.8

DAVID K. FUJIWARA
LICENSED PROFESSIONAL ENGINEER
NO. 8104-S
HAWAII, U.S.A.

THIS WORK WAS PREPARED BY ME OR UNDER MY SUPERVISION.

David K. Fujiwara
KSF, INC.

APRIL 30, 2012
LIC. EXP. DATE

STATE OF HAWAII
DEPARTMENT OF TRANSPORTATION
HIGHWAYS DIVISION

CIP BEAM ABOVE BENT CAP

HONOAPIILANI HIGHWAY REALIGNMENT, PHASE 1A
Future Keawe St Extension to Lahainaluna Rd, Part B
Fed. Aid Proj. No. NH-030-1(35)R

Scale: As Noted Date: June, 2010

SHEET No. SB7A.3 OF 10 SHEETS

ORIGINAL PLAN
NOTE BOOK No.
SURVEY PLOTTED BY
DRAWN BY
TRACED BY
DESIGNED BY
QUANTITIES BY
CHECKED BY
DATE

DRAWING NAME: Z:\00 ONGOING\40019.0-HONOAPIILANI LAHAINA BYPASS-KAHOMA WO\06-15-10 COMBINE LAHAINA FINAL DESIGN\HH-SB7C0A2.DWG PLOT TIME: 06-14-10, 3:18 PM

FED. ROAD DIST. NO.	STATE	FED. AID PROJ. NO.	FISCAL YEAR	SHEET NO.	TOTAL SHEETS
HAWAII	HAW.	NH-030-1(35)R	2009	308	383

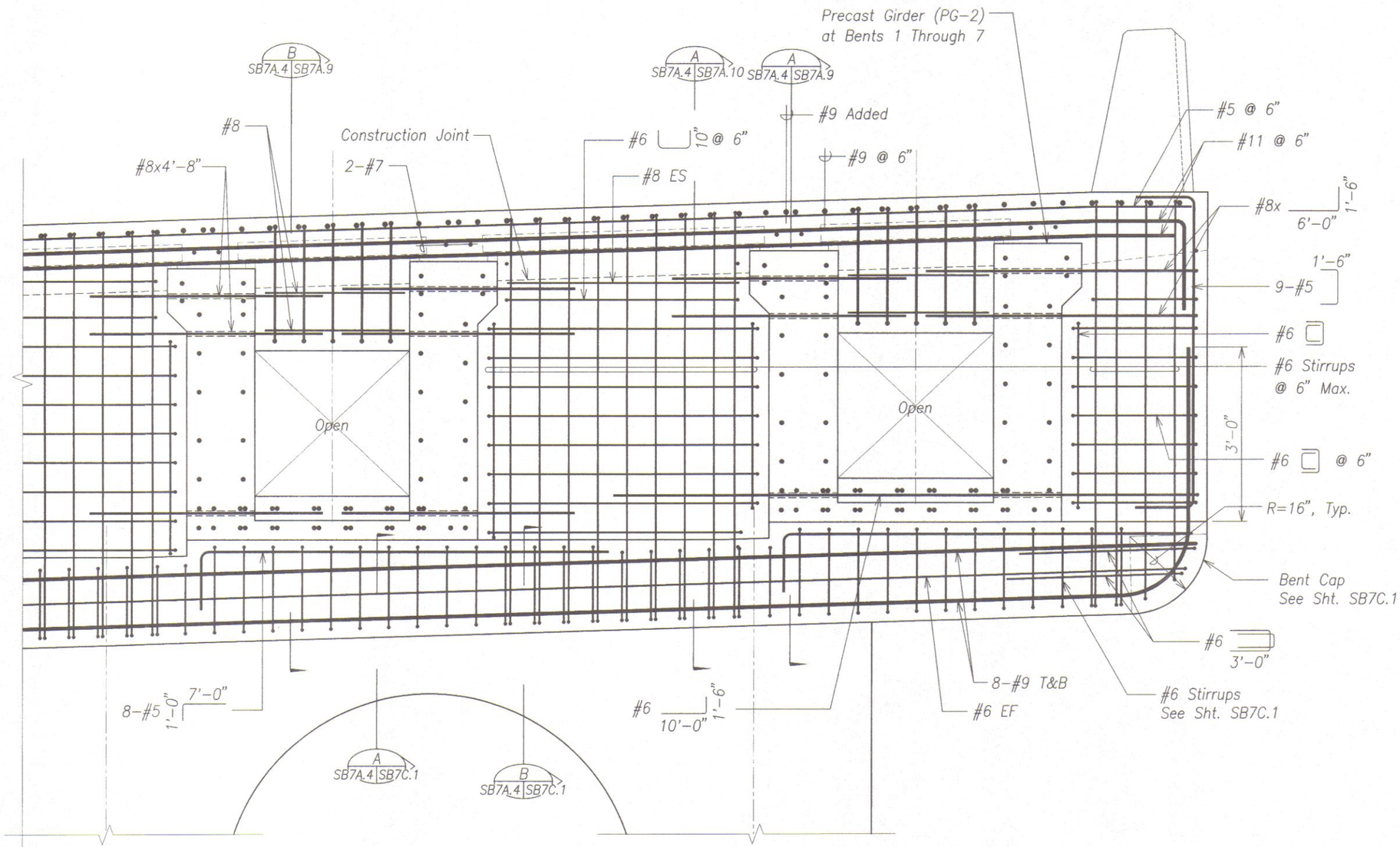

CIP BEAM ABOVE BENT CAP AT FACE OF CAP (A SB7A.1 SB7A.4)

Scale: 1" = 1'-0"

DAVID K. FUJIMARA
LICENSED PROFESSIONAL ENGINEER
NO. 8104-S
HAWAII, U.S.A.

THIS WORK WAS PREPARED BY ME OR UNDER MY SUPERVISION.

KSF, INC. — APRIL 30, 2012 LIC. EXP. DATE

STATE OF HAWAII
DEPARTMENT OF TRANSPORTATION
HIGHWAYS DIVISION

CIP BEAM ABOVE BENT CAP

HONOAPIILANI HIGHWAY REALIGNMENT, PHASE 1A
Future Keawe St Extension to Lahainaluna Rd, Part B
Fed. Aid Proj. No. NH-030-1(35)R

Scale: As Noted — Date: June, 2010

SHEET No. SB7A.4 OF 10 SHEETS

ORIGINAL PLAN | SURVEY PLOTTED BY | DRAWN BY | TRACED BY | DESIGNED BY | QUANTITIES BY | CHECKED BY | DATE | NOTE BOOK No.

DRAWING NAME: Z:\00 ONGOING\40019.0-HONOAPIILANI LAHAINA BYPASS-KAHOMA WO\06-15-10 COMBINE LAHAINA FINAL DESIGN\HI-SB7C0A2.DWG PLOT TIME: 06-14-10, 3:19 PM

FED. ROAD DIST. NO.	STATE	FED. AID PROJ. NO.	FISCAL YEAR	SHEET NO.	TOTAL SHEETS
HAWAII	HAW.	NH-030-1(35)R	2009	309	383

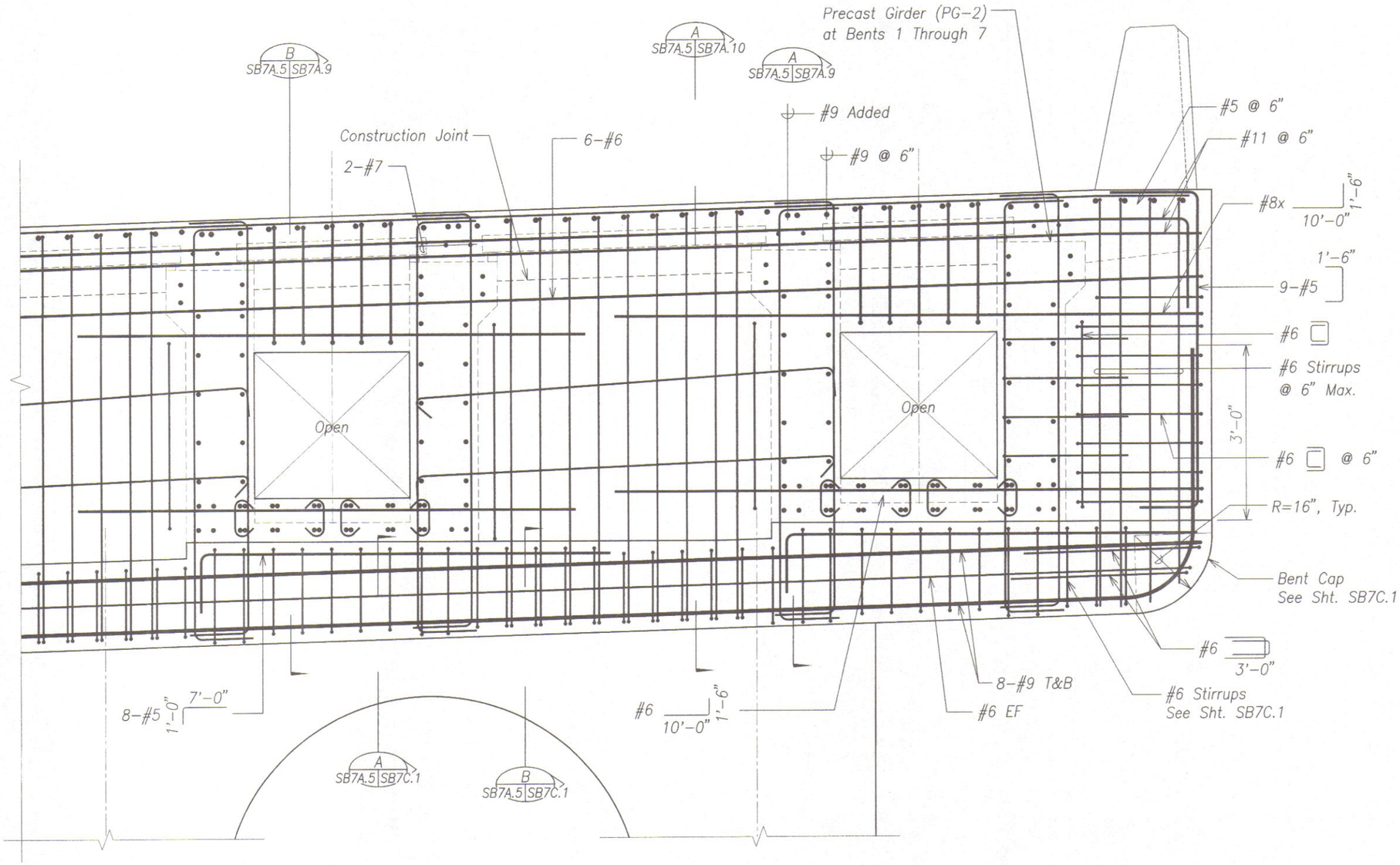

CIP BEAM ABOVE BENT CAP THRU ℄ BENT

Scale: 1" = 1'-0"

A
SB7A.1 SB7A.5
SB7A.7

DAVID K. FUJIWARA
LICENSED PROFESSIONAL ENGINEER
NO. 8104-S
HAWAII, U.S.A.

THIS WORK WAS PREPARED BY ME OR UNDER MY SUPERVISION.

KSF, INC. — APRIL 30, 2012 LIC. EXP. DATE

STATE OF HAWAII
DEPARTMENT OF TRANSPORTATION
HIGHWAYS DIVISION

CIP BEAM ABOVE BENT CAP

HONOAPIILANI HIGHWAY REALIGNMENT, PHASE 1A
Future Keawe St Extension to Lahainaluna Rd, Part B
Fed. Aid Proj. No. NH-030-1(35)R

Scale: As Noted — Date: June, 2010

SHEET No. SB7A.5 OF 10 SHEETS

ORIGINAL PLAN	SURVEY PLOTTED BY	DATE
	DRAWN BY	
	TRACED BY	
NOTE BOOK	DESIGNED BY	
	QUANTITIES BY	
No.	CHECKED BY	

DRAWING NAME: Z:\00 ONGOING\40919.0-HONOAPIILANI LAHAINA BYPASS-KAHOMA WO\06-15-10 COMBINE LAHAINA FINAL DESIGN\HH-SB70042.DWG PLOT TIME: 06-14-10, 3:19 PM

FED. ROAD DIST. NO.	STATE	FED. AID PROJ. NO.	FISCAL YEAR	SHEET NO.	TOTAL SHEETS
HAWAII	HAW.	NH-030-1(35)R	2009	310	383

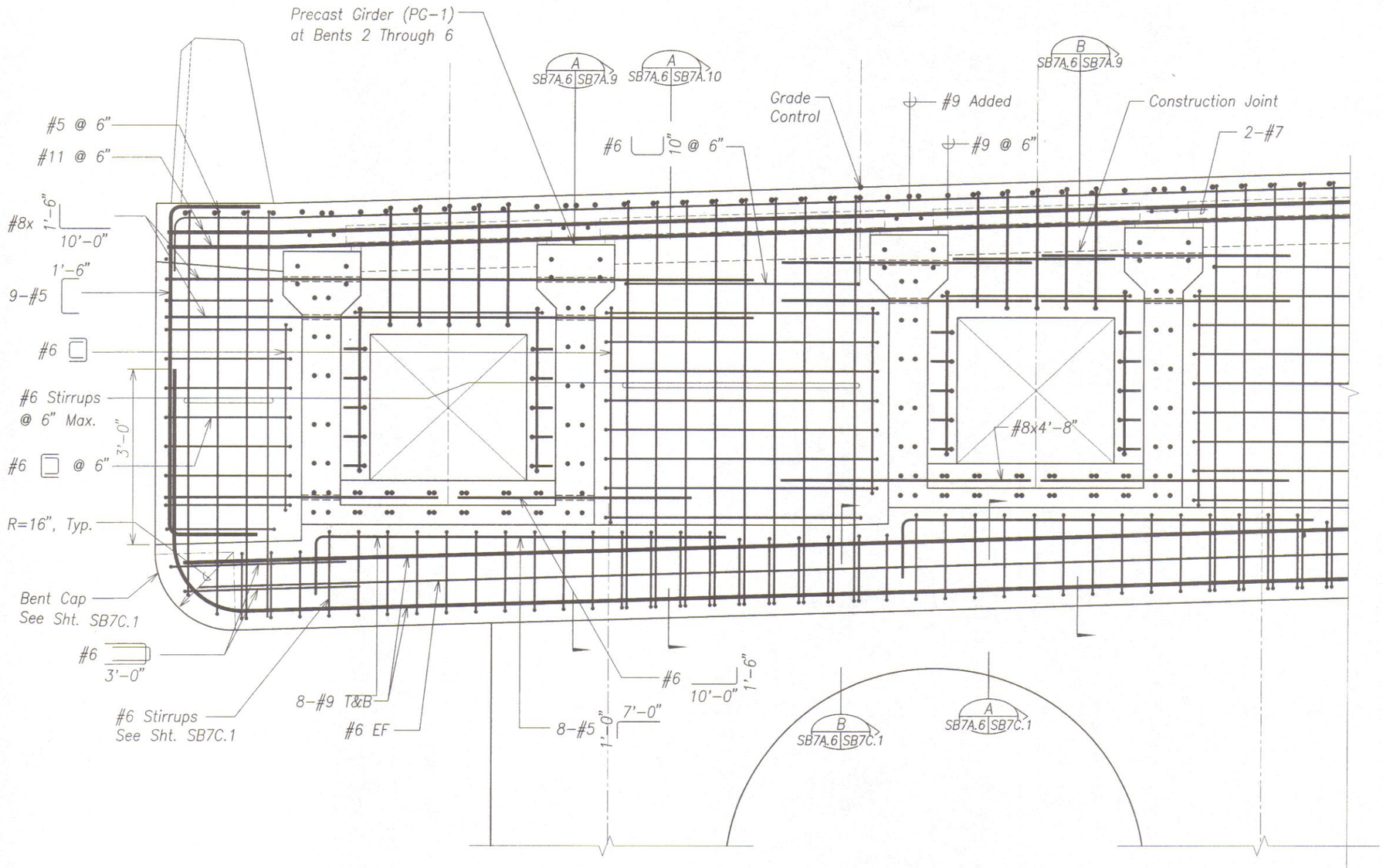

CIP BEAM ABOVE BENT CAP AT FACE OF CAP

Scale: 1" = 1'-0"

A
SB7A.1 SB7A.6
SB7A.7

DAVID K. FUJIWARA
LICENSED PROFESSIONAL ENGINEER
NO. 8104-S
HAWAII, U.S.A.

THIS WORK WAS PREPARED BY ME OR UNDER MY SUPERVISION.

KSF, INC. APRIL 30, 2012
LIC. EXP. DATE

STATE OF HAWAII
DEPARTMENT OF TRANSPORTATION
HIGHWAYS DIVISION

CIP BEAM ABOVE BENT CAP

HONOAPIILANI HIGHWAY REALIGNMENT, PHASE 1A
Future Keawe St Extension to Lahainaluna Rd, Part B
Fed. Aid Proj. No. NH-030-1(35)R

Scale: As Noted Date: June, 2010

SHEET No. SB7A.6 OF 10 SHEETS

ORIGINAL PLAN | NOTE BOOK No. | SURVEY PLOTTED BY | DRAWN BY | TRACED BY | DESIGNED BY | QUANTITIES BY | CHECKED BY | DATE

DRAWING NAME: Z:\00 ONGOING\40019.0-HONOAPIILANI LAHAINA BYPASS-KAHOMA WO\06-15-10 COMBINE LAHAINA FINAL DESIGN\HH-SB7D0A2.DWG PLOT TIME: 06-14-10, 3:19 PM

FINAL DESIGN 310

FED. ROAD DIST. NO.	STATE	FED. AID PROJ. NO.	FISCAL YEAR	SHEET NO.	TOTAL SHEETS
HAWAII	HAW.	NH-030-1(35)R	2009	311	383

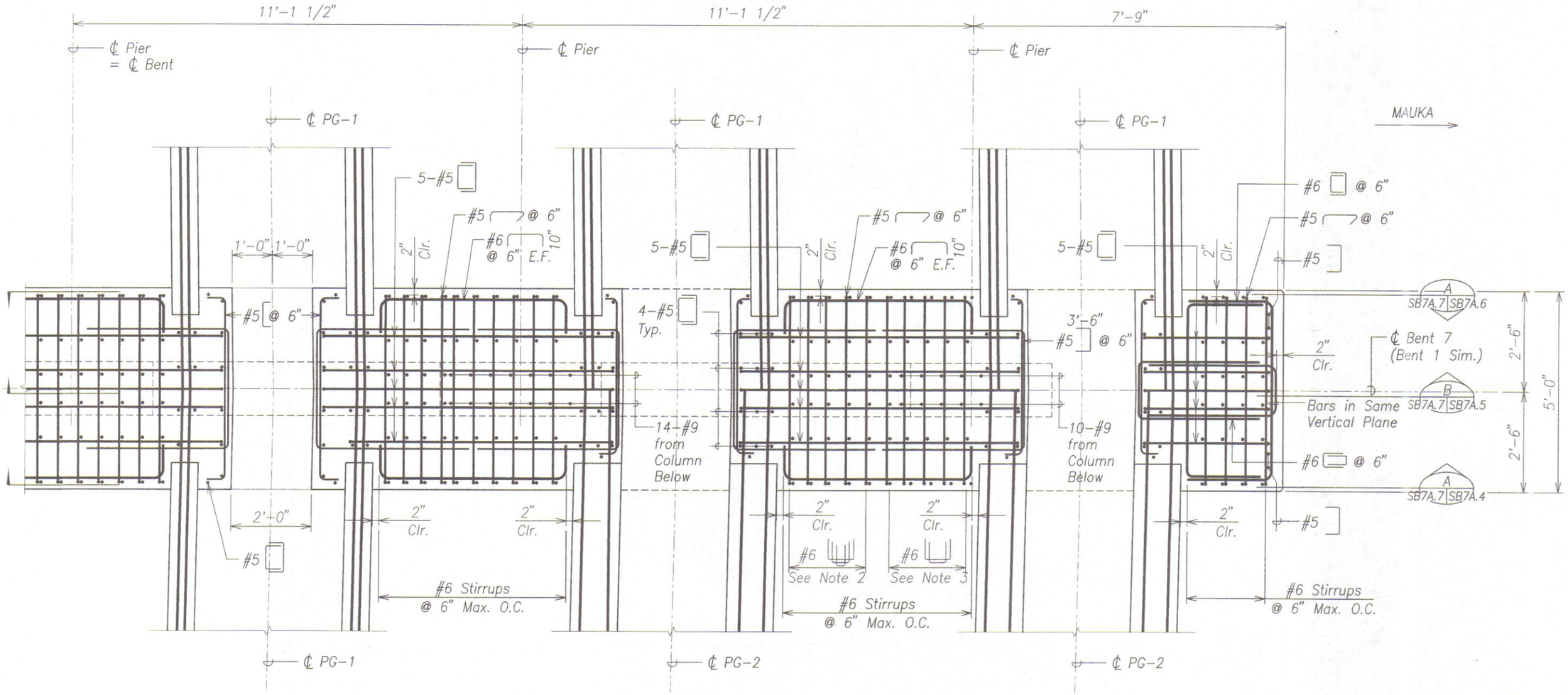

REINFORCING AT CIP BENT CAP

Scale: 3/4" = 1'-0"

A SB7A.1 SB7A.7

SB7A.2

NOTES:

1. Girder vertical bars are not shown for clarity.
2. Locate #6 where vertical column reinforcing does not occur (Typ.).
3. Locate #6 where vertical column reinforcing occurs (Typ.).

DAVID K. FUJIWARA LICENSED PROFESSIONAL ENGINEER NO. 8104-S HAWAII, U.S.A.

THIS WORK WAS PREPARED BY ME OR UNDER MY SUPERVISION.

KSF, INC. APRIL 30, 2012 LIC. EXP. DATE

STATE OF HAWAII
DEPARTMENT OF TRANSPORTATION
HIGHWAYS DIVISION

CIP BEAM ABOVE BENT CAP

HONOAPIILANI HIGHWAY REALIGNMENT, PHASE 1A
Future Keawe St Extension to Lahainaluna Rd, Part B
Fed. Aid Proj. No. NH-030-1(35)R

Scale: As Noted Date: June, 2010

SHEET No. SB7A.7 OF 10 SHEETS

ORIGINAL PLAN | SURVEY PLOTTED BY | DRAWN BY | TRACED BY | DESIGNED BY | QUANTITIES BY | CHECKED BY | DATE
NOTE BOOK No.

DRAWING NAME: Z:\00 ONGOING\40019.0-HONOAPIILANI LAHAINA BYPASS-KAHOMA WD\06-15-10 COMBINE LAHAINA FINAL DESIGN\HI-SB70A7.DWG PLOT TIME: 06-14-10, 3:20 PM

FED. ROAD DIST. NO.	STATE	FED. AID PROJ. NO.	FISCAL YEAR	SHEET NO.	TOTAL SHEETS
HAWAII	HAW.	NH-030-1(35)R	2009	312	383

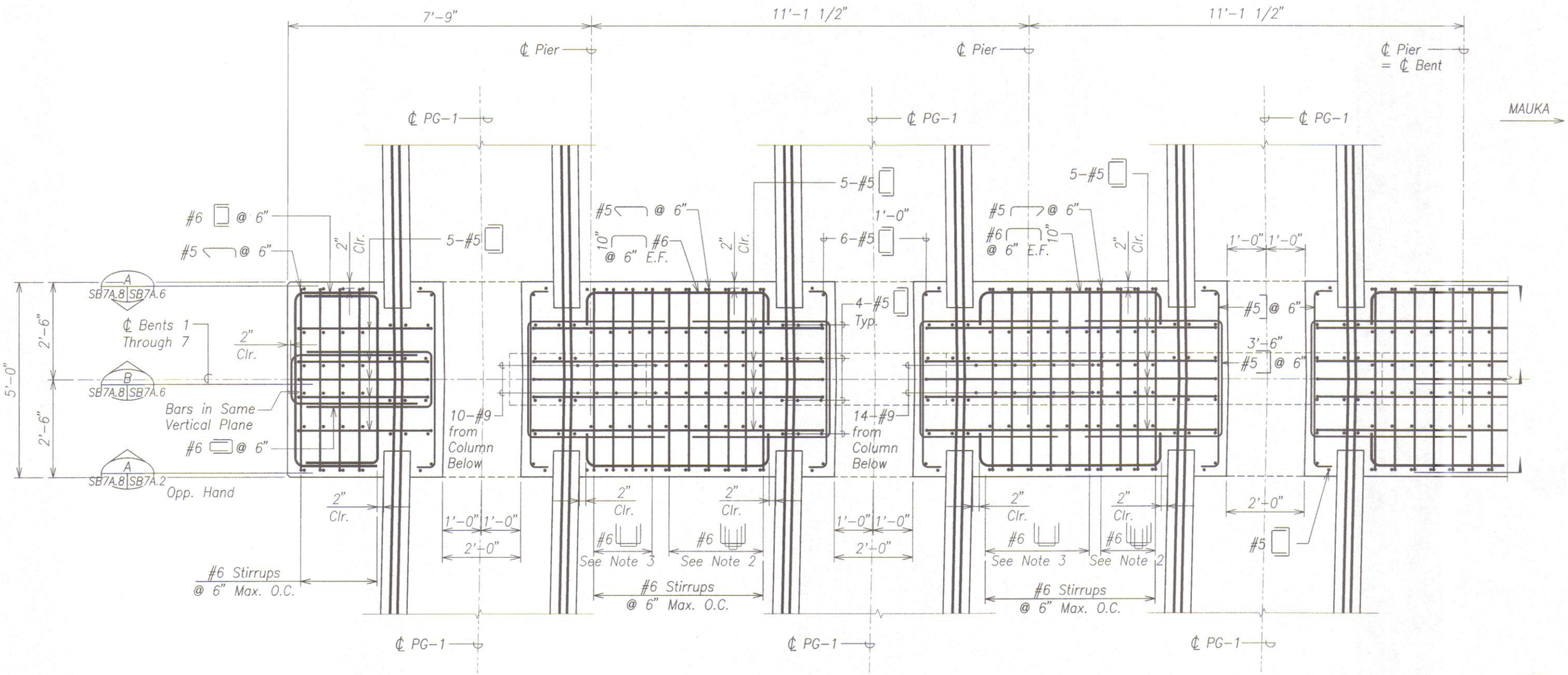

REINFORCING AT CIP BENT CAP

A SB7A.1 SB7A.8

Scale: 3/4" = 1'-0"

NOTES:

1. Girder vertical bars are not shown for clarity.
2. Locate #6 where vertical column reinforcing does not occur (Typ.).
3. Locate #6 where vertical column reinforcing occurs (Typ.).

DAVID K. FUJIWARA LICENSED PROFESSIONAL ENGINEER NO. 8104-S HAWAII, U.S.A.

THIS WORK WAS PREPARED BY ME OR UNDER MY SUPERVISION.

KSF, INC. APRIL 30, 2012 LIC. EXP. DATE

STATE OF HAWAII
DEPARTMENT OF TRANSPORTATION
HIGHWAYS DIVISION

CIP BEAM ABOVE BENT CAP

HONOAPIILANI HIGHWAY REALIGNMENT, PHASE 1A
Future Keawe St Extension to Lahainaluna Rd, Part B
Fed. Aid Proj. No. NH-030-1(35)R

Scale: As Noted Date: June, 2010

SHEET No. SB7A.8 OF 10 SHEETS

FINAL DESIGN 312

ORIGINAL PLAN	SURVEY PLOTTED BY	DATE
	DRAWN BY	
NOTE BOOK	TRACED BY	
	DESIGNED BY	
No.	QUANTITIES BY	
	CHECKED BY	

DRAWING NAME: Z:\00 ONGOING\40019.0-HONOAPIILANI LAHAINA BYPASS-KAHOMA WO\06-15-10 COMBINE LAHAINA FINAL DESIGN\HH-SB7A047.DWG PLOT TIME: 06-14-10, 3:20 PM)

FED. ROAD DIST. NO.	STATE	FED. AID PROJ. NO.	FISCAL YEAR	SHEET NO.	TOTAL SHEETS
HAWAII	HAW.	NH-030-1(35)R	2009	313	383

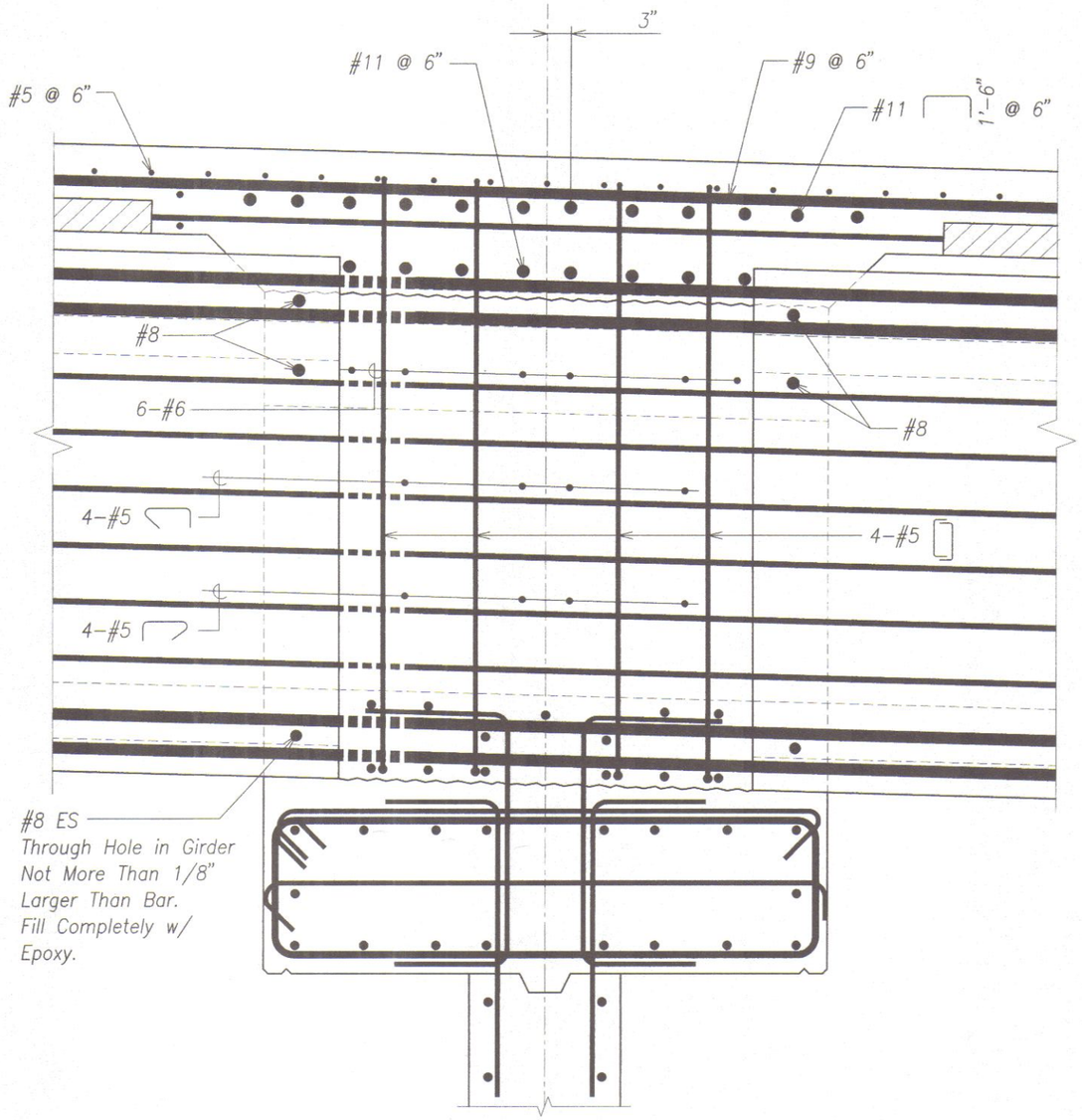

TYPICAL SECTION
THROUGH GIRDER STEMS (A) SB7A.2 | SB7A.9
Scale: 1 1/2" = 1'-0"

NOTE:
See SB7B series for bent information
& SB7C series of bent cap information.

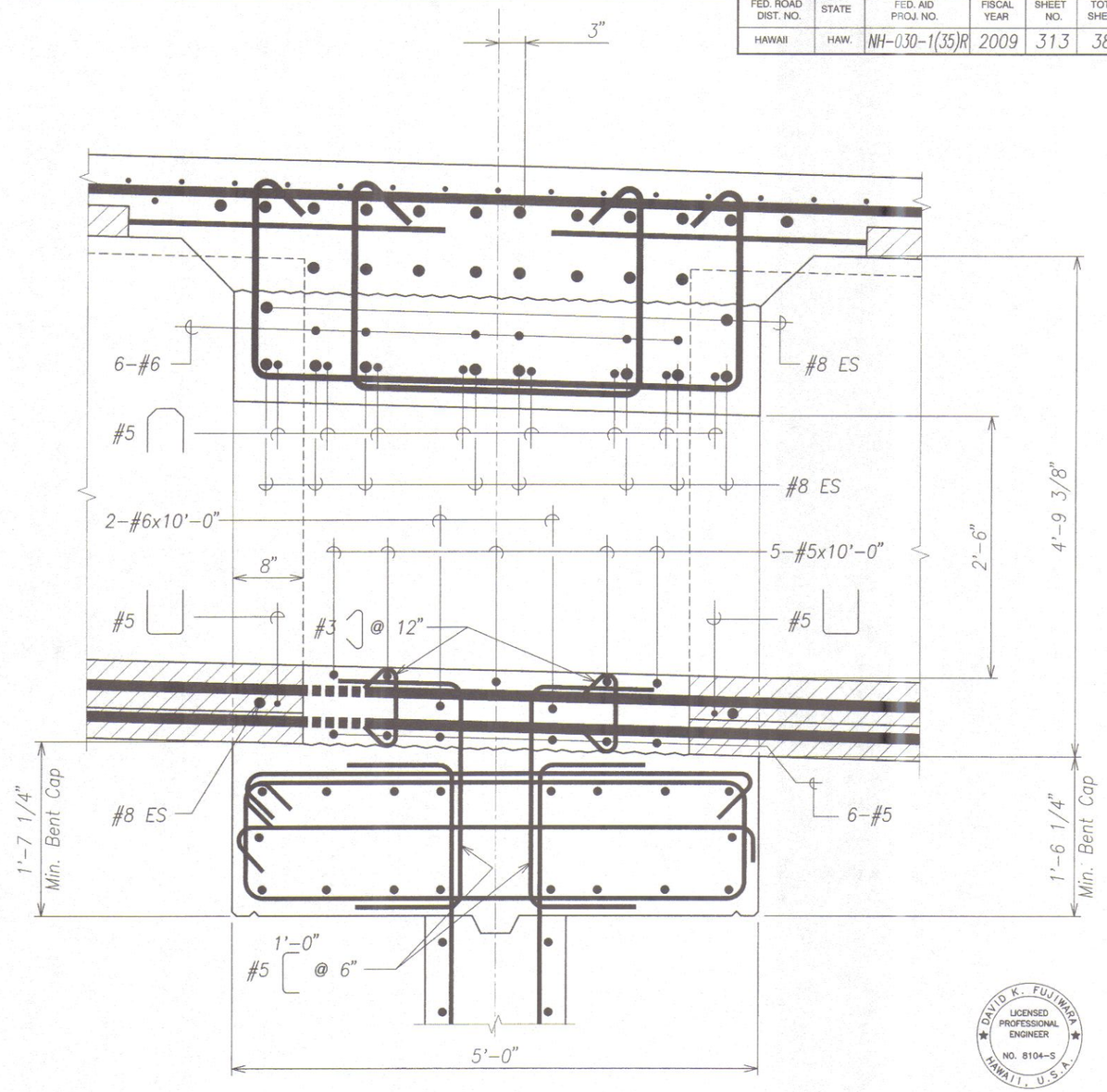

TYPICAL SECTION (INSIDE GIRDER)
BETWEEN GIRDER STEMS (B) SB7A.1 | SB7A.9
SB7A.2
Scale: 1 1/2" = 1'-0"

DAVID K. FUJIWARA
LICENSED PROFESSIONAL ENGINEER
NO. 8104-S
HAWAII, U.S.A.

THIS WORK WAS PREPARED BY ME
OR UNDER MY SUPERVISION.

KSF, INC. — APRIL 30, 2012 LIC. EXP. DATE

STATE OF HAWAII
DEPARTMENT OF TRANSPORTATION
HIGHWAYS DIVISION

CIP BEAM ABOVE BENT CAP

HONOAPIILANI HIGHWAY REALIGNMENT, PHASE 1A
Future Keawe St Extension to Lahainaluna Rd, Part B
Fed. Aid Proj. No. NH-030-1(35)R

Scale: As Noted — Date: June, 2010

SHEET No. SB7A.9 OF 10 SHEETS

ORIGINAL PLAN	SURVEY PLOTTED BY	DATE
NOTE BOOK	DRAWN BY	
	TRACED BY	
	DESIGNED BY	
	QUANTITIES BY	
No.	CHECKED BY	

DRAWING NAME: Z:\00 ONGOING\400190-HONOAPIILANI LAHAINA BYPASS-KAHOMA WO\06-15-10 COMBINE LAHAINA FINAL DESIGN\HH-SB70049.DWG PLOT TIME: 06-14-10, 3:20 PM

FINAL DESIGN 313

FED. ROAD DIST. NO.	STATE	FED. AID PROJ. NO.	FISCAL YEAR	SHEET NO.	TOTAL SHEETS
HAWAII	HAW.	NH-030-1(35)R	2009	314	383

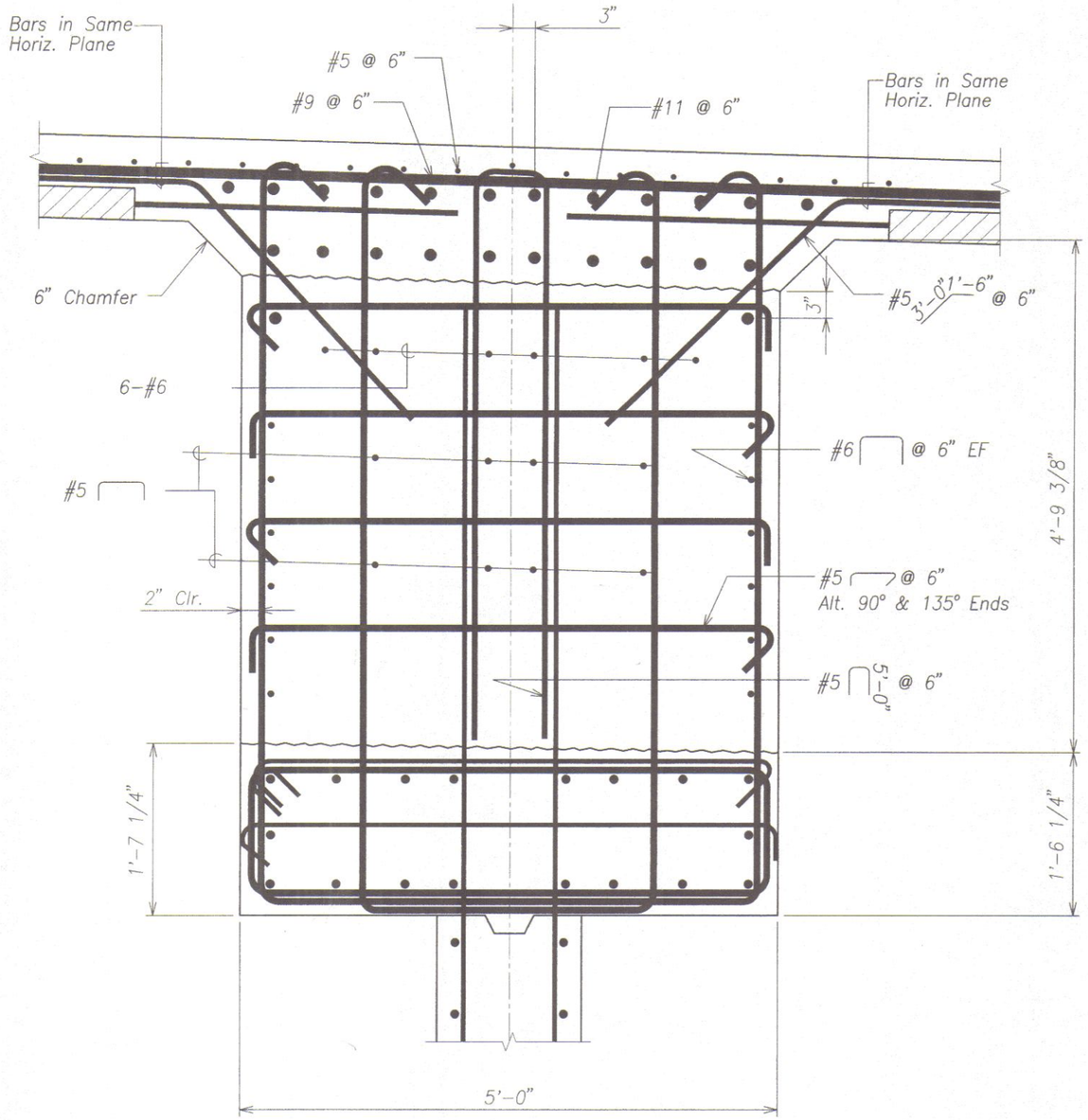

TYPICAL SECTION
BETWEEN GIRDERS

Scale: 1 1/2" = 1'-0"

A
SB7A.1 SB7A.10
SB7A.2

THIS WORK WAS PREPARED BY ME OR UNDER MY SUPERVISION.

KSF, INC. — APRIL 30, 2012 LIC. EXP. DATE

DAVID K. FUJIWARA — LICENSED PROFESSIONAL ENGINEER — NO. 8104-S — HAWAII, U.S.A.

STATE OF HAWAII
DEPARTMENT OF TRANSPORTATION
HIGHWAYS DIVISION

CIP BEAM ABOVE BENT CAP

HONOAPIILANI HIGHWAY REALIGNMENT, PHASE 1A
Future Keawe St Extension to Lahainaluna Rd, Part B
Fed. Aid Proj. No. NH-030-1(35)R

Scale: As Noted — Date: June, 2010

SHEET No. SB7A.10 OF 10 SHEETS

ORIGINAL PLAN — SURVEY PLOTTED BY, DRAWN BY, TRACED BY, DESIGNED BY, QUANTITIES BY, CHECKED BY — DATE
NOTE BOOK No.

DRAWING NAME: Z:\00 ONGOING\40019.0-HONOAPIILANI LAHAINA BYPASS-KAHOMA WO\06-15-10 COMBINE LAHAINA FINAL DESIGN\HH-SB70049.DWG PLOT TIME: 06-14-10, 3:21 PM

FED. ROAD DIST. NO.	STATE	FED. AID PROJ. NO.	FISCAL YEAR	SHEET NO.	TOTAL SHEETS
HAWAII	HAW.	NH-030-1(35)R	2009	315	383

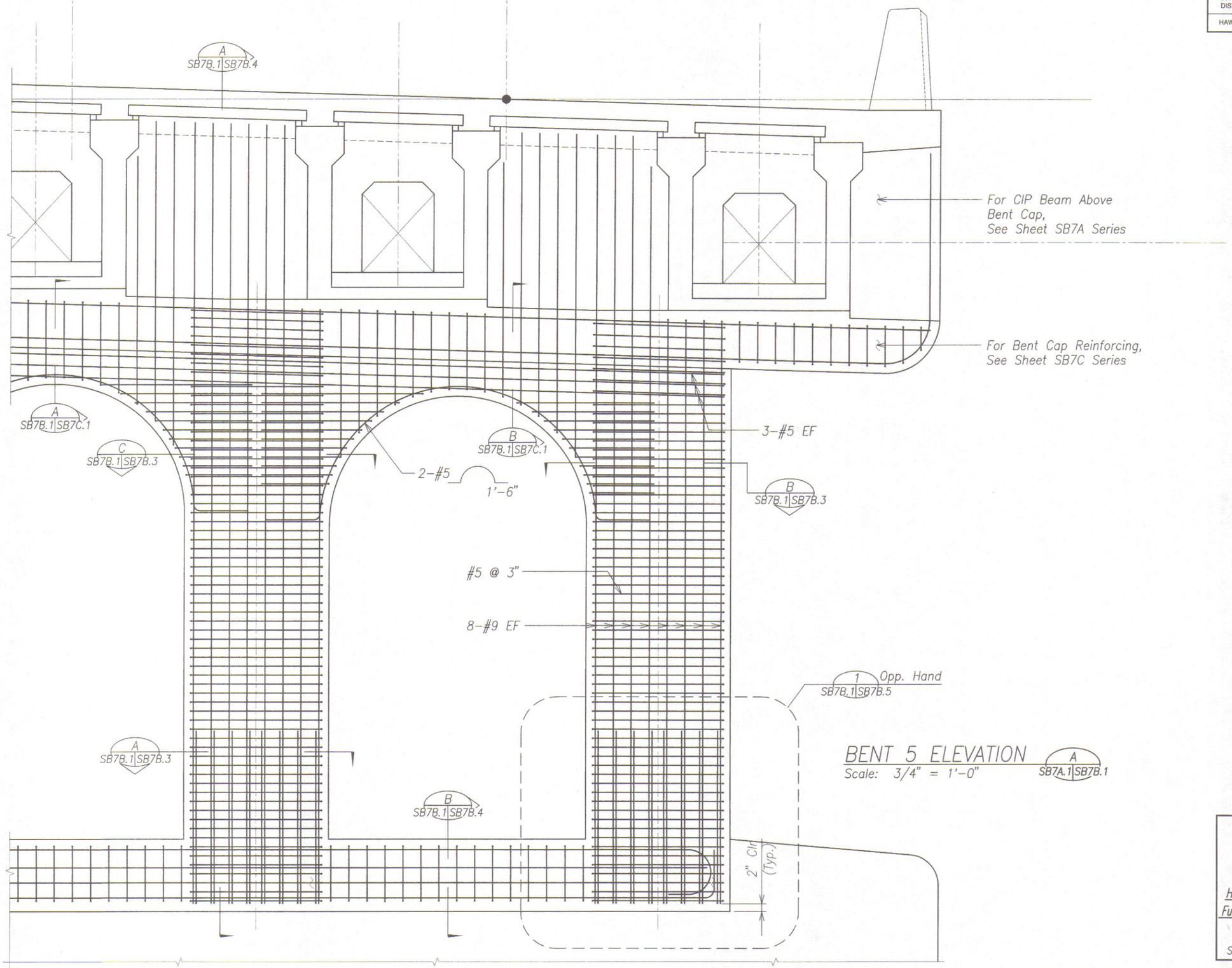

BENT 5 ELEVATION A SB7A.1 SB7B.1
Scale: 3/4" = 1'-0"

DAVID K. FUJIWARA
LICENSED PROFESSIONAL ENGINEER
NO. 8104-S
HAWAII, U.S.A.

THIS WORK WAS PREPARED BY ME OR UNDER MY SUPERVISION.

KSF, INC. APRIL 30, 2012
LIC. EXP. DATE

STATE OF HAWAII
DEPARTMENT OF TRANSPORTATION
HIGHWAYS DIVISION

BENT ELEVATION

HONOAPIILANI HIGHWAY REALIGNMENT, PHASE 1A
Future Keawe St Extension to Lahainaluna Rd, Part B
Fed. Aid Proj. No. NH-030-1(35)R

Scale: As Noted Date: June, 2010

SHEET No. SB7B.1 OF 5 SHEETS

ORIGINAL PLAN	SURVEY PLOTTED BY	DATE
	DRAWN BY	
NOTE BOOK	TRACED BY	
	DESIGNED BY	
No.	QUANTITIES BY	
	CHECKED BY	

DRAWING NAME: Z:\DD ONGOING\40019.0-HONOAPIILANI LAHAINA BYPASS-KAHOMA WO\06-15-10 COMBINE LAHAINA FINAL DESIGN\HH-SB700B1.DWG PLOT TIME: 06-14-10, 3:21 PM)

FED. ROAD DIST. NO.	STATE	FED. AID PROJ. NO.	FISCAL YEAR	SHEET NO.	TOTAL SHEETS
HAWAII	HAW.	NH-030-1(35)R	2009	316	383

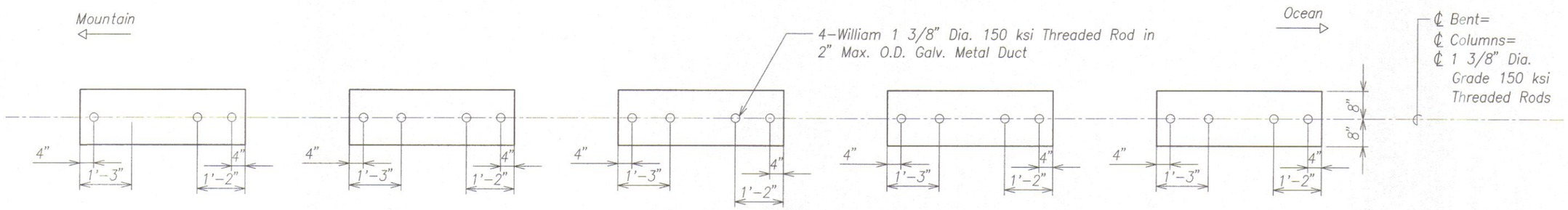

LAYOUT OF 1 3/8" DIA. GRADE 150 H.S. THREADED BARS (BENTS 1 AND 7)

Not to Scale

A
SB7B.2 | SB7B.2

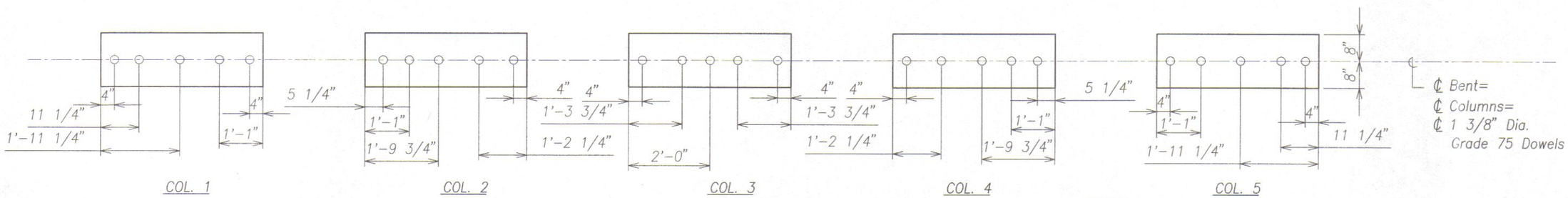

LAYOUT OF 1 3/8" DIA. GRADE 75 THREADED BARS (BENTS 2 THROUGH 6)

Not to Scale

B
SB7B.2 | SB7B.2

NOTES:

1. Contractor shall verify location of 1 3/8" diameter dowels with continuous PT Ducts in Stiffener Beam. If adjustments are required, verify with Engineer.
2. See Detail 1 on Sheet SB7B.4 for Epoxy Coating.

DAVID K. FUJIWARA
LICENSED PROFESSIONAL ENGINEER
NO. 8104-S
HAWAII, U.S.A.

THIS WORK WAS PREPARED BY ME OR UNDER MY SUPERVISION.

David K. Fujiwara APRIL 30, 2012
KSF, INC. LIC. EXP. DATE

STATE OF HAWAII
DEPARTMENT OF TRANSPORTATION
HIGHWAYS DIVISION

SECTIONS THROUGH COLUMNS

HONOAPIILANI HIGHWAY REALIGNMENT, PHASE 1A
Future Keawe St Extension to Lahainaluna Rd, Part B
Fed. Aid Proj. No. NH-030-1(35)R

Scale: As Noted Date: June, 2010

SHEET No. SB7B.2 OF 5 SHEETS

ORIGINAL PLAN | SURVEY PLOTTED BY | DRAWN BY | TRACED BY | DESIGNED BY | QUANTITIES BY | CHECKED BY | DATE
NOTE BOOK No.

DRAWING NAME: Z:\00 ONGOING\40019.0-HONOAPIILANI LAHAINA BYPASS-KAHOMA WO\06-15-10 COMBINE LAHAINA FINAL DESIGN\HH-SB700B2.DWG PLOT TIME: 06-14-10, 3:22 PM

FED. ROAD DIST. NO.	STATE	FED. AID PROJ. NO.	FISCAL YEAR	SHEET NO.	TOTAL SHEETS
HAWAII	HAW.	NH-030-1(35)R	2009	317	383

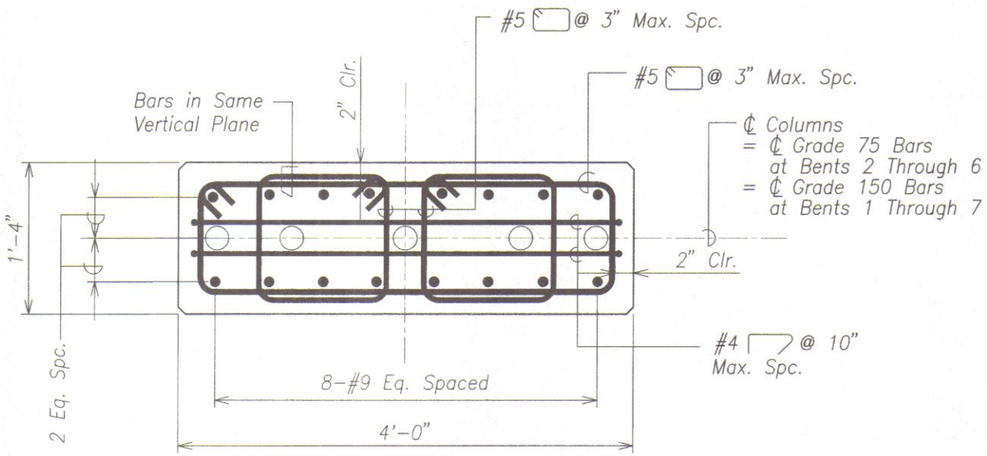

SECTION A
Scale: 1 1/2" = 1'-0" SB7B.1 SB7B.3

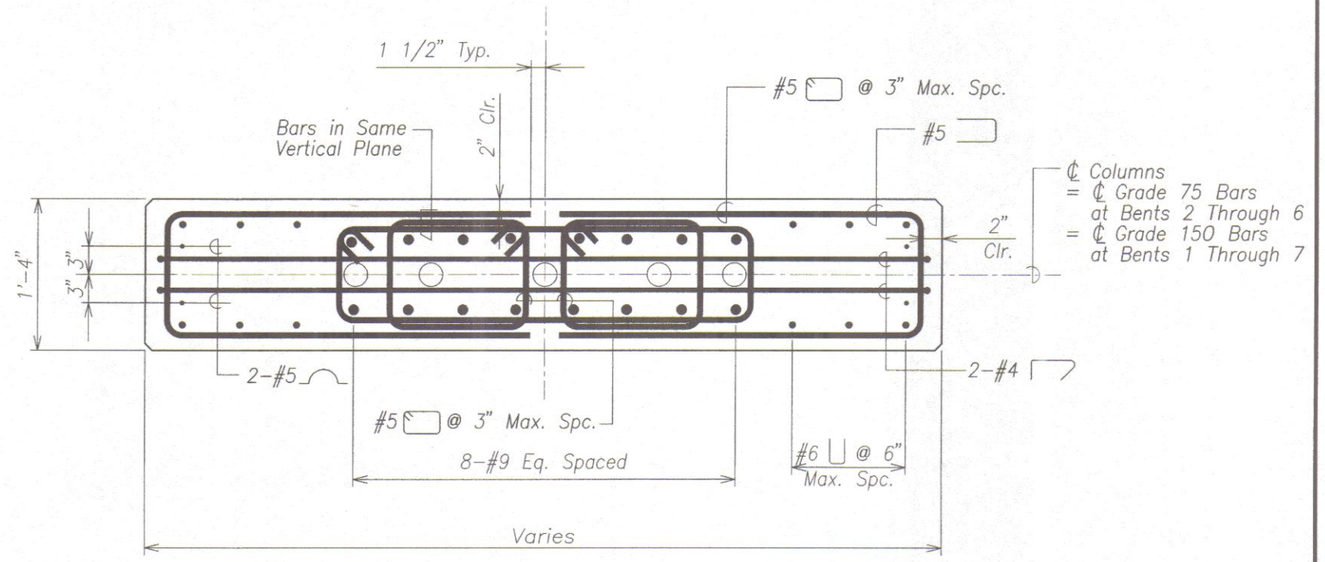

SECTION C
Scale: 1 1/2" = 1'-0" SB7B.1 SB7B.3

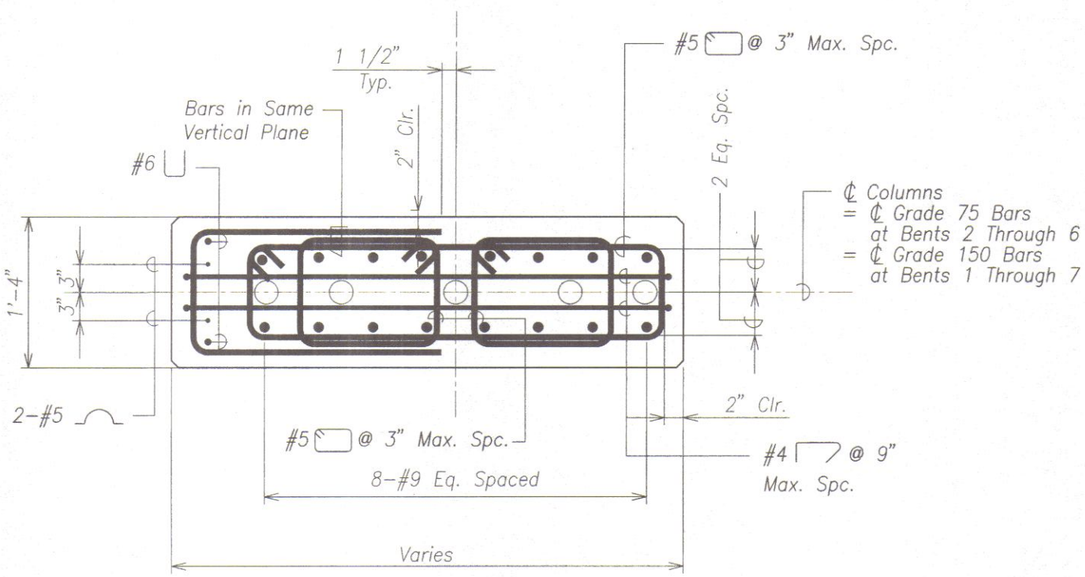

SECTION B
Scale: 1 1/2" = 1'-0" SB7B.1 SB7B.3

DRAWING NAME: Z:\00 ONGOING\40019.0-HONOAPIILANI LAHAINA BYPASS-KAHOMA WO\06-15-10 COMBINE LAHAINA FINAL DESIGN\HH-SB7B0B2.DWG PLOT TIME: 06-14-10, 3:22 PM

ORIGINAL PLAN	SURVEY PLOTTED BY	DATE
	DRAWN BY	
NOTE BOOK	TRACED BY	
	DESIGNED BY	
No.	QUANTITIES BY	
	CHECKED BY	

DAVID K. FUJIWARA LICENSED PROFESSIONAL ENGINEER NO. 8104-S HAWAII, U.S.A.

THIS WORK WAS PREPARED BY ME OR UNDER MY SUPERVISION.

KSF, INC. APRIL 30, 2012 LIC. EXP. DATE

STATE OF HAWAII
DEPARTMENT OF TRANSPORTATION
HIGHWAYS DIVISION

SECTIONS THROUGH COLUMNS

HONOAPIILANI HIGHWAY REALIGNMENT, PHASE 1A
Future Keawe St Extension to Lahainaluna Rd, Part B
Fed. Aid Proj. No. NH-030-1(35)R

Scale: As Noted Date: June, 2010

SHEET No. SB7B.3 OF 5 SHEETS

FINAL DESIGN 317

FED. ROAD DIST. NO.	STATE	FED. AID PROJ. NO.	FISCAL YEAR	SHEET NO.	TOTAL SHEETS
HAWAII	HAW.	NH-030-1(35)R	2009	318	383

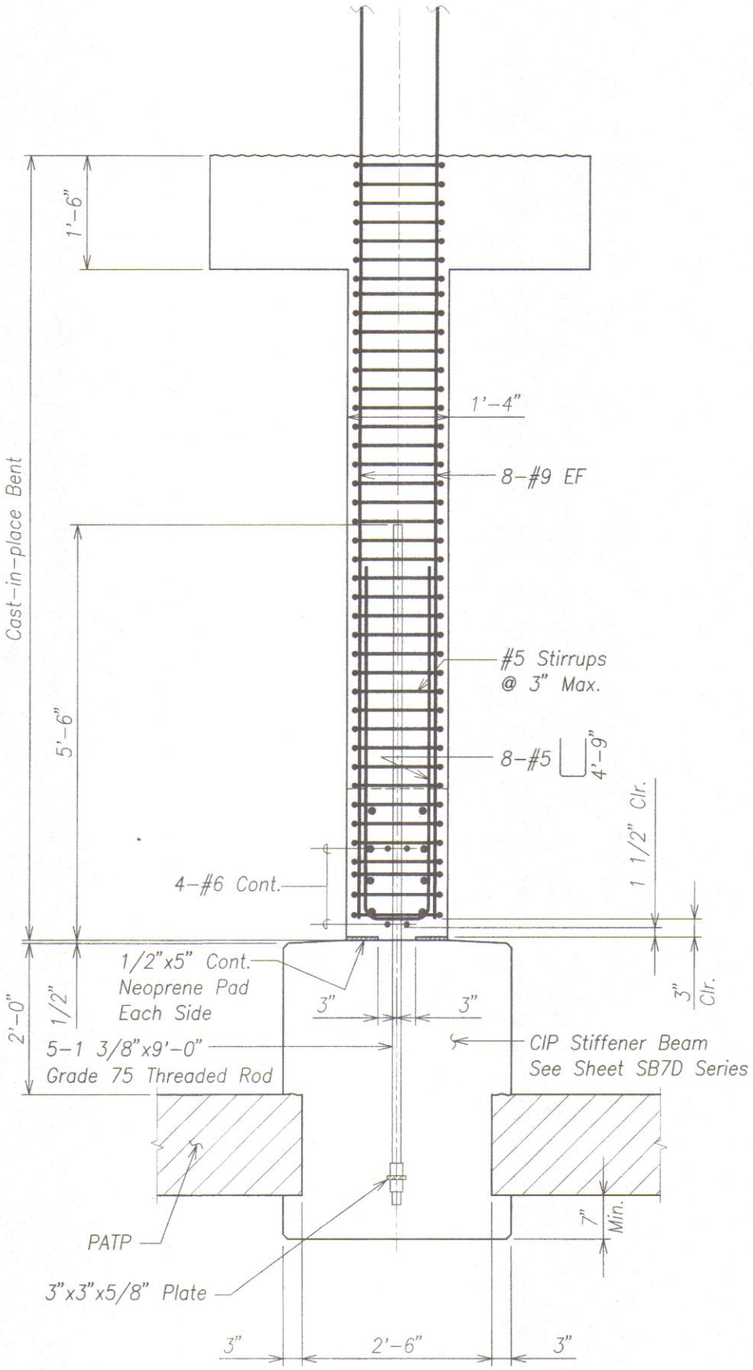

SECTION A
Scale: 1" = 1'-0" SB7A.1 SB7B.4 SB7B.1

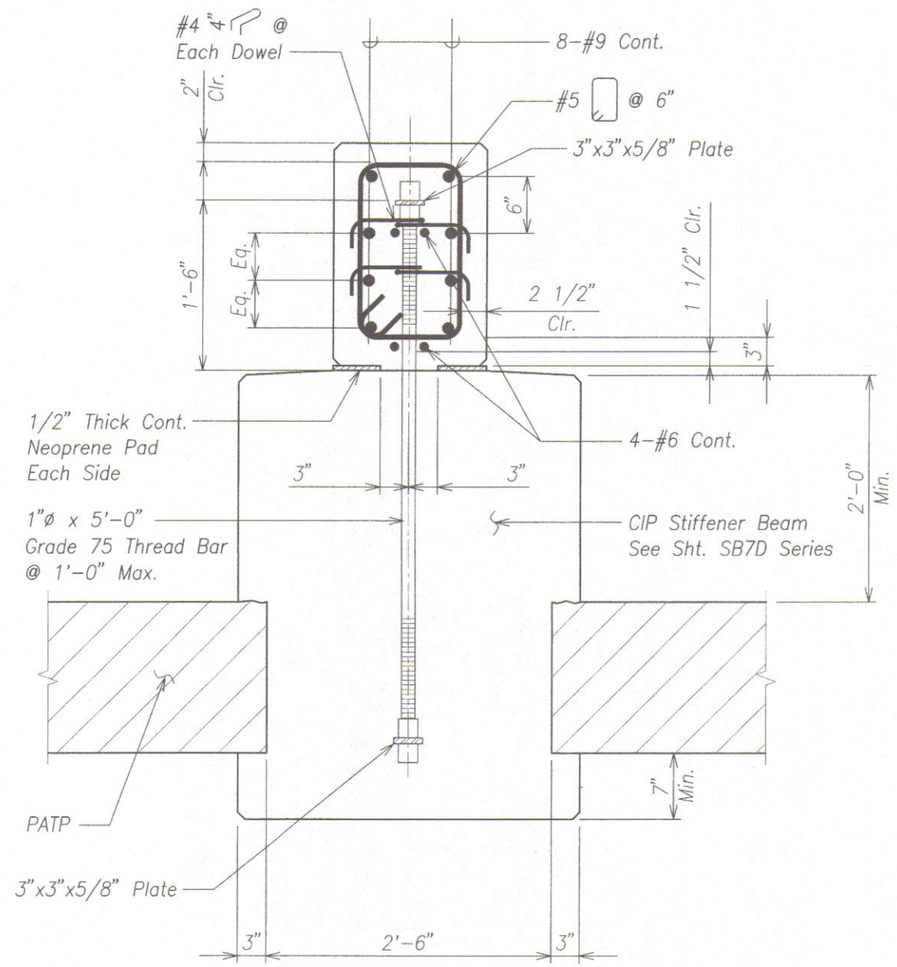

SECTION B
Scale: 1 1/2" = 1'-0" SB7B.1 SB7B.4

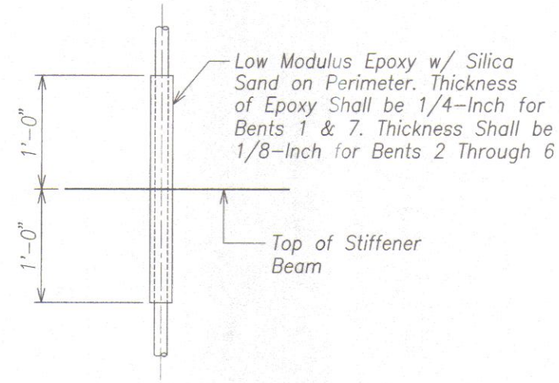

DETAIL 1
Scale: 1 1/2" = 1'-0" SB7B.1 SB7B.4

NOTE:

1. See Sheet SB7B.2 for Threaded Rod locations.

ORIGINAL PLAN	SURVEY PLOTTED BY	DATE
	DRAWN BY	
NOTE BOOK	TRACED BY	
	DESIGNED BY	
No.	QUANTITIES BY	
	CHECKED BY	

DRAWING NAME: Z:\00 ONGOING\40019.0-HONOAPIILANI LAHAINA BYPASS-KAHOMA WD\06-15-10 COMBINE LAHAINA FINAL DESIGN\NH-SB70B4.DWG PLOT TIME: 06-14-10, 3:23 PM

LICENSED PROFESSIONAL ENGINEER NO. 8104-S DAVID K. FUJIWARA HAWAII, U.S.A.

THIS WORK WAS PREPARED BY ME OR UNDER MY SUPERVISION.

KSF, INC. APRIL 30, 2012 LIC. EXP. DATE

STATE OF HAWAII
DEPARTMENT OF TRANSPORTATION
HIGHWAYS DIVISION

BENT SECTIONS AND DETAIL

HONOAPIILANI HIGHWAY REALIGNMENT, PHASE 1A
Future Keawe St Extension to Lahainaluna Rd, Part B
Fed. Aid Proj. No. NH-030-1(35)R

Scale: As Noted Date: June, 2010

SHEET No. SB7B.4 OF 5 SHEETS

FINAL DESIGN 318

FED. ROAD DIST. NO.	STATE	FED. AID PROJ. NO.	FISCAL YEAR	SHEET NO.	TOTAL SHEETS
HAWAII	HAW.	NH-030-1(35)R	2009	319	383

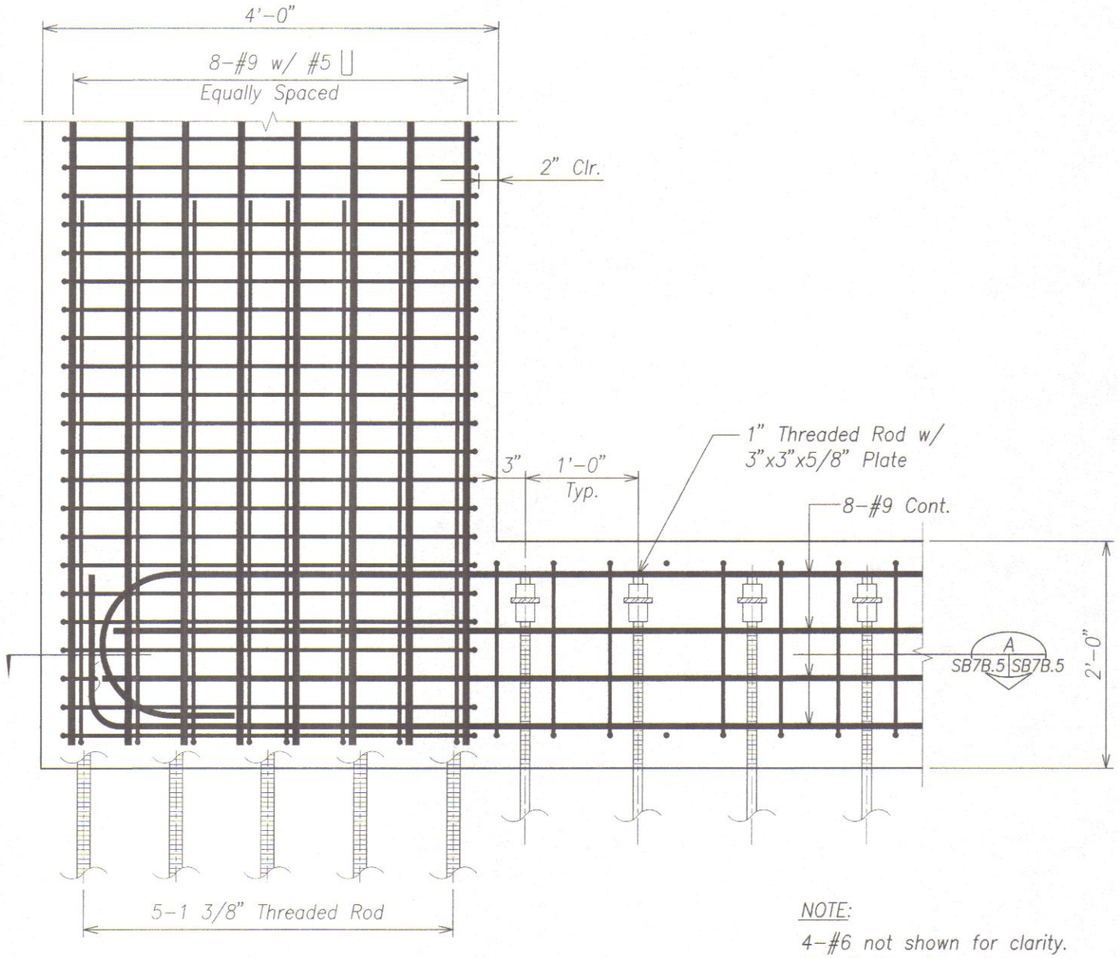

DETAIL 1 SB7B.1 SB7B.5
Scale: 1 1/2" = 1'-0"

NOTE:
4-#6 not shown for clarity.
See Section A on this sheet.

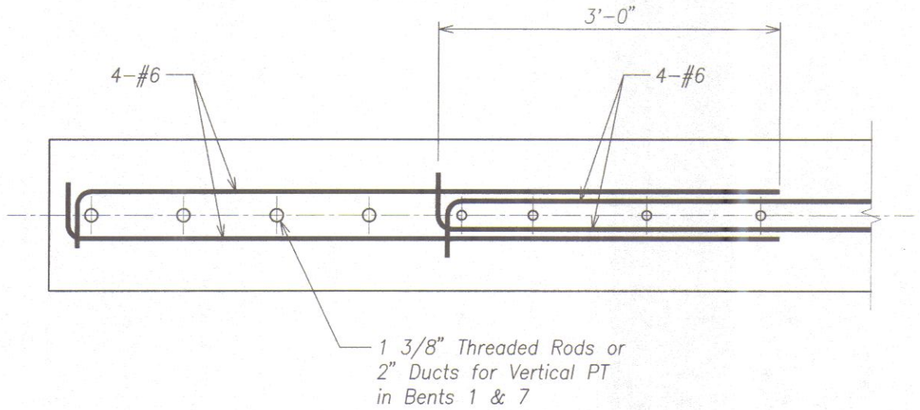

SECTION A SB7B.5 SB7B.5
Scale: 1 1/2" = 1'-0"

DRAWING NAME: Z:\00 ONGOING\40019.0-HONOAPIILANI LAHAINA BYPASS-KAHOMA WO\06-15-10 COMBINE LAHAINA FINAL DESIGN\HH-SB700B4.DWG PLOT TIME: 06-14-10, 3:23 PM

ORIGINAL PLAN	SURVEY PLOTTED BY	DATE
NOTE BOOK	DRAWN BY	
	TRACED BY	
	DESIGNED BY	
	QUANTITIES BY	
No.	CHECKED BY	

DAVID K. FUJIWARA
LICENSED PROFESSIONAL ENGINEER
NO. 8104-S
HAWAII, U.S.A.

THIS WORK WAS PREPARED BY ME OR UNDER MY SUPERVISION.

KSF, INC. APRIL 30, 2012 LIC. EXP. DATE

STATE OF HAWAII
DEPARTMENT OF TRANSPORTATION
HIGHWAYS DIVISION

BENT SECTION AND DETAIL

HONOAPIILANI HIGHWAY REALIGNMENT, PHASE 1A
Future Keawe St Extension to Lahainaluna Rd, Part B
Fed. Aid Proj. No. NH-030-1(35)R

Scale: As Noted Date: June, 2010

SHEET No. SB7B.5 OF 5 SHEETS

FINAL DESIGN 319

FED. ROAD DIST. NO.	STATE	FED. AID PROJ. NO.	FISCAL YEAR	SHEET NO.	TOTAL SHEETS
HAWAII	HAW.	NH-030-1(35)R	2009	320	383

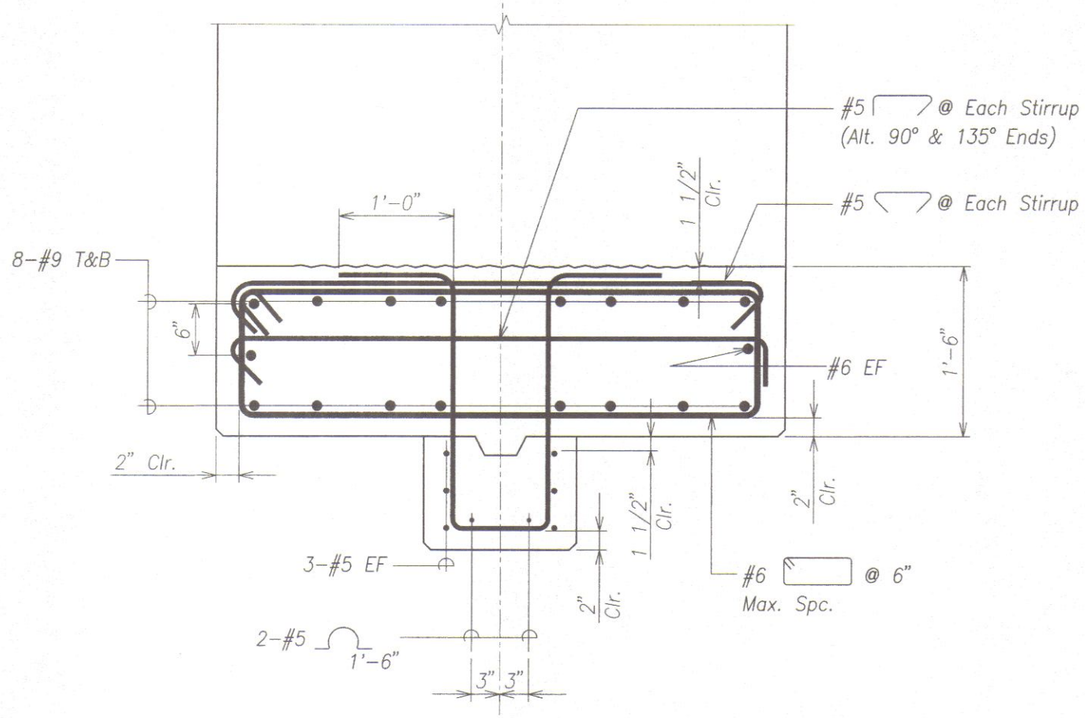

SECTION – BELOW GIRDER

Scale: 1 1/2" = 1'-0"

A SB7A.2 SB7C.1

SB7A.3, SB7A.4 SB7A.5, SB7A.6

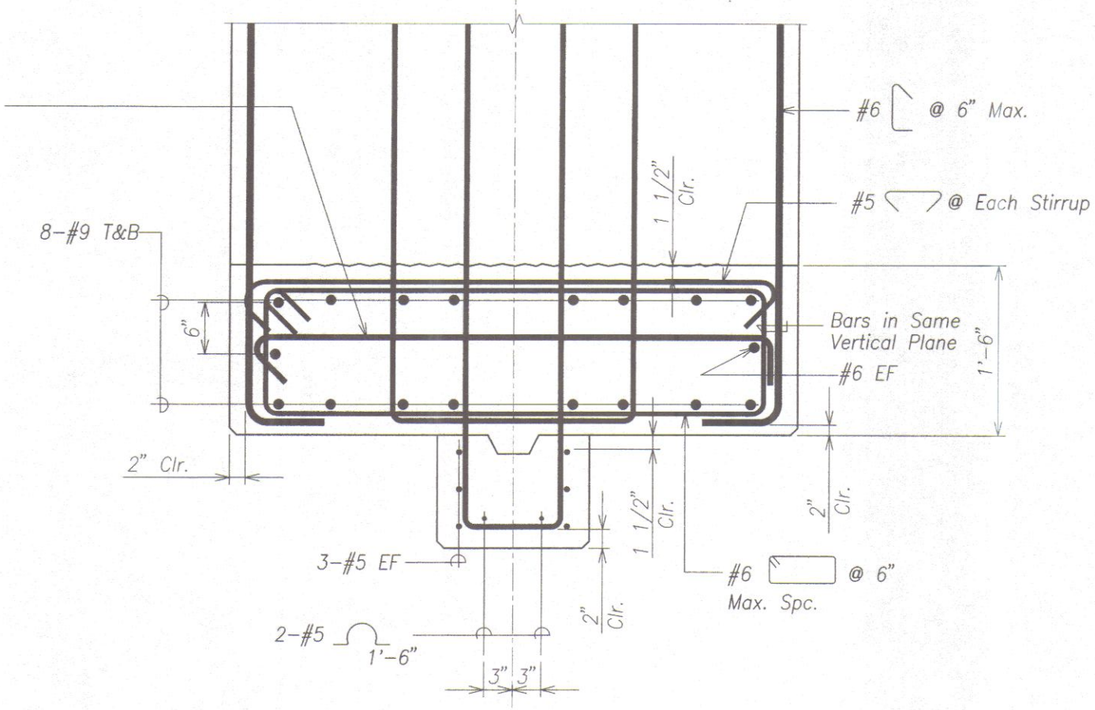

SECTION

Scale: 1 1/2" = 1'-0"

B SB7A.2 SB7C.1

SB7A.3, SB7A.4 SB7A.5, SB7A.6

DAVID K. FUJIWARA
LICENSED PROFESSIONAL ENGINEER
NO. 8104-S
HAWAII, U.S.A.

THIS WORK WAS PREPARED BY ME OR UNDER MY SUPERVISION.

KSF, INC. — APRIL 30, 2012 LIC. EXP. DATE

STATE OF HAWAII
DEPARTMENT OF TRANSPORTATION
HIGHWAYS DIVISION

BENT CAP

HONOAPIILANI HIGHWAY REALIGNMENT, PHASE 1A
Future Keawe St Extension to Lahainaluna Rd, Part B
Fed. Aid Proj. No. NH-030-1(35)R

Scale: As Noted — Date: June, 2010

SHEET No. SB7C.1 OF 1 SHEETS

ORIGINAL PLAN	SURVEY PLOTTED BY	DATE
	DRAWN BY	
	TRACED BY	
NOTE BOOK	DESIGNED BY	
	QUANTITIES BY	
No.	CHECKED BY	

DRAWING NAME: Z:\00 ONGOING\40019.0-HONOAPIILANI LAHAINA BYPASS-KAHOMA WO\06-15-10 COMBINE LAHAINA FINAL DESIGN\HH-SB700C1.DWG PLOT TIME: 06-14-10, 3:24 PM

FINAL DESIGN 320

FED. ROAD DIST. NO.	STATE	FED. AID PROJ. NO.	FISCAL YEAR	SHEET NO.	TOTAL SHEETS
HAWAII	HAW.	NH-030-1(35)R	2009	321	383

NOTE:

See A/SB7D.2 for Section at Bents 1 & 7.

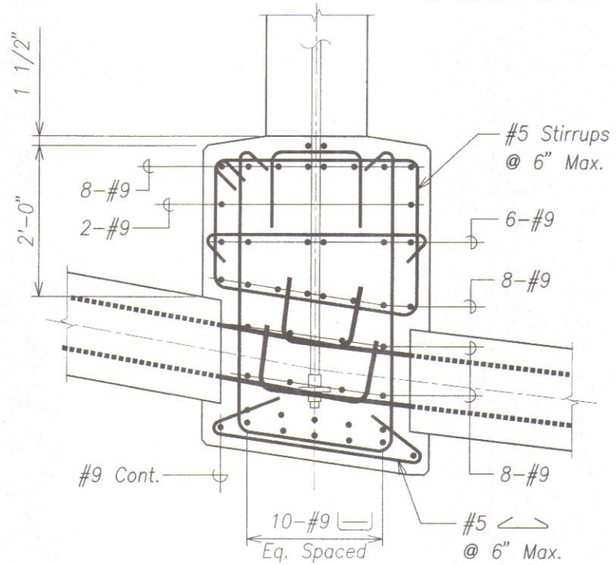

SECTION AT PATP (A) SB7D.1 | SB7D.1
Scale: 1" = 1'-0"

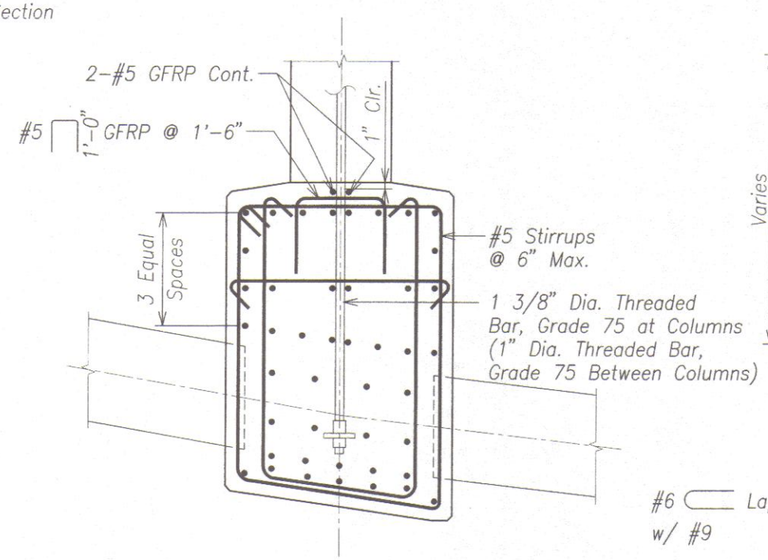

SECTION BETWEEN PATP (B) SB7D.1 | SB7D.1
Scale: 1" = 1'-0"

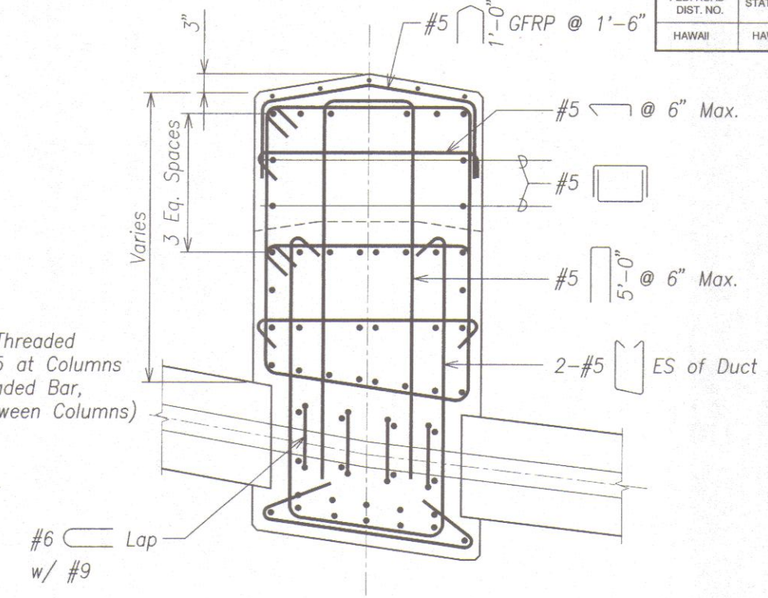

SECTION AT PATP (C) SB7D.1 | SB7D.1
Scale: 1" = 1'-0"

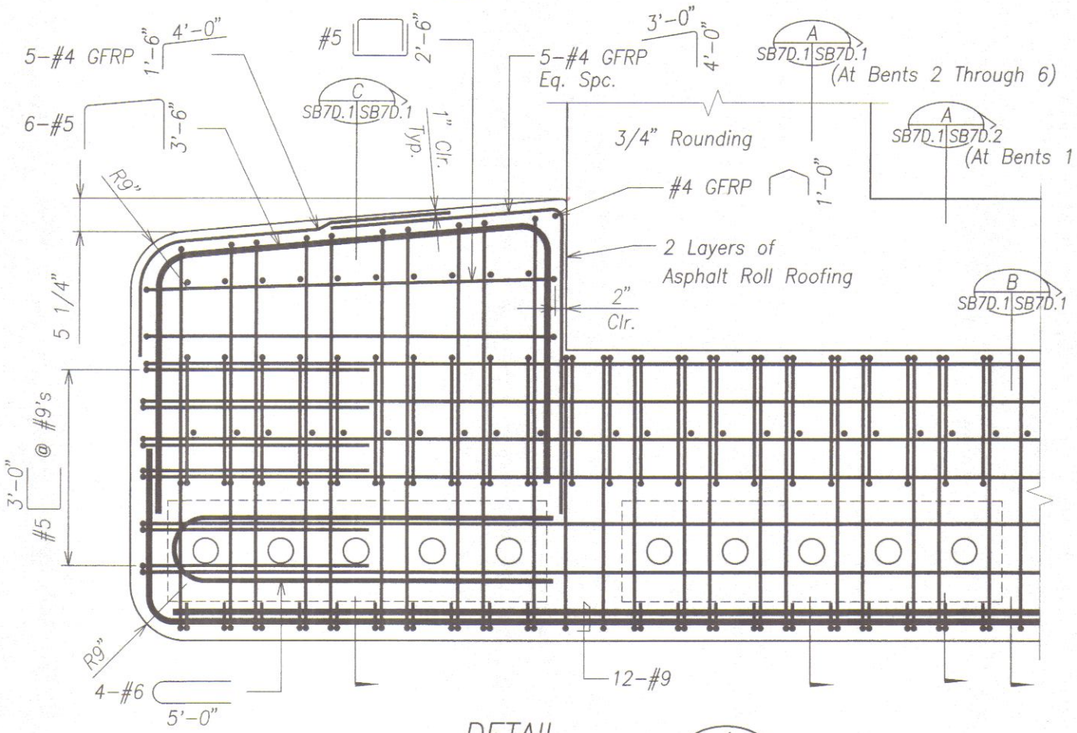

DETAIL (1) SB7A.1 | SB7D.1
Scale: 1" = 1'-0"

DAVID K. FUJIWARA LICENSED PROFESSIONAL ENGINEER NO. 8104-S HAWAII, U.S.A.

THIS WORK WAS PREPARED BY ME OR UNDER MY SUPERVISION.

KSF, INC. APRIL 30, 2013 LIC. EXP. DATE

STATE OF HAWAII
DEPARTMENT OF TRANSPORTATION
HIGHWAYS DIVISION

STIFFENER BEAM SECTIONS AND DETAIL

HONOAPIILANI HIGHWAY REALIGNMENT, PHASE 1A
Future Keawe St Extension to Lahainaluna Rd, Part B
Fed. Aid Proj. No. NH-030-1(35)R

Scale: As Noted Date: June, 2010

SHEET No. SB7D.1 OF 3 SHEETS

ORIGINAL PLAN	SURVEY PLOTTED BY	DATE
	DRAWN BY	
	TRACED BY	
NOTE BOOK	DESIGNED BY	
	QUANTITIES BY	
No.	CHECKED BY	

DRAWING NAME: Z:\00 ONGOING\40019.0-HONOAPIILANI LAHAINA BYPASS-KAHOMA WO\06-15-10 COMBINE LAHAINA FINAL DESIGN\HH-SB7D001.DWG PLOT TIME: 06-14-10, 3:24 PM

FINAL DESIGN 321

FED. ROAD DIST. NO.	STATE	FED. AID PROJ. NO.	FISCAL YEAR	SHEET NO.	TOTAL SHEETS
HAWAII	HAW.	NH-030-1(35)R	2009	322	383

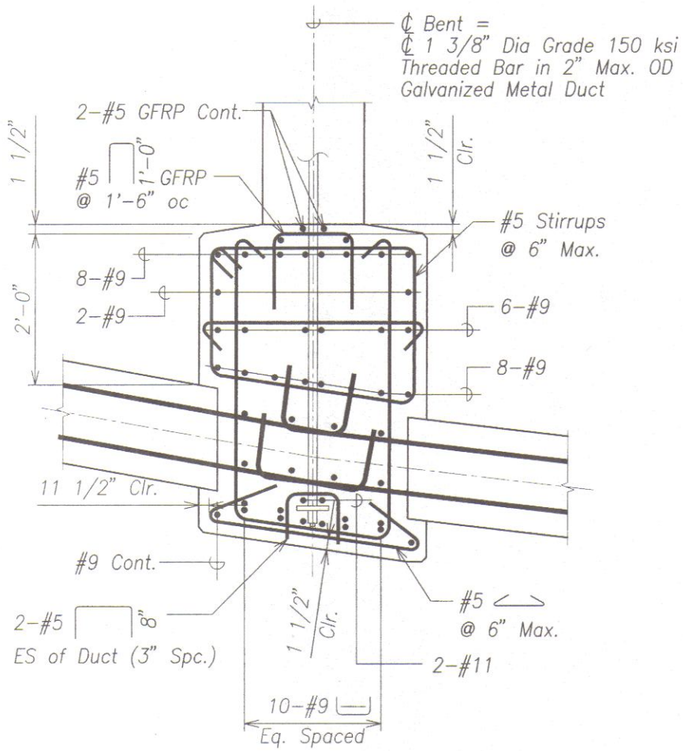

SECTION AT BENTS 1 & 7 (A / SB7A.1 | SB7D.2)

Scale: 1" = 1'-0"

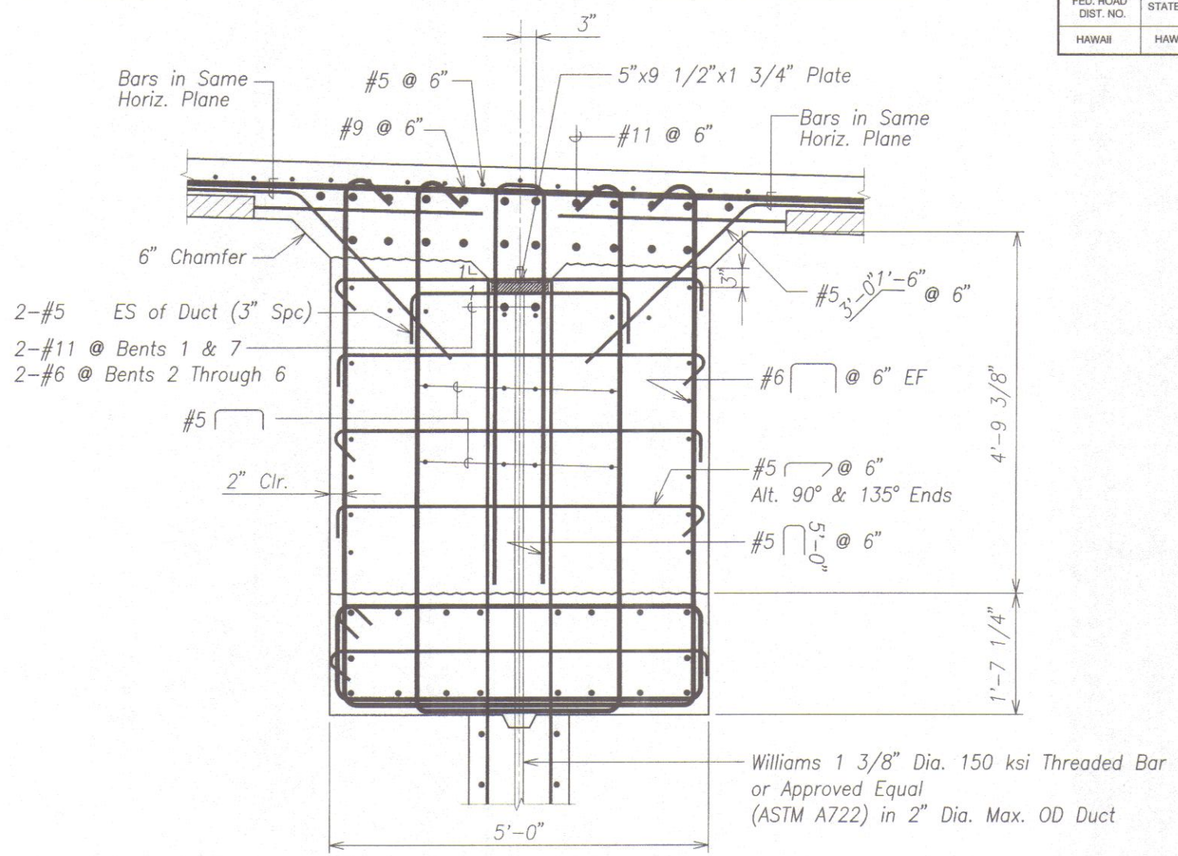

TYPICAL SECTION
BETWEEN GIRDERS (A / SB7A.1 | SB7D.2)

Scale: 1" = 1'-0"

SB3.4, SB3.10

DAVID K. FUJIWARA
LICENSED PROFESSIONAL ENGINEER
NO. 8104-S
HAWAII, U.S.A.

THIS WORK WAS PREPARED BY ME OR UNDER MY SUPERVISION.

KSF, INC. — APRIL 30, 2012 LIC. EXP. DATE

STATE OF HAWAII
DEPARTMENT OF TRANSPORTATION
HIGHWAYS DIVISION

STIFFENER BEAM SECTIONS

HONOAPIILANI HIGHWAY REALIGNMENT, PHASE 1A
Future Keawe St Extension to Lahainaluna Rd, Part B
Fed. Aid Proj. No. NH-030-1(35)R

Scale: As Noted — Date: June, 2010

SHEET No. SB7D.2 OF 3 SHEETS

ORIGINAL PLAN	SURVEY PLOTTED BY	DATE
	DRAWN BY	
NOTE BOOK	TRACED BY	
	DESIGNED BY	
	QUANTITIES BY	
No.	CHECKED BY	

DRAWING NAME: Z:\DO ONGOING\40019.0-HONOAPIILANI LAHAINA BYPASS-KAHOMA WO\06-15-10 COMBINE LAHAINA FINAL DESIGN\HH-SB70001.DWG PLOT TIME: 06-14-10, 3:25 PM)

FINAL DESIGN 322

FED. ROAD DIST. NO.	STATE	FED. AID PROJ. NO.	FISCAL YEAR	SHEET NO.	TOTAL SHEETS
HAWAII	HAW.	NH-030-1(35)R	2009	323	383

NOTES:

1. Stiffener Beam at Bent 2 shown.
2. For reinforcing, see Sht. SB7D.1, similar.
3. For PATP, See Sheet SB6 Series.

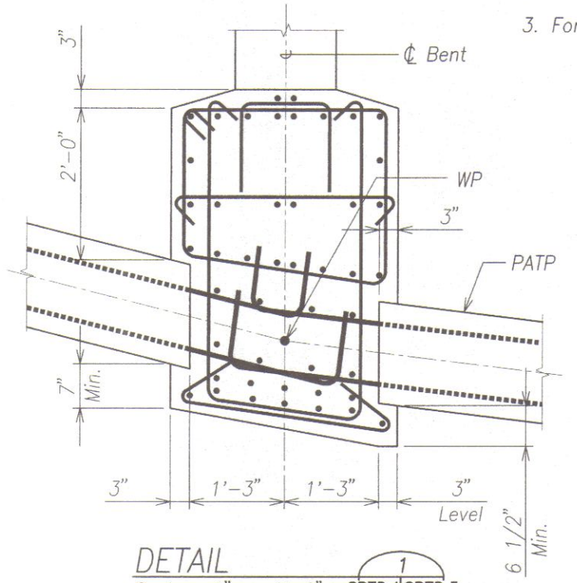

DETAIL 1 SB7D.1 SB7D.3

Scale: 1" = 1'-0"

BENT NO.	⊖
1	0
2	4°
3	4°
4	4°
5	4°
6	4°
7	0°

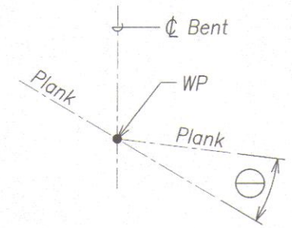

ANGLE CHANGE IN PATP AT STIFFENER BEAM

DAVID K. FUJIWARA LICENSED PROFESSIONAL ENGINEER NO. 8104-S HAWAII, U.S.A.

THIS WORK WAS PREPARED BY ME OR UNDER MY SUPERVISION.

KSF, INC. APRIL 30, 2012 LIC. EXP. DATE

STATE OF HAWAII
DEPARTMENT OF TRANSPORTATION
HIGHWAYS DIVISION

STIFFENER BEAM DETAIL

HONOAPIILANI HIGHWAY REALIGNMENT, PHASE 1A
Future Keawe St Extension to Lahainaluna Rd, Part B
Fed. Aid Proj. No. NH-030-1(35)R

Scale: As Noted Date: June, 2010

SHEET No. SB7D.3 OF 3 SHEETS

FINAL DESIGN 323

ORIGINAL PLAN	SURVEY PLOTTED BY	DATE
	DRAWN BY	"
NOTE BOOK	TRACED BY	"
	DESIGNED BY	"
No.	QUANTITIES BY	"
	CHECKED BY	"

DRAWING NAME: Z:\00 ONGOING\40019.0-HONOAPIILANI LAHAINA BYPASS-KAHOMA WO\06-15-10 COMBINE LAHAINA FINAL DESIGN\HH-SB7D001.DWG PLOT TIME: 06-14-10, 3:28 PM)

FED. ROAD DIST. NO.	STATE	FED. AID PROJ. NO.	FISCAL YEAR	SHEET NO.	TOTAL SHEETS
HAWAII	HAW.	NH-030-1(35)R	2009	324	383

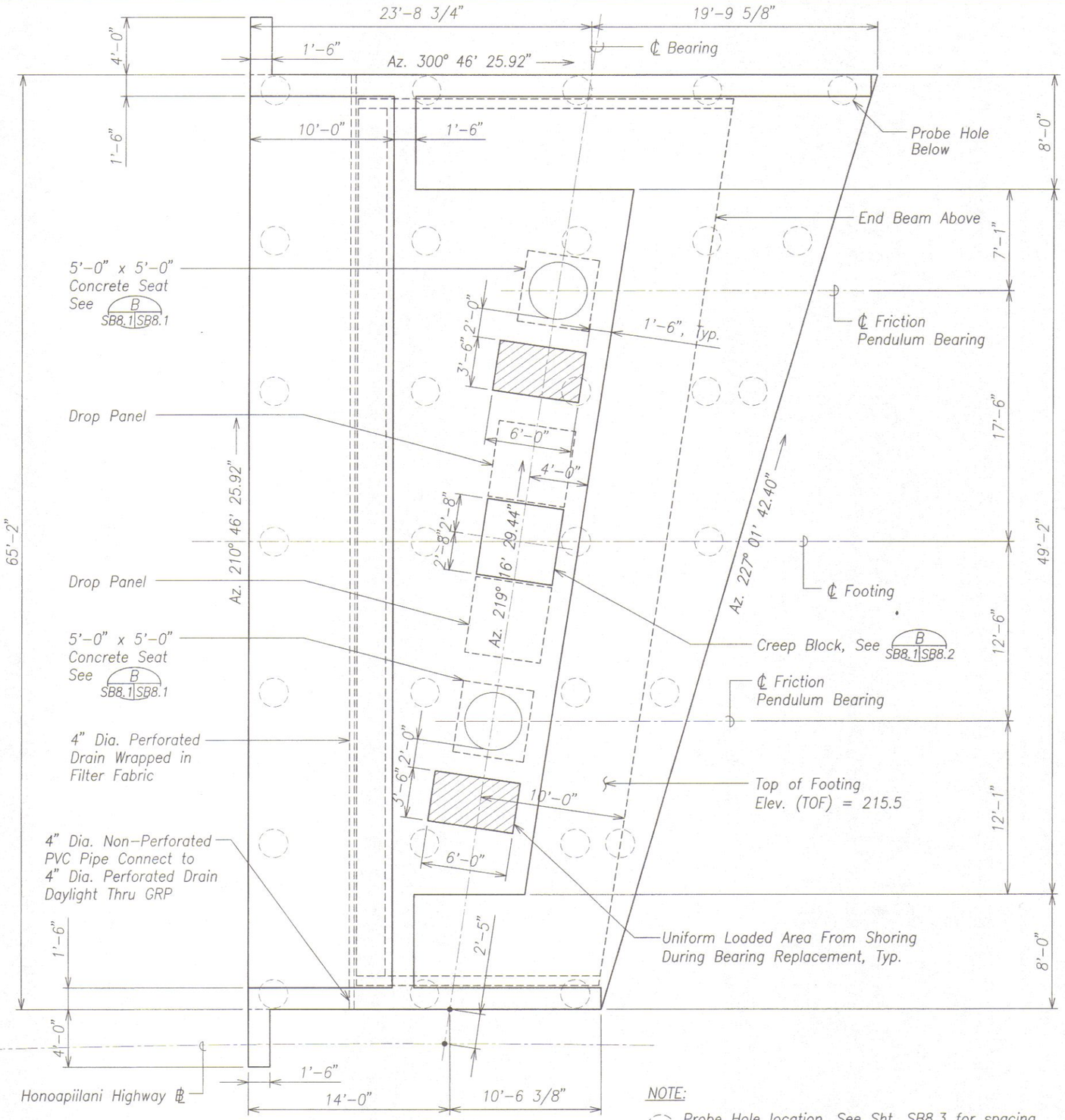

PLAN – ABUTMENT 1 (A SB8.1 SB8.1)

Scale: 1/4" = 1'-0"

NOTE:

Probe Hole location, See Sht. SB8.3 for spacing. See Special Provision Section 660.

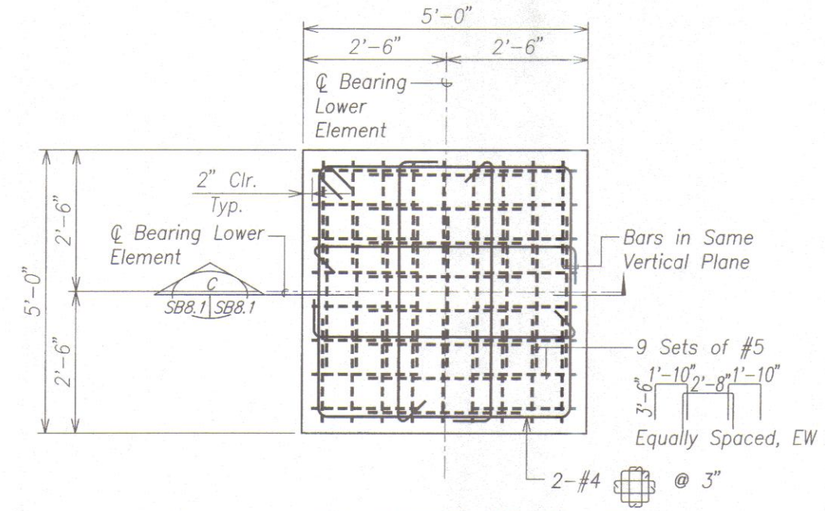

PLAN – CONCRETE SEAT (B SB8.1 SB8.1)

SCALE: 3/4" = 1'-0"

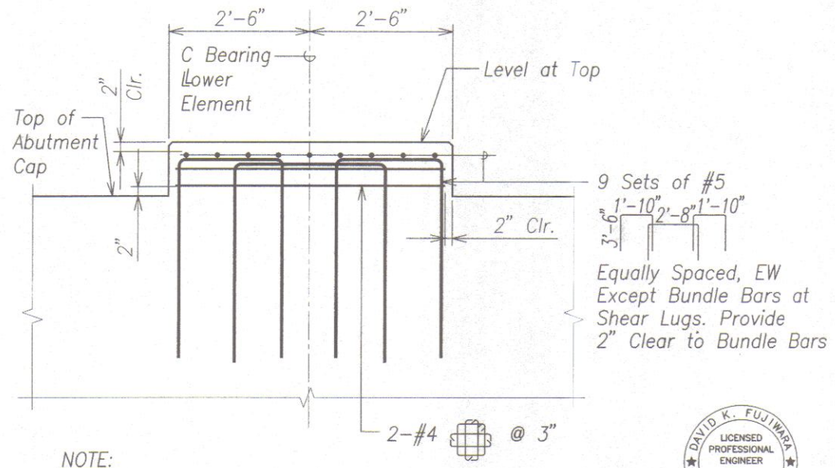

NOTE:

See Sheet SB14.1 for reinforcing at shear lug holes.

SECTION – CONCRETE SEAT (C SB8.1 SB8.1)

SCALE: 1" = 1'-0"

DAVID K. FUJIWARA LICENSED PROFESSIONAL ENGINEER NO. 8104-S HAWAII, U.S.A.

THIS WORK WAS PREPARED BY ME OR UNDER MY SUPERVISION.

KSF, INC. APRIL 30, 2012 LIC. EXP. DATE

STATE OF HAWAII
DEPARTMENT OF TRANSPORTATION
HIGHWAYS DIVISION

ABUTMENT 1
PLAN AND SECTIONS

HONOAPIILANI HIGHWAY REALIGNMENT, PHASE 1A
Future Keawe St Extension to Lahainaluna Rd, Part B
Fed. Aid Proj. No. NH-030-1(35)R

Scale: As Noted Date: June, 2010

SHEET No. SB8.1 OF 6 SHEETS

ORIGINAL PLAN | NOTE BOOK No. | SURVEY PLOTTED BY | DRAWN BY | TRACED BY | DESIGNED BY | QUANTITIES BY | CHECKED BY | DATE

DRAWING NAME: Z:\00 ONGOING\40019.0-HONOAPIILANI LAHAINA BYPASS-KAHOMA WO\06-15-10 COMBINE LAHAINA FINAL DESIGN\HH-SB801.DWG PLOT TIME: 06-14-10, 8:04 PM

FINAL DESIGN 324

FED. ROAD DIST. NO.	STATE	FED. AID PROJ. NO.	FISCAL YEAR	SHEET NO.	TOTAL SHEETS
HAWAII	HAW.	NH-030-1(35)R	2009	325	383

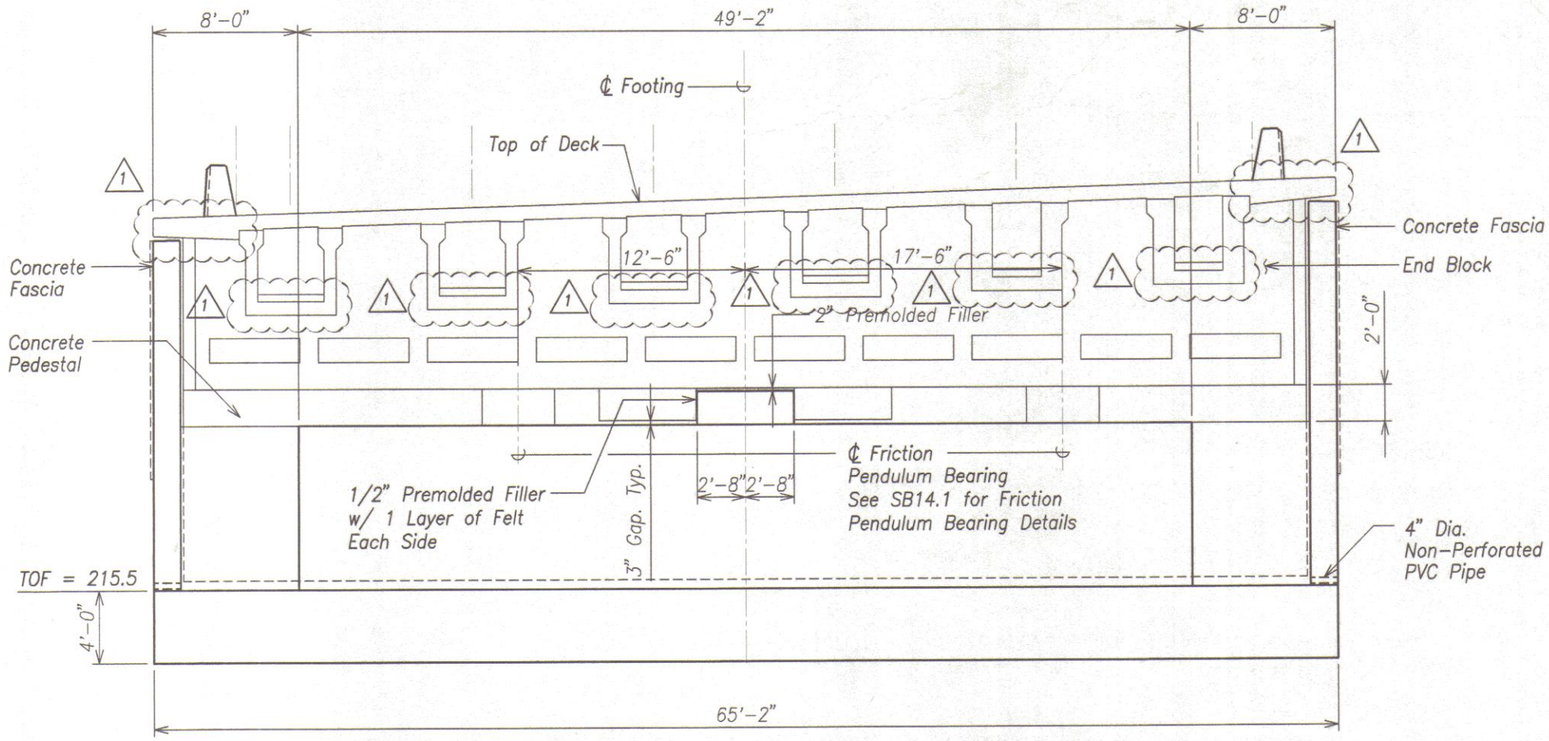

ELEVATION – ABUTMENT 1 (A / SB8.2 | SB8.2)

Scale: 1/4" = 1'-0"

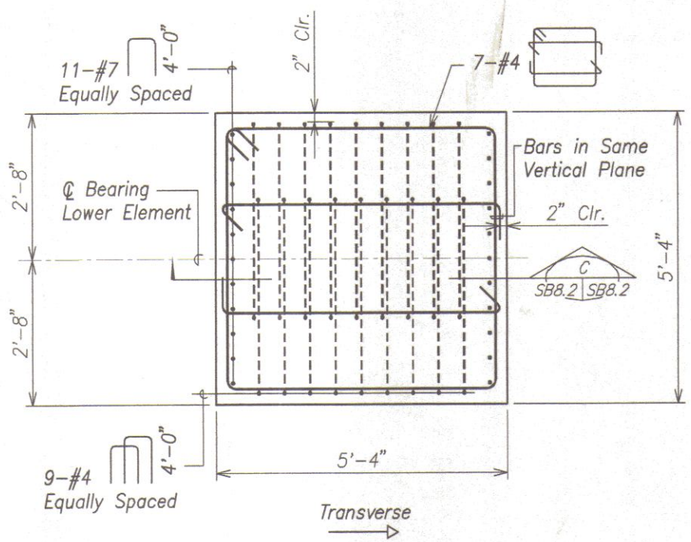

PLAN – CREEP BLOCK (B / SB8.1 | SB8.2)

SCALE: 3/4" = 1'-0"

SB9.1

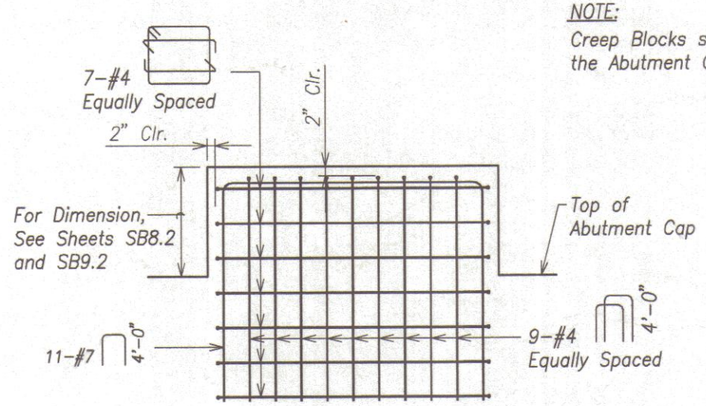

SECTION – CREEP BLOCK (C / SB8.2 | SB8.2)

SCALE: 3/4" = 1'-0"

NOTE:
Creep Blocks shall be poured monolithic with the Abutment Cap.

DATE	REVISION
2/01/11	1 Revisions

DAVID K. FUJIMARA LICENSED PROFESSIONAL ENGINEER NO. 8104-S HAWAII, U.S.A.

THIS WORK WAS PREPARED BY ME OR UNDER MY SUPERVISION.

KSF, INC. — APRIL 30, 2012 LIC. EXP. DATE

STATE OF HAWAII
DEPARTMENT OF TRANSPORTATION
HIGHWAYS DIVISION

ABUTMENT 1 ELEVATION AND CREEP BLOCK PLAN AND SECTION

HONOAPIILANI HIGHWAY REALIGNMENT, PHASE 1A
Future Keawe St Extension to Lahainaluna Rd, Part B
Fed. Aid Proj. No. NH-030-1(35)R

Scale: As Noted — Date: June, 2010

SHEET No. SB8.2 OF 6 SHEETS

FINAL DESIGN 325

ORIGINAL PLAN | SURVEY PLOTTED BY | DRAWN BY | TRACED BY | DESIGNED BY | QUANTITIES BY | CHECKED BY | NOTE BOOK No. | DATE

DRAWING NAME: Z:\00 ONGOING\40019.0-HONOAPIILANI LAHAINA BYPASS-KAHOMA WO\03-30-11 EM END BLOCKS\HH-SB801.DWG PLOT TIME: 03-31-11, 12:05 PM)

FED. ROAD DIST. NO.	STATE	FED. AID PROJ. NO.	FISCAL YEAR	SHEET NO.	TOTAL SHEETS
HAWAII	HAW.	NH-030-1(35)R	2009	325	383

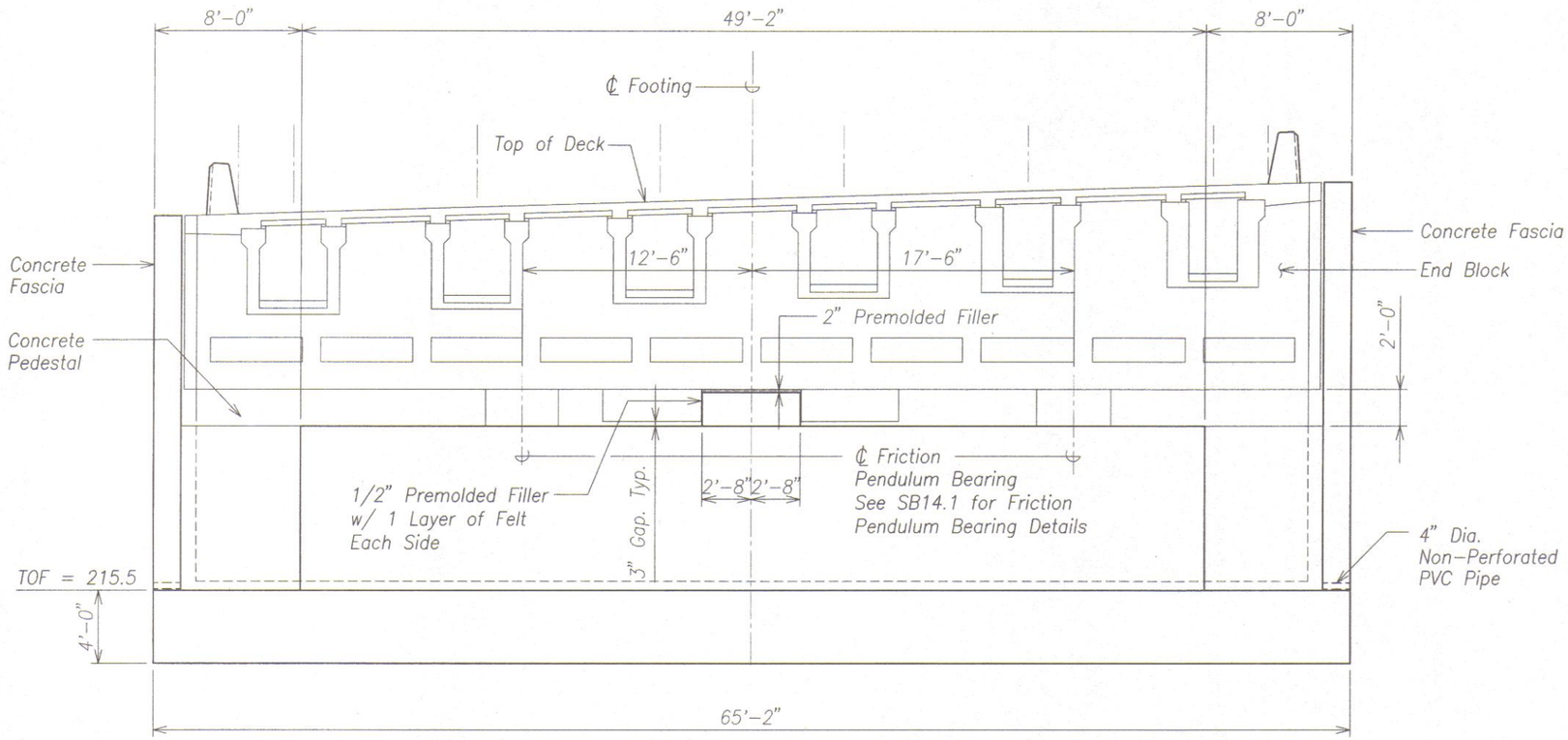

ELEVATION – ABUTMENT 1 (A SB8.2 SB8.2)

Scale: 1/4" = 1'-0"

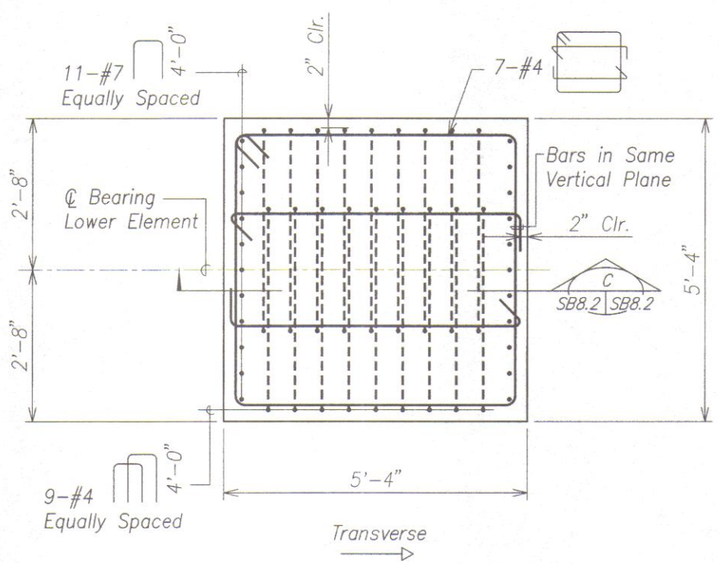

PLAN – CREEP BLOCK (B SB8.1 SB8.2)

SCALE: 3/4" = 1'-0"

SB9.1

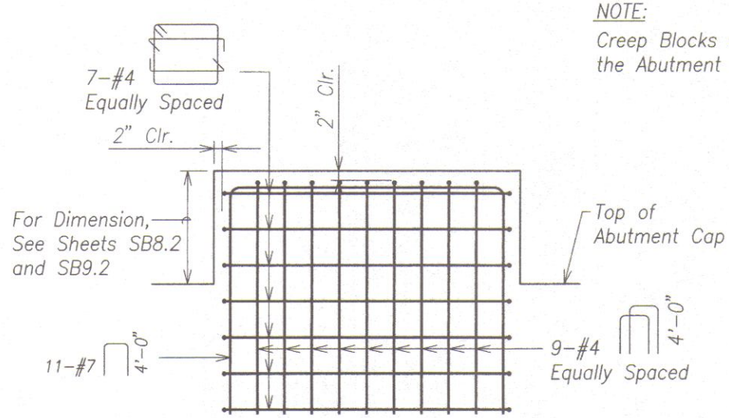

SECTION – CREEP BLOCK (C SB8.2 SB8.2)

SCALE: 3/4" = 1'-0"

NOTE:

Creep Blocks shall be poured monolithic with the Abutment Cap.

DAVID K. FUJIWARA LICENSED PROFESSIONAL ENGINEER NO. 8104-S HAWAII, U.S.A.

THIS WORK WAS PREPARED BY ME OR UNDER MY SUPERVISION.

KSF, INC. APRIL 30, 2012 LIC. EXP. DATE

STATE OF HAWAII
DEPARTMENT OF TRANSPORTATION
HIGHWAYS DIVISION

ABUTMENT 1 ELEVATION AND CREEP BLOCK PLAN AND SECTION

HONOAPIILANI HIGHWAY REALIGNMENT, PHASE 1A
Future Keawe St Extension to Lahainaluna Rd, Part B
Fed. Aid Proj. No. NH-030-1(35)R

Scale: As Noted Date: June, 2010

SHEET No. SB8.2 OF 6 SHEETS

ORIGINAL PLAN | SURVEY PLOTTED BY | DRAWN BY | TRACED BY | DESIGNED BY | QUANTITIES BY | CHECKED BY | DATE
NOTE BOOK No.

DRAWING NAME: Z:\DD ONGOING\40019.0-HONOAPIILANI LAHAINA BYPASS-KAHOMA WO\06-15-10 COMBINE LAHAINA FINAL DESIGN\HH-SB801.DWG PLOT TIME: 06-14-10, 8:04 PM

FINAL DESIGN ~~325~~ 384

FED. ROAD DIST. NO.	STATE	FED. AID PROJ. NO.	FISCAL YEAR	SHEET NO.	TOTAL SHEETS
HAWAII	HAW.	NH-030-1(35)R	2009	326	383

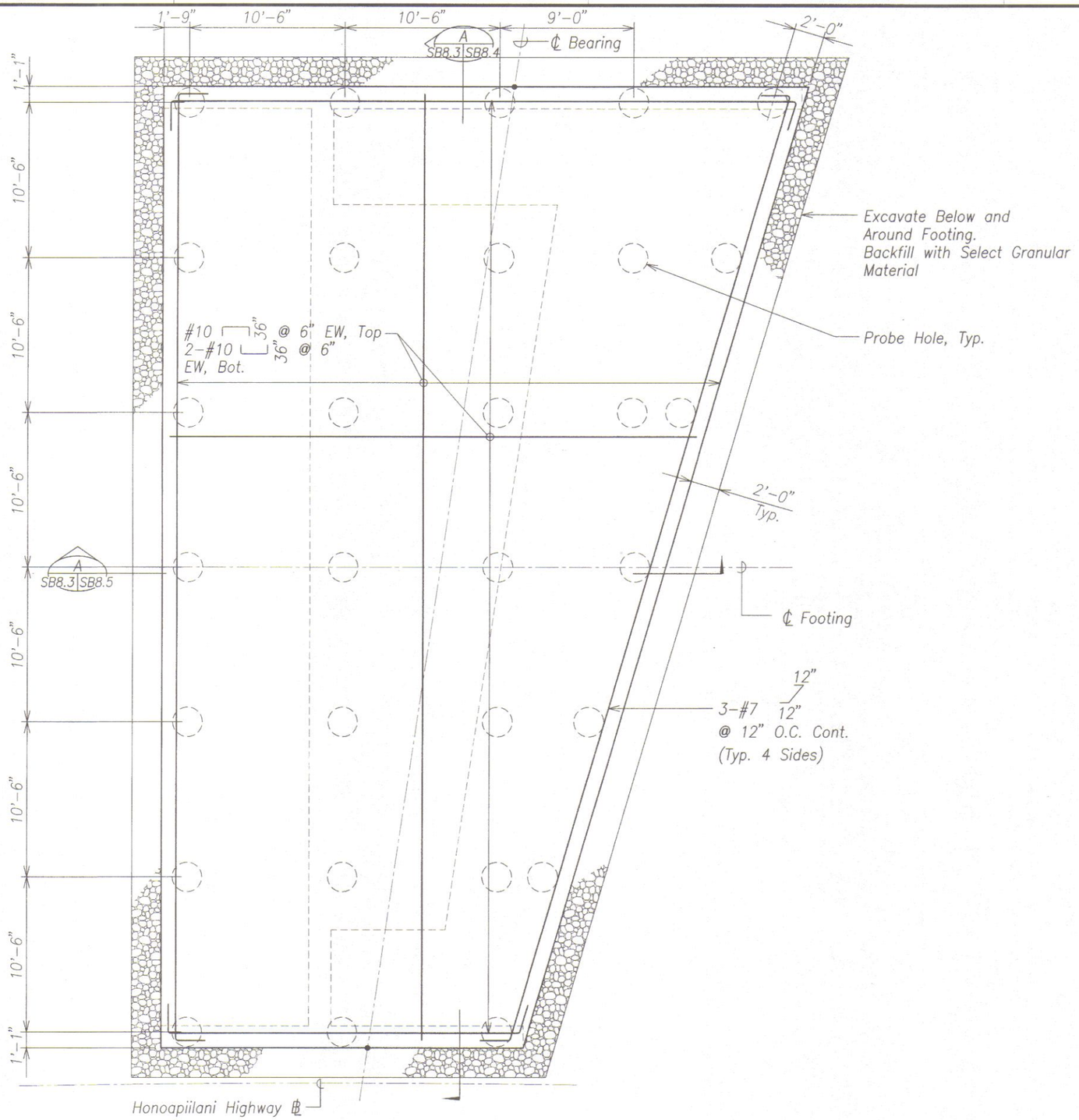

FOOTING REINFORCING PLAN – ABUTMENT 1 (A / SB8.3 SB8.3)

Scale: 1/4" = 1'-0"

NOTE:

Ties shall have a 135° hook on one end and a 90° hook on the opposite end. Ties shall be placed so that 90° and 135° of adjacent ties, horizontally and vertically, shall be alternated.

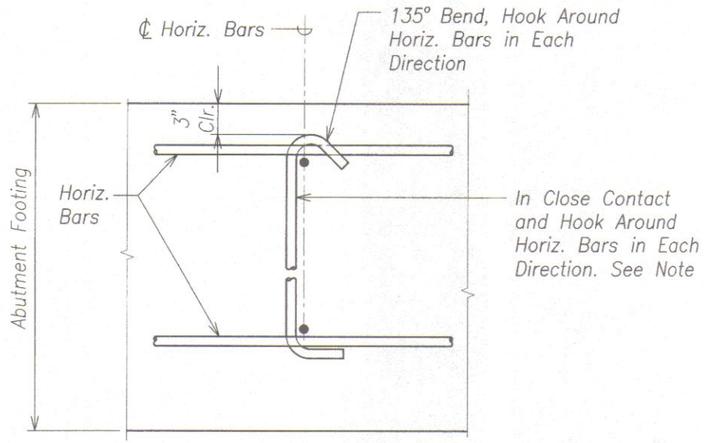

TIE BAR DETAIL (1 / SB8.4 SB8.3)

Scale: 1 1/2" = 1'-0"

SB8.5, SB9.4, SB9.5,

DAVID K. FUJIWARA LICENSED PROFESSIONAL ENGINEER NO. 8104-S HAWAII, U.S.A.

THIS WORK WAS PREPARED BY ME OR UNDER MY SUPERVISION.

KSF, INC. — APRIL 30, 2012 LIC. EXP. DATE

STATE OF HAWAII
DEPARTMENT OF TRANSPORTATION
HIGHWAYS DIVISION

ABUTMENT 1

FOOTING REINFORCING PLAN AND DETAIL

HONOAPIILANI HIGHWAY REALIGNMENT, PHASE 1A

Future Keawe St Extension to Lahainaluna Rd, Part B

Fed. Aid Proj. No. NH-030-1(35)R

Scale: As Noted — Date: June, 2010

SHEET No. SB8.3 OF 6 SHEETS

ORIGINAL PLAN — SURVEY PLOTTED BY / DRAWN BY / NOTE BOOK / No. / TRACED BY / DESIGNED BY / QUANTITIES BY / CHECKED BY / DATE

DRAWING NAME: Z:\00 ONGOING\40019.0-HONOAPIILANI LAHAINA BYPASS-KAHOMA WO\06-15-10 COMBINE LAHAINA FINAL DESIGN\HH-SB801.DWG PLOT TIME: 06-14-10, 8:04 PM

FINAL DESIGN 326

FED. ROAD DIST. NO.	STATE	FED. AID PROJ. NO.	FISCAL YEAR	SHEET NO.	TOTAL SHEETS
HAWAII	HAW.	NH-030-1(35)R	2009	327	383

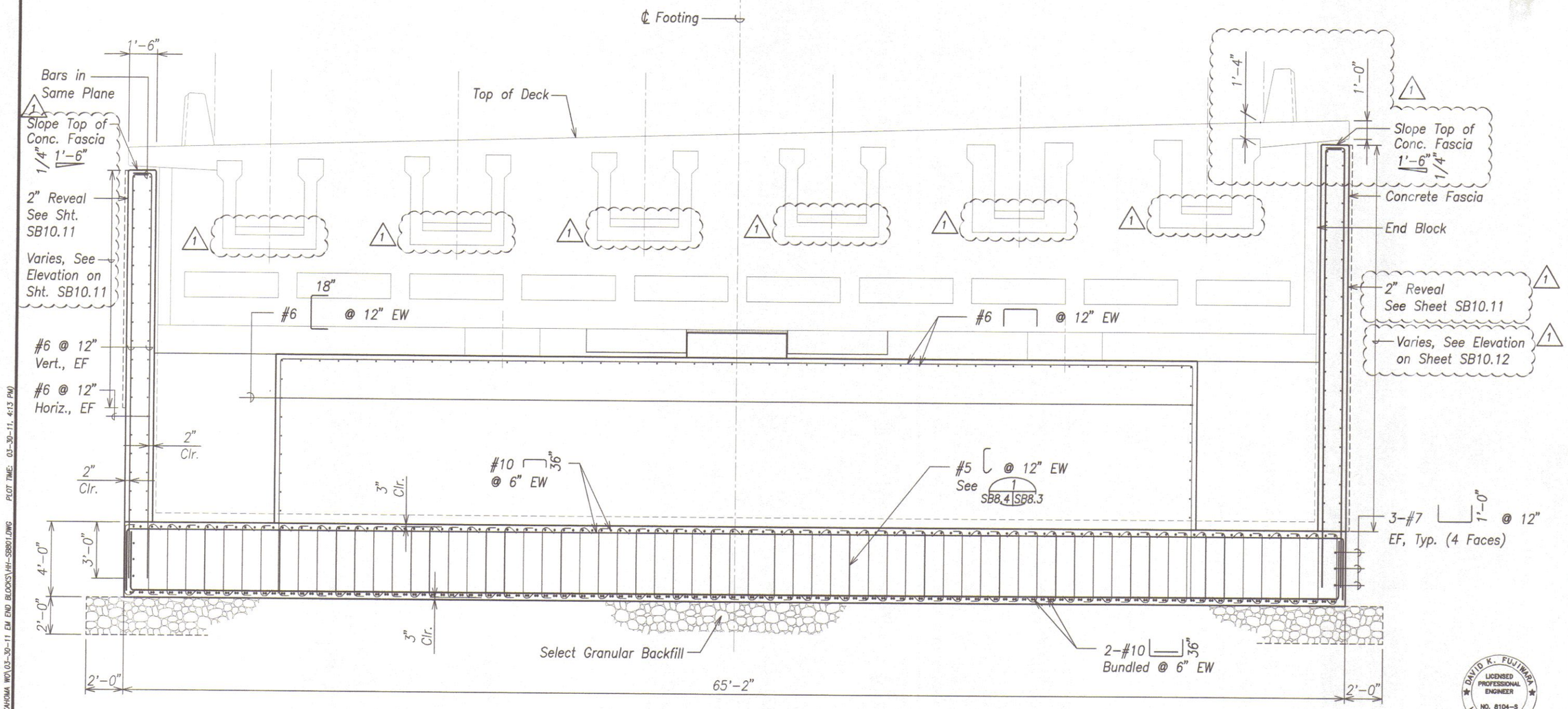

ELEVATION – ABUTMENT 1 (A SB8.3 SB8.4)

Scale: 3/8" = 1'-0"

DAVID K. FUJIWARA LICENSED PROFESSIONAL ENGINEER NO. 8104-S HAWAII, U.S.A.

THIS WORK WAS PREPARED BY ME OR UNDER MY SUPERVISION.

KSF, INC. — APRIL 30, 2012 LIC. EXP. DATE

DATE	REVISION
2/01/11	1 Revisions

STATE OF HAWAII
DEPARTMENT OF TRANSPORTATION
HIGHWAYS DIVISION

ABUTMENT 1 ELEVATION

HONOAPIILANI HIGHWAY REALIGNMENT, PHASE 1A
Future Keawe St Extension to Lahainaluna Rd, Part B
Fed. Aid Proj. No. NH-030-1(35)R

Scale: As Noted — Date: June, 2010

SHEET No. SB8.4 OF 6 SHEETS

FINAL DESIGN 327

ORIGINAL PLAN — NOTE BOOK No. — SURVEY PLOTTED BY — DRAWN BY — TRACED BY — DESIGNED BY — QUANTITIES BY — CHECKED BY — DATE

DRAWING NAME: Z:\00 ONGOING\40019.0-HONOAPIILANI LAHAINA BYPASS-KAHOMA WO\03-30-11 EM END BLOCKS\HH-SB801.DWG PLOT TIME: 03-30-11, 4:13 PM

FED. ROAD DIST. NO.	STATE	FED. AID PROJ. NO.	FISCAL YEAR	SHEET NO.	TOTAL SHEETS
HAWAII	HAW.	NH-030-1(35)R	2009	327	383

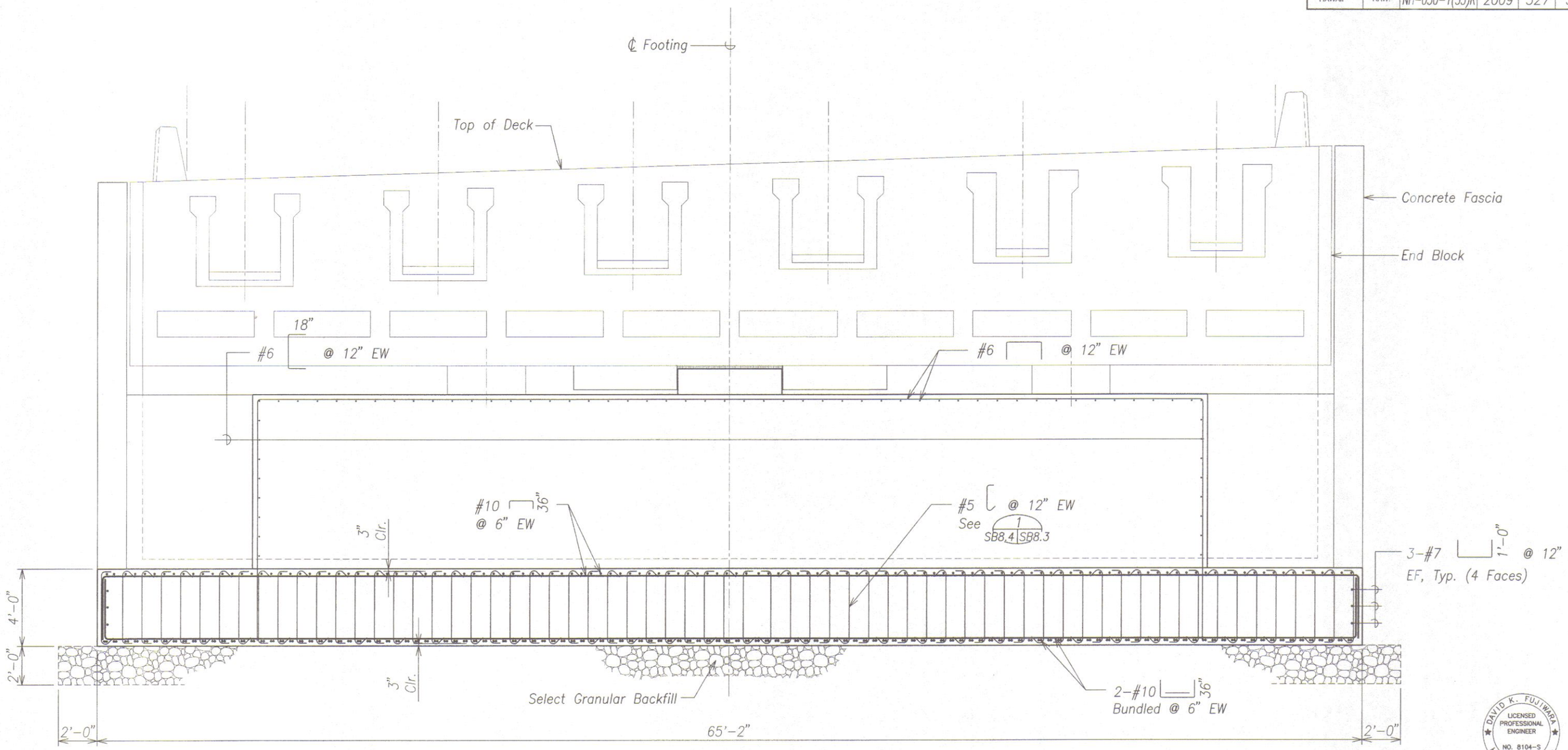

ELEVATION – ABUTMENT 1 (A SB8.3 SB8.4)

Scale: 3/8" = 1'-0"

DAVID K. FUJIWARA LICENSED PROFESSIONAL ENGINEER NO. 8104-S HAWAII, U.S.A.

THIS WORK WAS PREPARED BY ME OR UNDER MY SUPERVISION.

KSF, INC. — APRIL 30, 2012 LIC. EXP. DATE

STATE OF HAWAII
DEPARTMENT OF TRANSPORTATION
HIGHWAYS DIVISION

ABUTMENT 1 ELEVATION

HONOAPIILANI HIGHWAY REALIGNMENT, PHASE 1A
Future Keawe St Extension to Lahainaluna Rd, Part B
Fed. Aid Proj. No. NH-030-1(35)R

Scale: As Noted — Date: June, 2010

SHEET No. SB8.4 OF 6 SHEETS

FINAL DESIGN 327 RW

ORIGINAL PLAN | NOTE BOOK No. | SURVEY PLOTTED BY | DRAWN BY | TRACED BY | DESIGNED BY | QUANTITIES BY | CHECKED BY | DATE

DRAWING NAME: Z:\00 ONGOING\40019.0-HONOAPIILANI LAHAINA BYPASS-KAHOMA WO\06-15-10 COMBINE LAHAINA FINAL DESIGN\HH-SBB01.DWG PLOT TIME: 06-14-10, 8:05 PM

FED. ROAD DIST. NO.	STATE	FED. AID PROJ. NO.	FISCAL YEAR	SHEET NO.	TOTAL SHEETS
HAWAII	HAW.	NH-030-1(35)R	2009	328	383

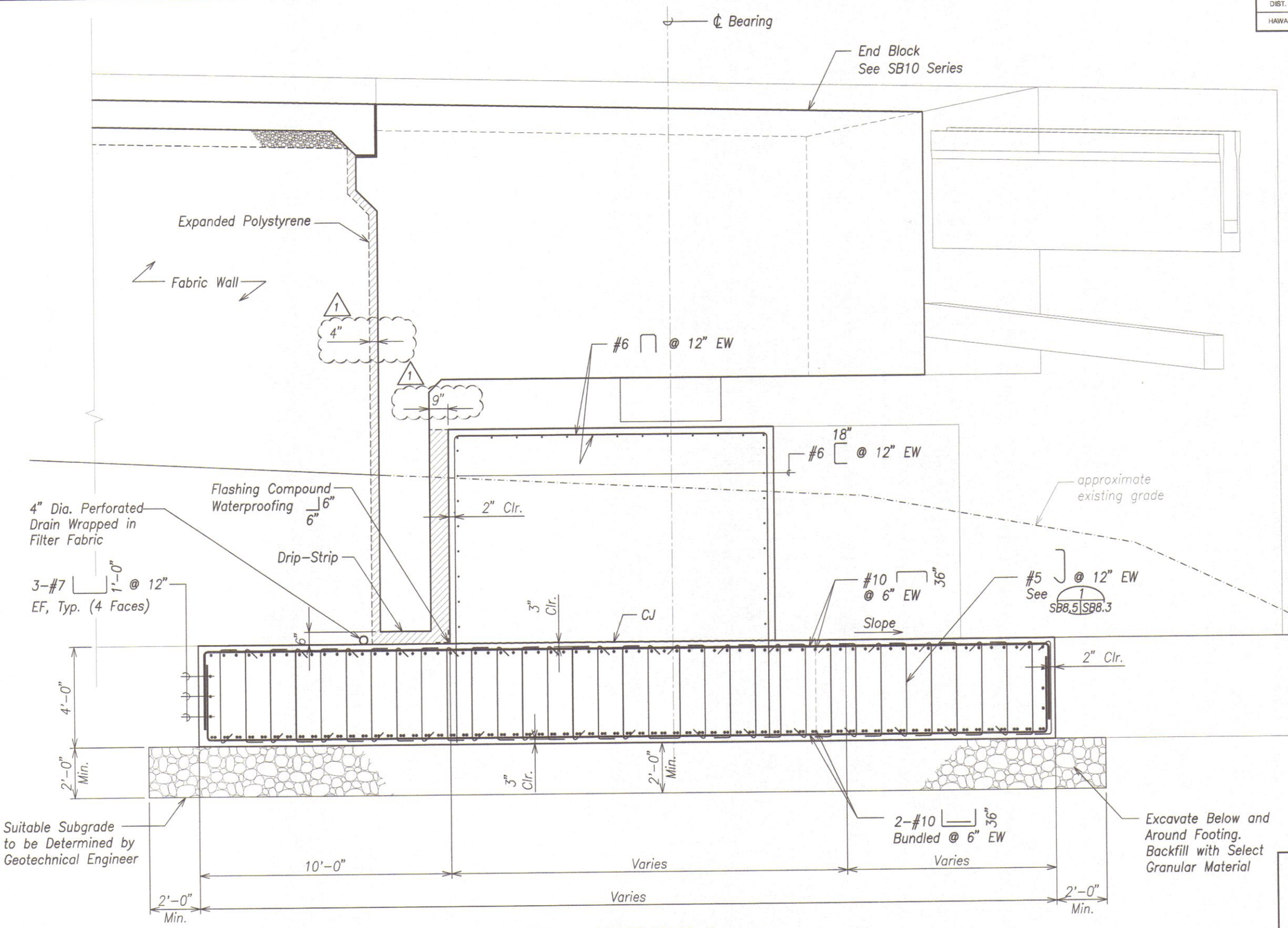

SECTION – ABUTMENT 1 (A SB8.3 SB8.5)

Scale: 1/2" = 1'-0"

DAVID K. FUJIWARA LICENSED PROFESSIONAL ENGINEER NO. 8104-S HAWAII, U.S.A.

THIS WORK WAS PREPARED BY ME OR UNDER MY SUPERVISION.

KSF, INC. — APRIL 30, 2012 LIC. EXP. DATE

DATE	REVISION
2/01/11	1 Revisions

STATE OF HAWAII
DEPARTMENT OF TRANSPORTATION
HIGHWAYS DIVISION

ABUTMENT 1
SECTION

HONOAPIILANI HIGHWAY REALIGNMENT, PHASE 1A
Future Keawe St Extension to Lahainaluna Rd, Part B
Fed. Aid Proj. No. NH-030-1(35)R

Scale: As Noted — Date: June, 2010

SHEET No. SB8.5 OF 6 SHEETS

FINAL DESIGN 328

ORIGINAL PLAN | SURVEY PLOTTED BY | DRAWN BY | TRACED BY | DESIGNED BY | QUANTITIES BY | CHECKED BY | NOTE BOOK No. | DATE

DRAWING NAME: Z:\00 ONGOING\40019.0-HONOAPIILANI LAHAINA BYPASS-KAHOMA WO\03-30-11 EM END BLOCKS\HH-SB901.DWG PLOT TIME: 03-30-11, 4:13 PM)

FED. ROAD DIST. NO.	STATE	FED. AID PROJ. NO.	FISCAL YEAR	SHEET NO.	TOTAL SHEETS
HAWAII	HAW.	NH-030-1(35)R	2009	328	383

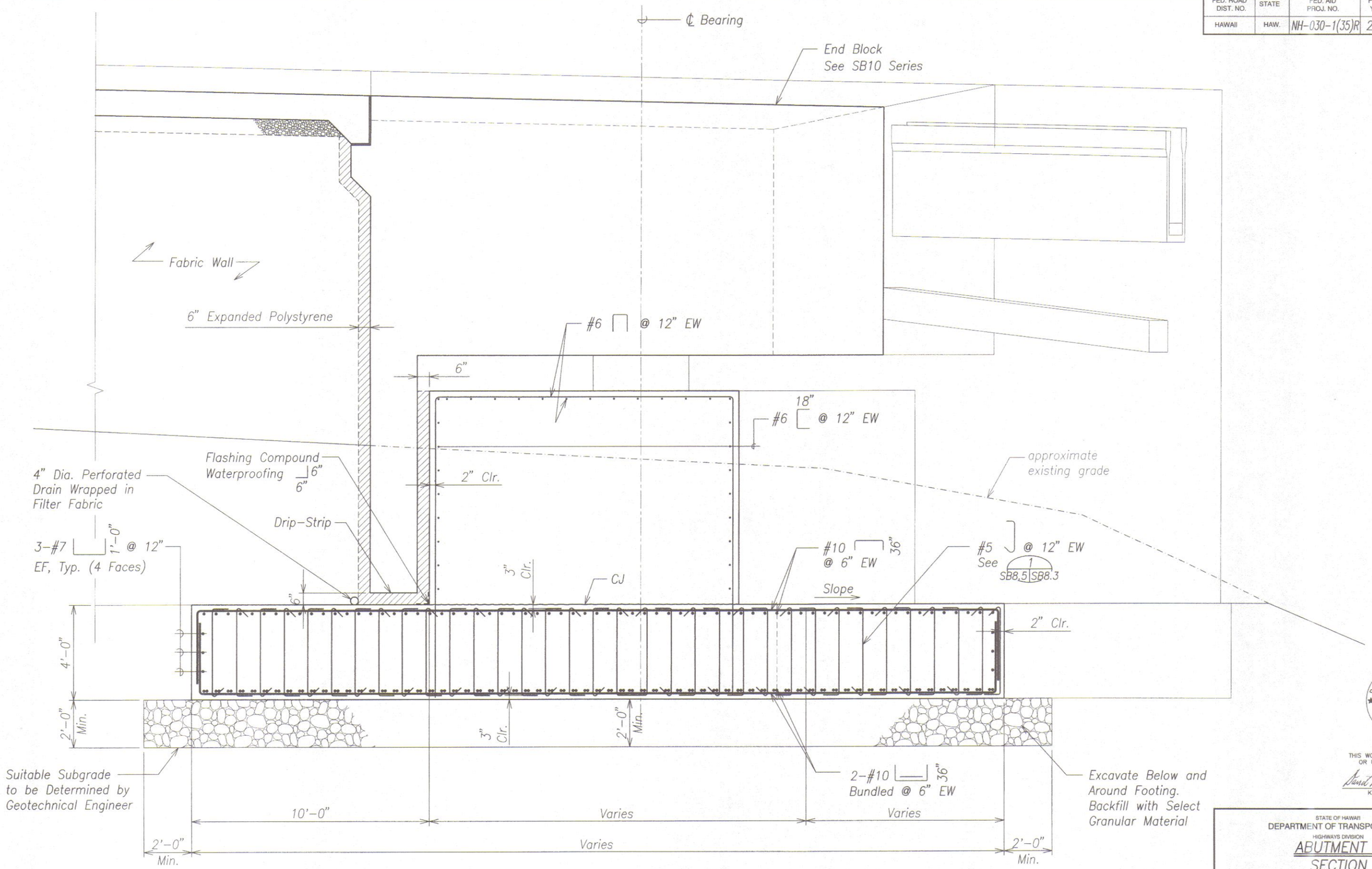

SECTION – ABUTMENT 1 (A SB8.3 SB8.5)

Scale: 1/2" = 1'-0"

DAVID K. FUJIWARA LICENSED PROFESSIONAL ENGINEER NO. 8104-S HAWAII, U.S.A.

THIS WORK WAS PREPARED BY ME OR UNDER MY SUPERVISION.

KSF, INC. APRIL 30, 2012 LIC. EXP. DATE

STATE OF HAWAII
DEPARTMENT OF TRANSPORTATION
HIGHWAYS DIVISION

ABUTMENT 1
SECTION

HONOAPIILANI HIGHWAY REALIGNMENT, PHASE 1A
Future Keawe St Extension to Lahainaluna Rd, Part B
Fed. Aid Proj. No. NH-030-1(35)R

Scale: As Noted Date: June, 2010

SHEET No. SB8.5 OF 6 SHEETS

FINAL DESIGN ~~328~~ Rev.

ORIGINAL PLAN	SURVEY PLOTTED BY	DATE
	DRAWN BY	
NOTE BOOK	TRACED BY	
	DESIGNED BY	
	QUANTITIES BY	
No.	CHECKED BY	

DRAWING NAME: Z:\00 ONGOING\40019.0-HONOAPIILANI LAHAINA BYPASS-KAHOMA WO\06-15-10 COMBINE LAHAINA FINAL DESIGN\HH-SB801.DWG PLOT TIME: 06-14-10, 8:07 PM

FED. ROAD DIST. NO.	STATE	FED. AID PROJ. NO.	FISCAL YEAR	SHEET NO.	TOTAL SHEETS
HAWAII	HAW.	NH-030-1(35)R	2009	329	383

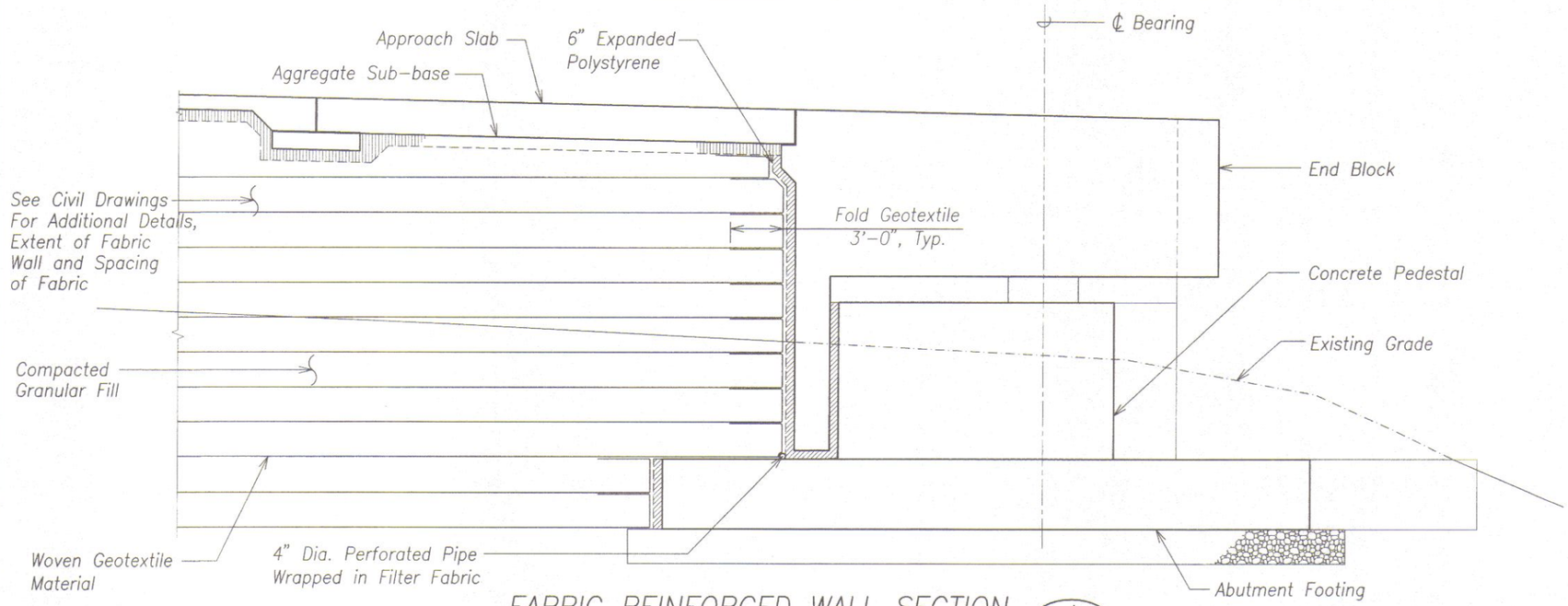

FABRIC REINFORCED WALL SECTION (A / SB8.6 | SB8.6)

Scale: 1/4" = 1'-0"

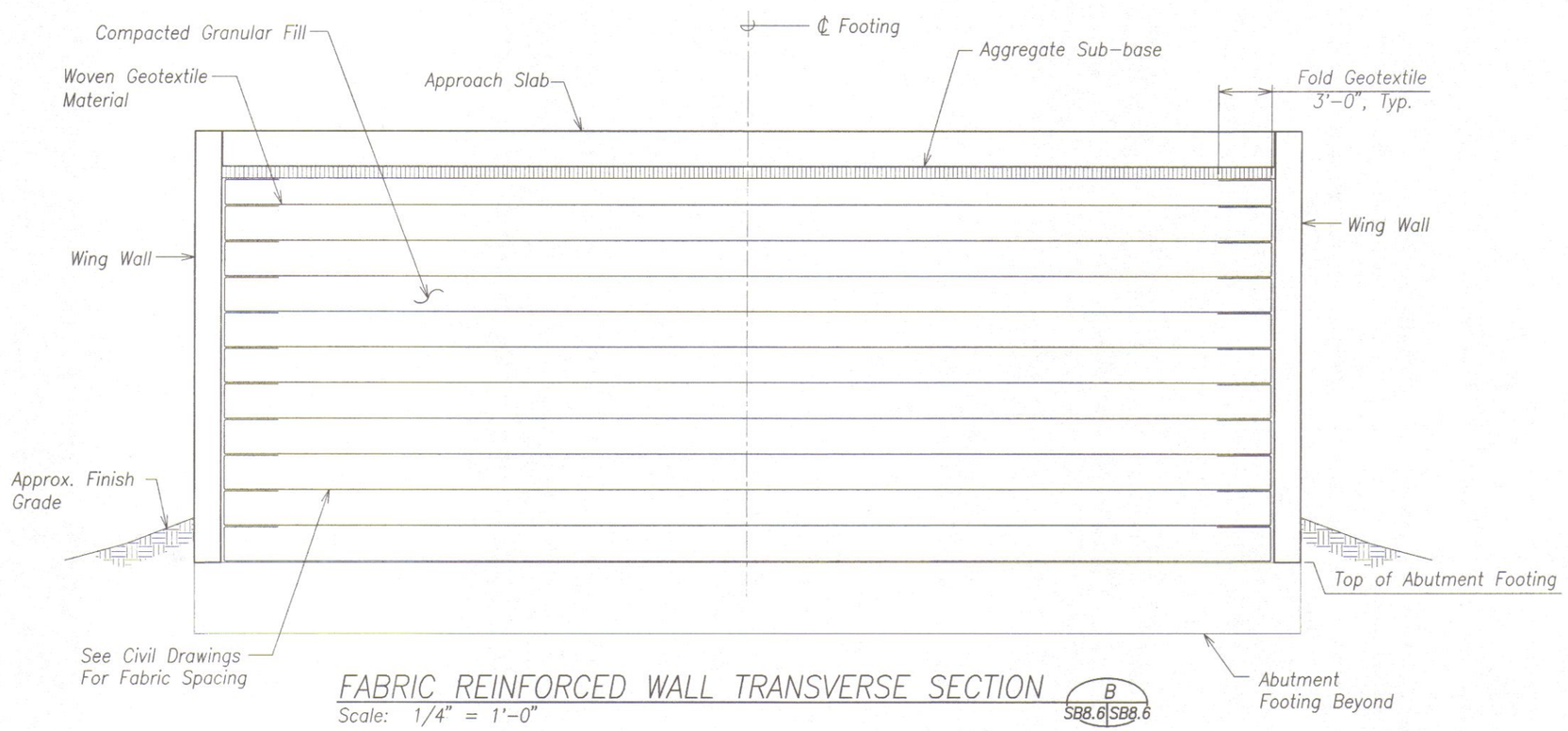

FABRIC REINFORCED WALL TRANSVERSE SECTION (B / SB8.6 | SB8.6)

Scale: 1/4" = 1'-0"

LICENSED PROFESSIONAL ENGINEER NO. 8104-S DAVID K. FUJIWARA HAWAII, U.S.A.

THIS WORK WAS PREPARED BY ME OR UNDER MY SUPERVISION.

KSF, INC. — APRIL 30, 2012 UC. EXP. DATE

STATE OF HAWAII
DEPARTMENT OF TRANSPORTATION
HIGHWAYS DIVISION

TYPICAL FABRIC REINFORCED RETAINING WALL SECTIONS

HONOAPIILANI HIGHWAY REALIGNMENT, PHASE 1A

Future Keawe St Extension to Lahainaluna Rd, Part B

Fed. Aid Proj. No. NH-030-1(35)R

Scale: As Noted — Date: June, 2010

SHEET No. SB8.6 OF 6 SHEETS

FINAL DESIGN 329

ORIGINAL PLAN	SURVEY PLOTTED BY	DATE
	DRAWN BY	
NOTE BOOK	TRACED BY	
	DESIGNED BY	
No.	QUANTITIES BY	
	CHECKED BY	

DRAWING NAME: Z:\00 ONGOING\40019.0-HONOAPIILANI LAHAINA BYPASS-KAHOMA WO\06-15-10 COMBINE LAHAINA FINAL DESIGN\HI-SB806.DWG PLOT TIME: 06-14-10, 8:09 PM

FED. ROAD DIST. NO.	STATE	FED. AID PROJ. NO.	FISCAL YEAR	SHEET NO.	TOTAL SHEETS
HAWAII	HAW.	NH-030-1(35)R	2009	330	383

NOTE:

Probe Hole location, see Sht. SB9.3 for spacing. See Special Provision Section 660.

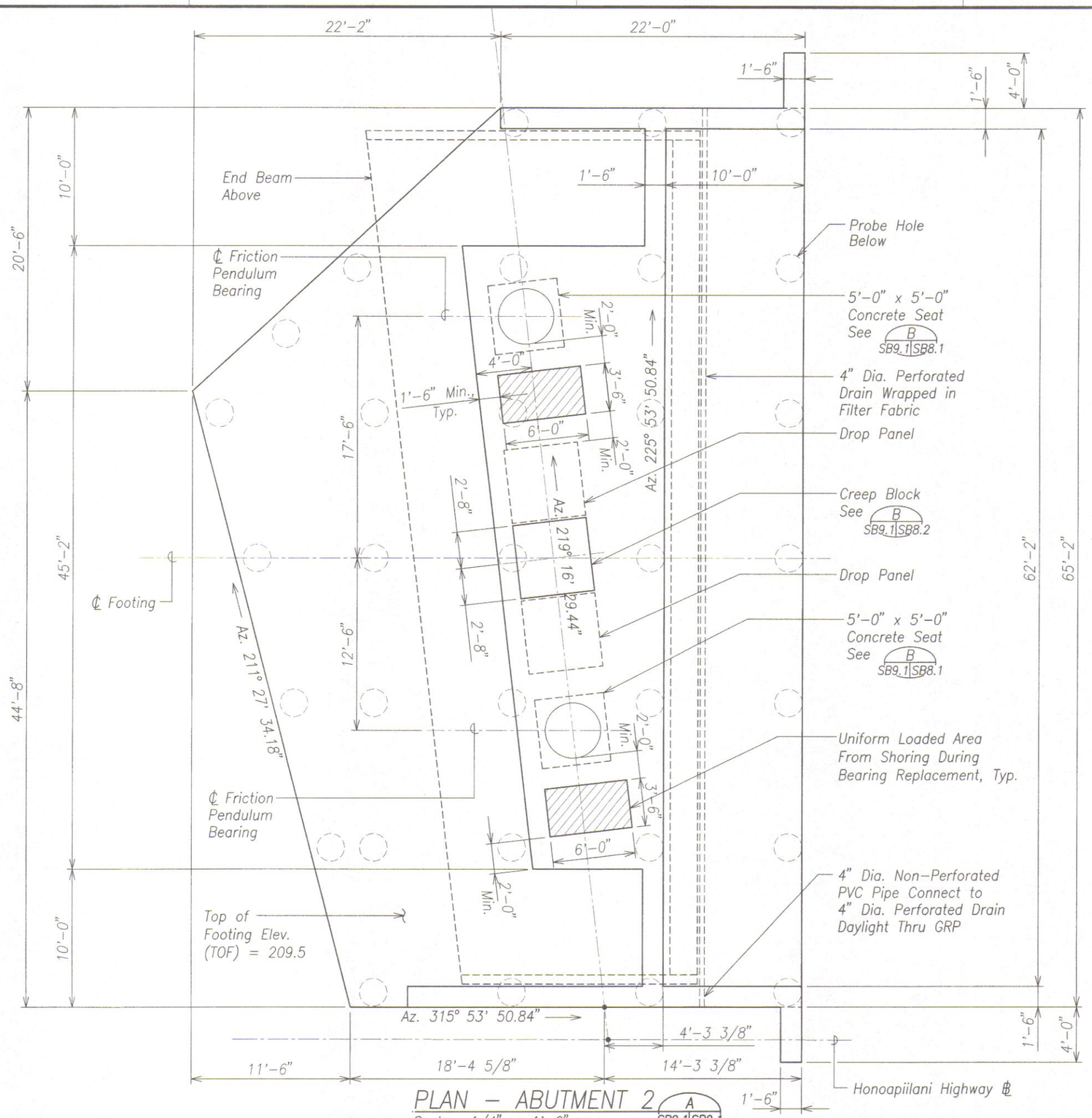

PLAN – ABUTMENT 2 (A SB9.1 SB9.1)

Scale: 1/4" = 1'-0"

DAVID K. FUJIWARA LICENSED PROFESSIONAL ENGINEER NO. 8104-S HAWAII, U.S.A.

THIS WORK WAS PREPARED BY ME OR UNDER MY SUPERVISION.

KSF, INC. — APRIL 30, 2012 LIC. EXP. DATE

STATE OF HAWAII
DEPARTMENT OF TRANSPORTATION
HIGHWAYS DIVISION

ABUTMENT 2 PLAN

HONOAPIILANI HIGHWAY REALIGNMENT, PHASE 1A
Future Keawe St Extension to Lahainaluna Rd, Part B
Fed. Aid Proj. No. NH-030-1(35)R

Scale: As Noted — Date: June, 2010

SHEET No. SB9.1 OF 5 SHEETS

ORIGINAL PLAN | NOTE BOOK No. | SURVEY PLOTTED BY | DRAWN BY | TRACED BY | DESIGNED BY | QUANTITIES BY | CHECKED BY | DATE

DRAWING NAME: Z:\00 ONGOING\40019.0-HONOAPIILANI LAHAINA BYPASS-KAHOMA WD\06-15-10 COMBINE LAHAINA FINAL DESIGN\HI-SB901.DWG PLOT TIME: 06-14-10, 8:10 PM

FINAL DESIGN 330

FED. ROAD DIST. NO.	STATE	FED. AID PROJ. NO.	FISCAL YEAR	SHEET NO.	TOTAL SHEETS
HAWAII	HAW.	NH-030-1(35)R	2009	331	383

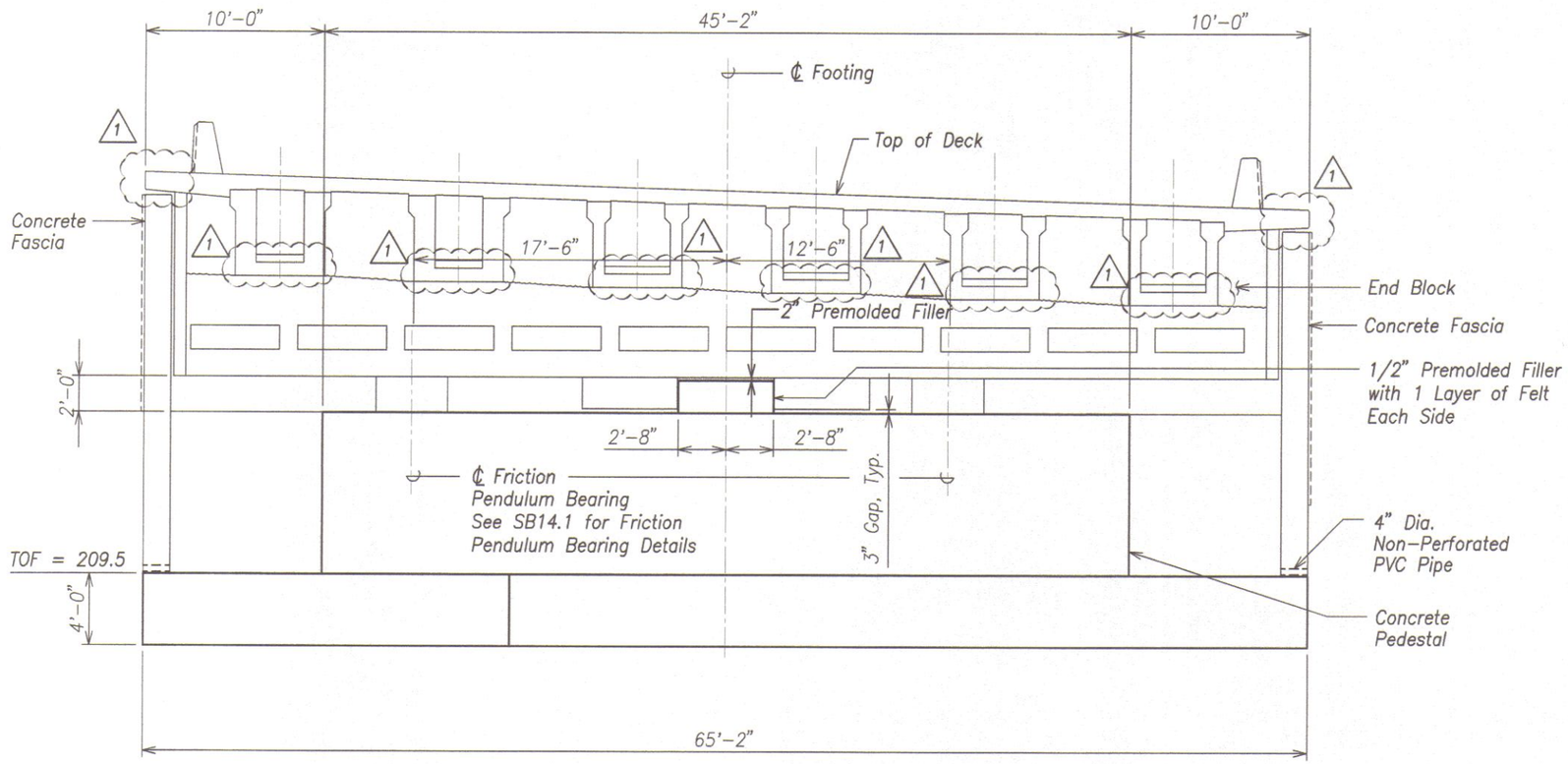

ELEVATION – ABUTMENT 2

Scale: 1/4" = 1'-0"

A SB9.2 | SB9.2

DAVID K. FUJIWARA LICENSED PROFESSIONAL ENGINEER NO. 8104-S HAWAII, U.S.A.

THIS WORK WAS PREPARED BY ME OR UNDER MY SUPERVISION.

KSF, INC. — APRIL 30, 2012 LIC. EXP. DATE

STATE OF HAWAII
DEPARTMENT OF TRANSPORTATION
HIGHWAYS DIVISION

ABUTMENT 2 ELEVATION

HONOAPIILANI HIGHWAY REALIGNMENT, PHASE 1A
Future Keawe St Extension to Lahainaluna Rd, Part B
Fed. Aid Proj. No. NH-030-1(35)R

Scale: As Noted — Date: June, 2010

SHEET No. SB9.2 OF 5 SHEETS

DATE	REVISION
2/01/11	1 Revisions

ORIGINAL PLAN — SURVEY PLOTTED BY / DRAWN BY / TRACED BY / DESIGNED BY / QUANTITIES BY / CHECKED BY — DATE
NOTE BOOK No.

DRAWING NAME: Z:\00 ONGOING\40019.0-HONOAPIILANI LAHAINA BYPASS-KAHOMA WO\03-30-11 EM END BLOCKS\HH-SB901.DWG PLOT TIME: 03-30-11, 4:14 PM

FED. ROAD DIST. NO.	STATE	FED. AID PROJ. NO.	FISCAL YEAR	SHEET NO.	TOTAL SHEETS
HAWAII	HAW.	NH-030-1(35)R	2009	331	383

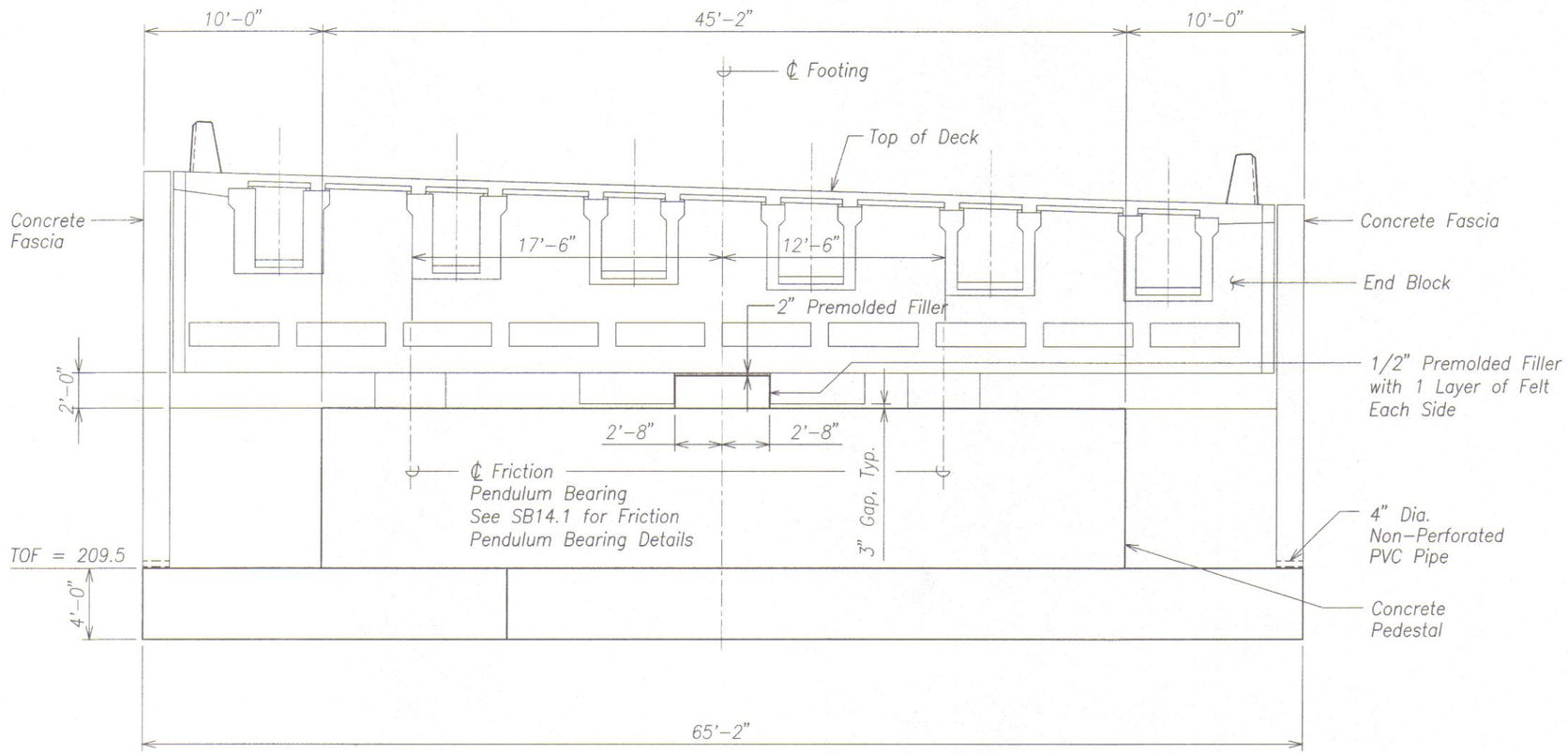

ELEVATION – ABUTMENT 2

Scale: 1/4" = 1'-0"

A
SB9.2 | SB9.2

DAVID K. FUJIWARA
LICENSED PROFESSIONAL ENGINEER
NO. 8104-S
HAWAII, U.S.A.

THIS WORK WAS PREPARED BY ME OR UNDER MY SUPERVISION.

KSF, INC. — APRIL 30, 2012 LIC. EXP. DATE

STATE OF HAWAII
DEPARTMENT OF TRANSPORTATION
HIGHWAYS DIVISION

ABUTMENT 2 ELEVATION

HONOAPIILANI HIGHWAY REALIGNMENT, PHASE 1A
Future Keawe St Extension to Lahainaluna Rd, Part B
Fed. Aid Proj. No. NH-030-1(35)R

Scale: As Noted — Date: June, 2010

SHEET No. SB9.2 OF 5 SHEETS

FINAL DESIGN 331 Rev.

ORIGINAL PLAN	SURVEY PLOTTED BY	DATE
	DRAWN BY	
NOTE BOOK	TRACED BY	
	DESIGNED BY	
No.	QUANTITIES BY	
	CHECKED BY	

DRAWING NAME: Z:\DO ONGOING\40019.0-HONOAPIILANI LAHAINA BYPASS-KAHOMA WO\06-15-10 COMBINE LAHAINA FINAL DESIGN\HH-SB901.DWG PLOT TIME: 06-14-10, 8:10 PM

FED. ROAD DIST. NO.	STATE	FED. AID PROJ. NO.	FISCAL YEAR	SHEET NO.	TOTAL SHEETS
HAWAII	HAW.	NH-030-1(35)R	2009	332	383

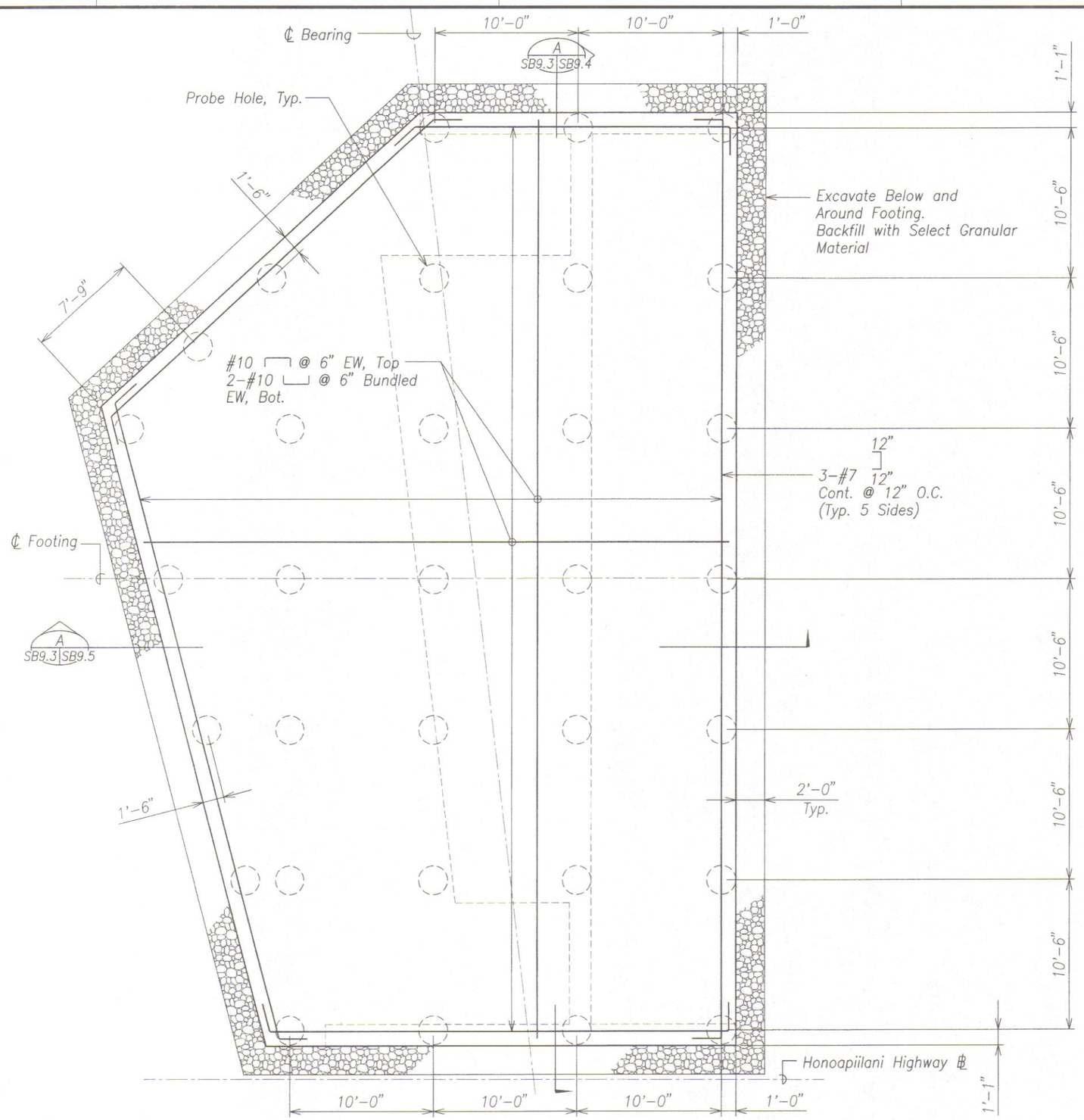

FOOTING REINFORCING PLAN – ABUTMENT 2 (A SB9.3 SB9.3)

Scale: 1/4" = 1'-0"

DAVID K. FUJIMARA LICENSED PROFESSIONAL ENGINEER NO. 8104-S HAWAII, U.S.A.

THIS WORK WAS PREPARED BY ME OR UNDER MY SUPERVISION.

KSF, INC. — APRIL 30, 2012 LIC. EXP. DATE

STATE OF HAWAII
DEPARTMENT OF TRANSPORTATION
HIGHWAYS DIVISION

ABUTMENT 2
FOOTING REINFORCING PLAN
HONOAPIILANI HIGHWAY REALIGNMENT, PHASE 1A
Future Keawe St Extension to Lahainaluna Rd, Part B
Fed. Aid Proj. No. NH-030-1(35)R

Scale: As Noted — Date: June, 2010

SHEET No. SB9.3 OF 5 SHEETS

FINAL DESIGN 332

ORIGINAL PLAN	SURVEY PLOTTED BY	DATE
	DRAWN BY	
NOTE BOOK	TRACED BY	
	DESIGNED BY	
No.	QUANTITIES BY	
	CHECKED BY	

DRAWING NAME: Z:\00 ONGOING\40019.0-HONOAPIILANI LAHAINA BYPASS-KAHOMA WC\06-15-10 COMBINE LAHAINA FINAL DESIGN\HH-SB901.DWG PLOT TIME: 06-14-10, 8:12 PM)

FED. ROAD DIST. NO.	STATE	FED. AID PROJ. NO.	FISCAL YEAR	SHEET NO.	TOTAL SHEETS
HAWAII	HAW.	NH-030-1(35)R	2009	333	383

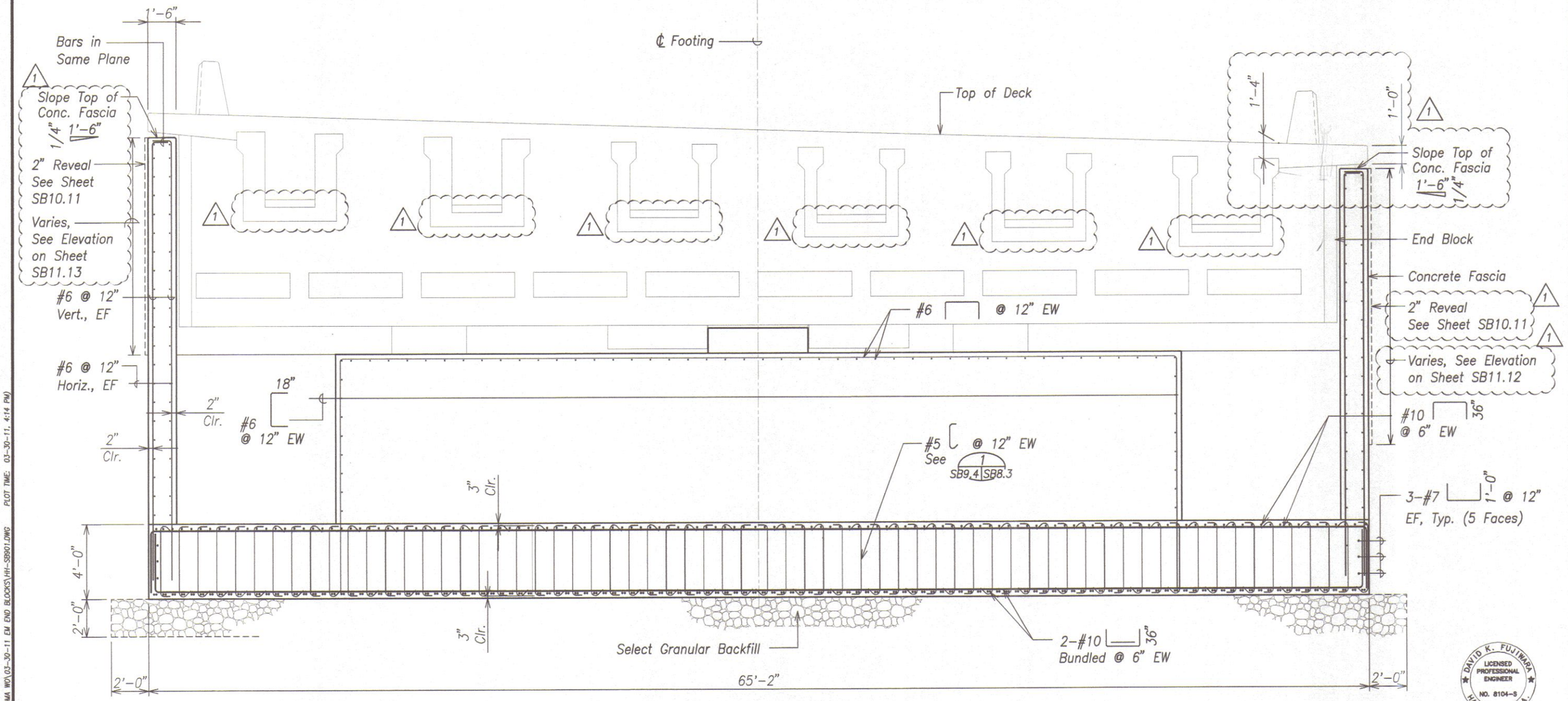

ELEVATION – ABUTMENT 2

Scale: 3/8" = 1'-0"

A SB9.3 SB9.4

DAVID K. FUJIWARA LICENSED PROFESSIONAL ENGINEER NO. 8104-S HAWAII, U.S.A.

THIS WORK WAS PREPARED BY ME OR UNDER MY SUPERVISION.

KSF, INC. — APRIL 30, 2012 LIC. EXP. DATE

STATE OF HAWAII
DEPARTMENT OF TRANSPORTATION
HIGHWAYS DIVISION

ABUTMENT 2 ELEVATION

HONOAPIILANI HIGHWAY REALIGNMENT, PHASE 1A
Future Keawe St Extension to Lahainaluna Rd, Part B
Fed. Aid Proj. No. NH-030-1(35)R

Scale: As Noted — Date: June, 2010

SHEET No. SB9.4 OF 5 SHEETS

DATE	REVISION
2/01/11	1 Revisions

ORIGINAL PLAN — NOTE BOOK No. ___

SURVEY PLOTTED BY ___ DATE ___
DRAWN BY ___
TRACED BY ___
DESIGNED BY ___
QUANTITIES BY ___
CHECKED BY ___

DRAWING NAME: Z:\00 ONGOING\40019.0-HONOAPIILANI LAHAINA BYPASS-KAHOMA WO\03-30-11 EM END BLOCKS\HH-SB901.DWG PLOT TIME: 03-30-11, 4:14 PM

FINAL DESIGN 333

FED. ROAD DIST. NO.	STATE	FED. AID PROJ. NO.	FISCAL YEAR	SHEET NO.	TOTAL SHEETS
HAWAII	HAW.	NH-030-1(35)R	2009	333	383

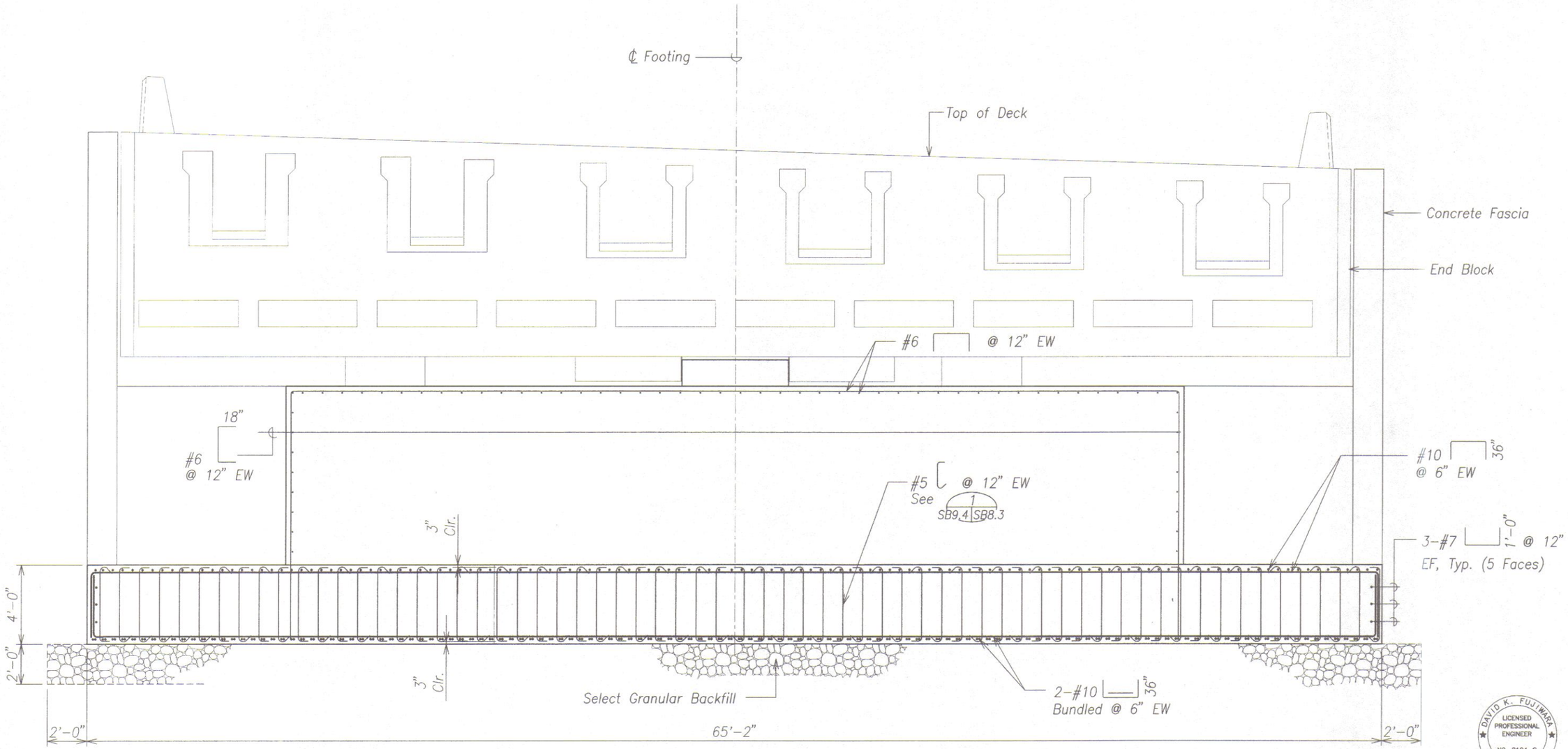

ELEVATION – ABUTMENT 2 (A SB9.3 SB9.4)

Scale: 3/8" = 1'-0"

DAVID K. FUJIWARA LICENSED PROFESSIONAL ENGINEER NO. 8104-S HAWAII, U.S.A.

THIS WORK WAS PREPARED BY ME OR UNDER MY SUPERVISION.

David K. Fujiwara — KSF, INC. — APRIL 30, 2012 LIC. EXP. DATE

STATE OF HAWAII
DEPARTMENT OF TRANSPORTATION
HIGHWAYS DIVISION

ABUTMENT 2 ELEVATION

HONOAPIILANI HIGHWAY REALIGNMENT, PHASE 1A
Future Keawe St Extension to Lahainaluna Rd, Part B
Fed. Aid Proj. No. NH-030-1(35)R

Scale: As Noted — Date: June, 2010

SHEET No. SB9.4 OF 5 SHEETS

FINAL DESIGN ~~333~~ Rev.

ORIGINAL PLAN	SURVEY PLOTTED BY	DATE
	DRAWN BY	"
NOTE BOOK	TRACED BY	"
	DESIGNED BY	"
No.	QUANTITIES BY	"
	CHECKED BY	"

DRAWING NAME: Z:\00 ONGOING\40019.0-HONOAPIILANI LAHAINA BYPASS-KAHOMA WO\06-15-10 COMBINE LAHAINA FINAL DESIGN\H1-SB901.DWG PLOT TIME: 06-14-10, 8:12 PM

FED. ROAD DIST. NO.	STATE	FED. AID PROJ. NO.	FISCAL YEAR	SHEET NO.	TOTAL SHEETS
HAWAII	HAW.	NH-030-1(35)R	2009	334	383

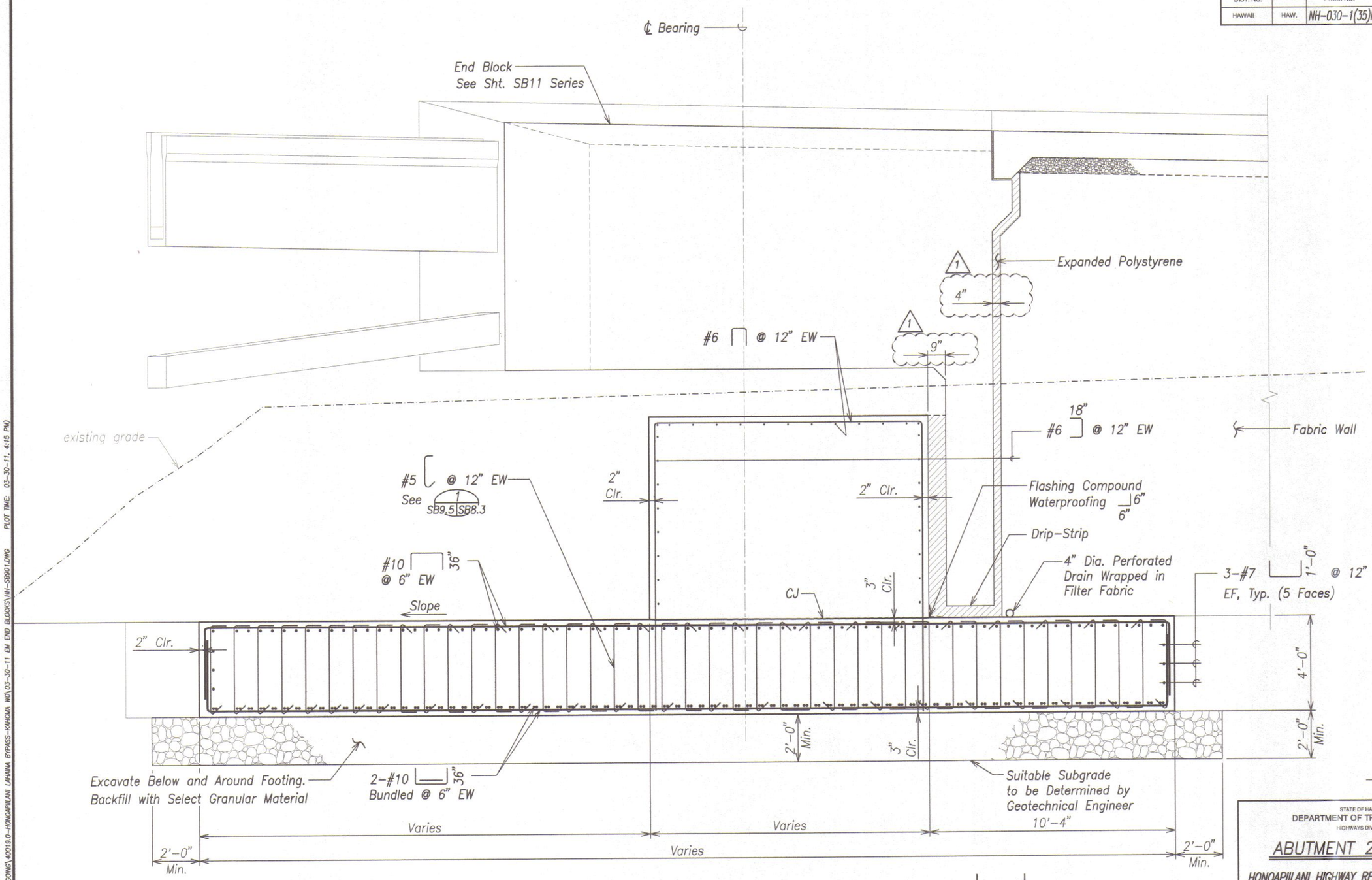

SECTION – ABUTMENT 2

Scale: 1/2" = 1'-0"

A SB9.3 SB9.5

DAVID K. FUJIMARA LICENSED PROFESSIONAL ENGINEER NO. 8104-S HAWAII, U.S.A.

THIS WORK WAS PREPARED BY ME OR UNDER MY SUPERVISION.

KSF, INC. — APRIL 30, 2012 LIC. EXP. DATE

STATE OF HAWAII
DEPARTMENT OF TRANSPORTATION
HIGHWAYS DIVISION

ABUTMENT 2 SECTION

HONOAPIILANI HIGHWAY REALIGNMENT, PHASE 1A
Future Keawe St Extension to Lahainaluna Rd, Part B
Fed. Aid Proj. No. NH-030-1(35)R

Scale: As Noted — Date: June, 2010

SHEET No. SB9.5 OF 5 SHEETS

DATE	REVISION
2/01/11	1 Revisions

ORIGINAL PLAN — NOTE BOOK No. — SURVEY PLOTTED BY — DRAWN BY — TRACED BY — DESIGNED BY — QUANTITIES BY — CHECKED BY — DATE

DRAWING NAME: Z:\00 ONGOING\40019.0-HONOAPIILANI LAHAINA BYPASS-KAHOMA WO\03-30-11 EM END BLOCKS\HH-SB901.DWG PLOT TIME: 03-30-11, 4:15 PM

FINAL DESIGN 334

FED. ROAD DIST. NO.	STATE	FED. AID PROJ. NO.	FISCAL YEAR	SHEET NO.	TOTAL SHEETS
HAWAII	HAW.	NH-030-1(35)R	2009	334	383

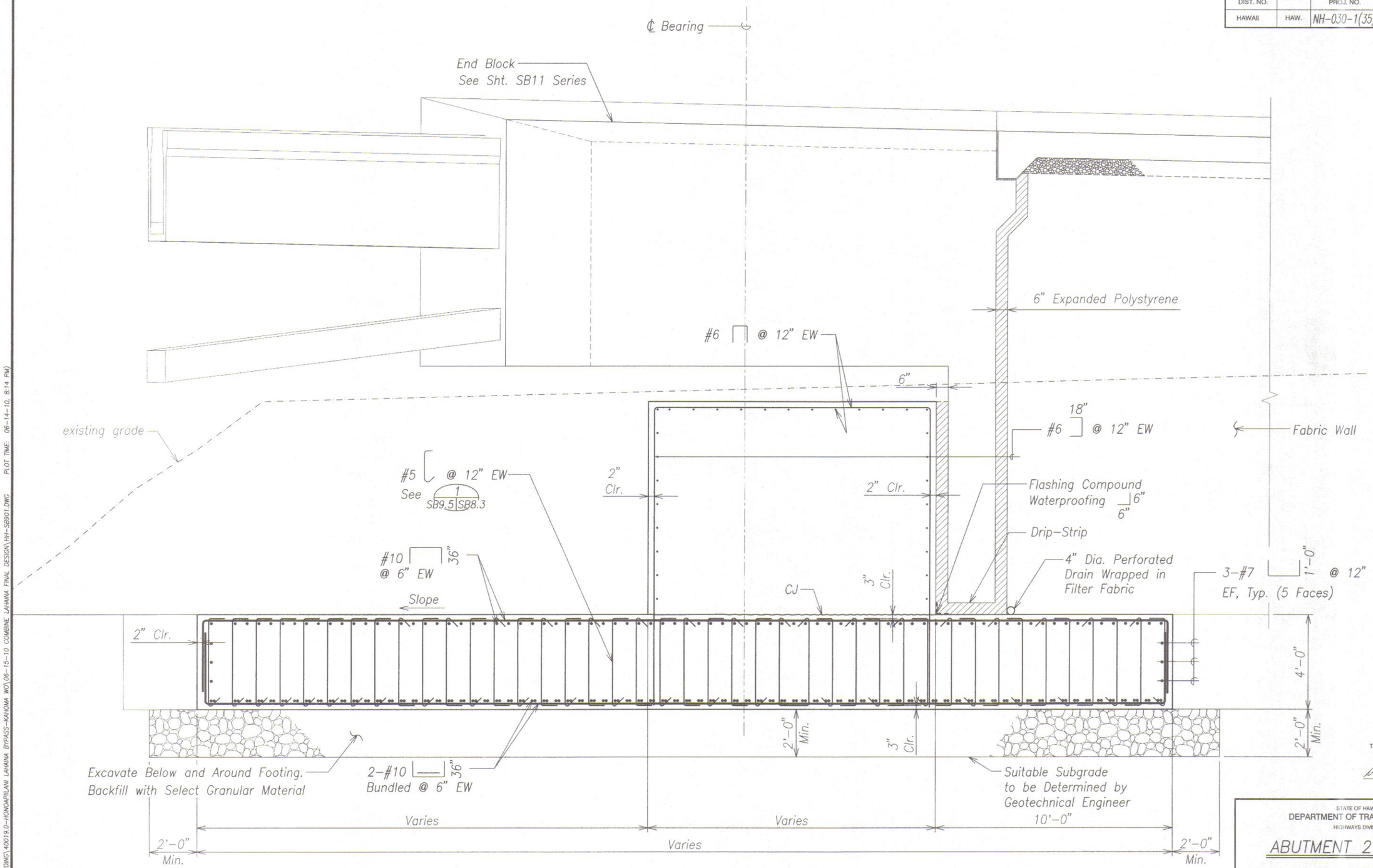

SECTION – ABUTMENT 2 (A SB9.3 SB9.5)

Scale: 1/2" = 1'-0"

DAVID K. FUJIWARA LICENSED PROFESSIONAL ENGINEER NO. 8104-S HAWAII, U.S.A.

THIS WORK WAS PREPARED BY ME OR UNDER MY SUPERVISION.

KSF, INC. — APRIL 30, 2012 LIC. EXP. DATE

STATE OF HAWAII
DEPARTMENT OF TRANSPORTATION
HIGHWAYS DIVISION

ABUTMENT 2 SECTION

HONOAPIILANI HIGHWAY REALIGNMENT, PHASE 1A
Future Keawe St Extension to Lahainaluna Rd, Part B
Fed. Aid Proj. No. NH-030-1(35)R

Scale: As Noted — Date: June, 2010

SHEET No. SB9.5 OF 5 SHEETS

FINAL DESIGN ~~334~~ RW

ORIGINAL PLAN	SURVEY PLOTTED BY	DATE
	DRAWN BY	"
	TRACED BY	"
NOTE BOOK	DESIGNED BY	"
	QUANTITIES BY	"
No.	CHECKED BY	"

DRAWING NAME: Z:\00 ONGOING\40019.0-HONOAPIILANI LAHAINA BYPASS-KAHOMA WO\06-15-10 COMBINE LAHAINA FINAL DESIGN\HH-SB901.DWG PLOT TIME: 06-14-10, 8:14 PM

FED. ROAD DIST. NO.	STATE	FED. AID PROJ. NO.	FISCAL YEAR	SHEET NO.	TOTAL SHEETS
HAWAII	HAW.	NH-030-1(35)R	2009	335	383

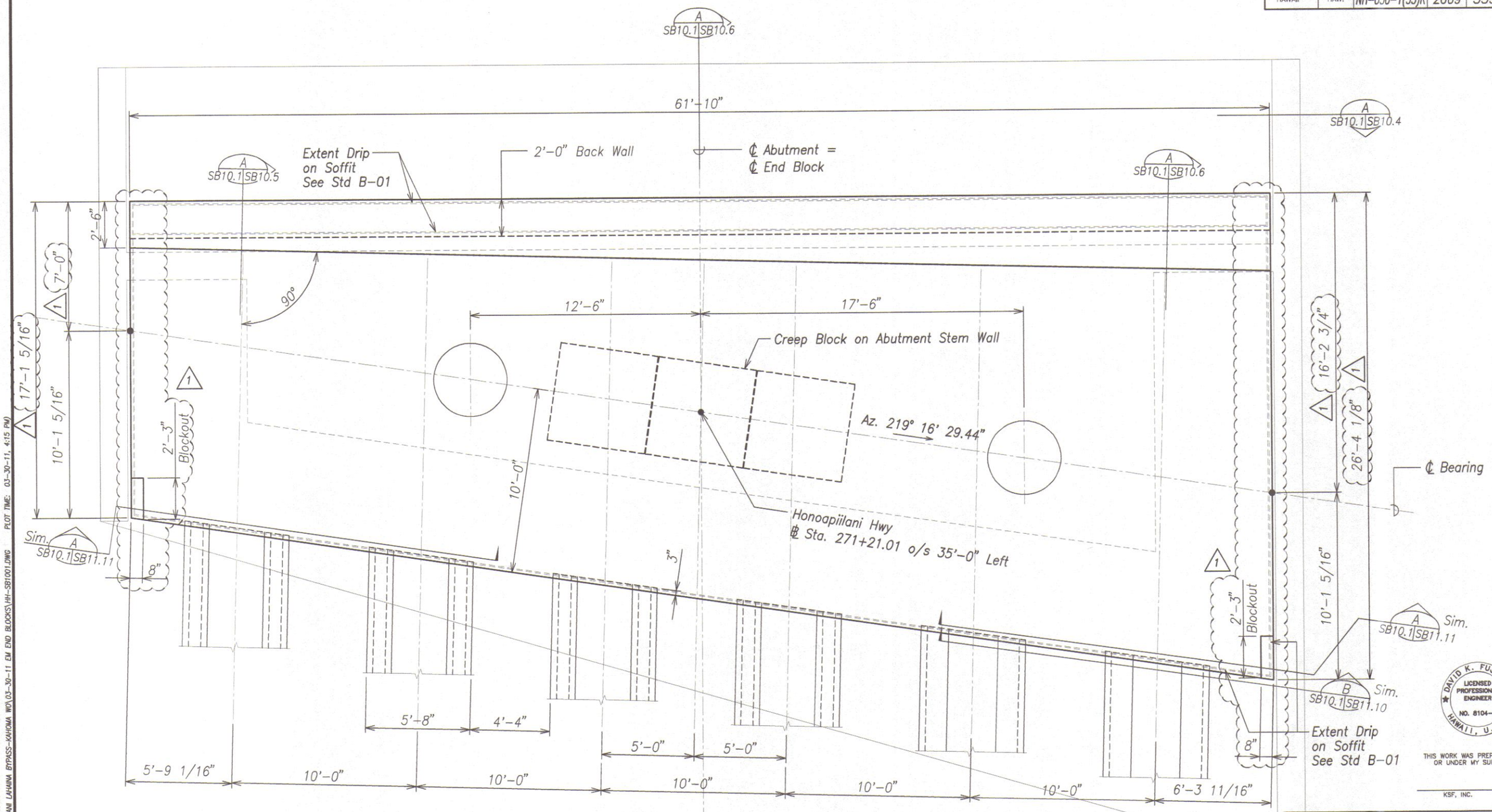

END BLOCK AT ABUTMENT 1 – PLAN

A SB10.1 SB10.1

Scale: 3/8" = 1'-0"

DATE	REVISION
2/01/11	1 Revisions

DAVID K. FUJIWARA LICENSED PROFESSIONAL ENGINEER NO. 8104-S HAWAII, U.S.A.

THIS WORK WAS PREPARED BY ME OR UNDER MY SUPERVISION.

KSF, INC. — APRIL 30, 2012 LIC. EXP. DATE

STATE OF HAWAII
DEPARTMENT OF TRANSPORTATION
HIGHWAYS DIVISION

END BLOCK AT ABUTMENT 1 PLAN

HONOAPIILANI HIGHWAY REALIGNMENT, PHASE 1A
Future Keawe St Extension to Lahainaluna Rd, Part B
Fed. Aid Proj. No. NH-030-1(35)R

Scale: As Noted — Date: June, 2010

SHEET No. SB10.1 OF 10 SHEETS

ORIGINAL PLAN | SURVEY PLOTTED BY | DRAWN BY | TRACED BY | DESIGNED BY | QUANTITIES BY | CHECKED BY | DATE | NOTE BOOK No.

DRAWING NAME: Z:\00 ONGOING\40019.0-HONOAPIILANI LAHAINA BYPASS-KAHONA WO\03-30-11 EM END BLOCKS\HH-SB1001.DWG PLOT TIME: 03-30-11, 4:15 PM

FINAL DESIGN 335

FED. ROAD DIST. NO.	STATE	FED. AID PROJ. NO.	FISCAL YEAR	SHEET NO.	TOTAL SHEETS
HAWAII	HAW.	NH-030-1(35)R	2009	335	383

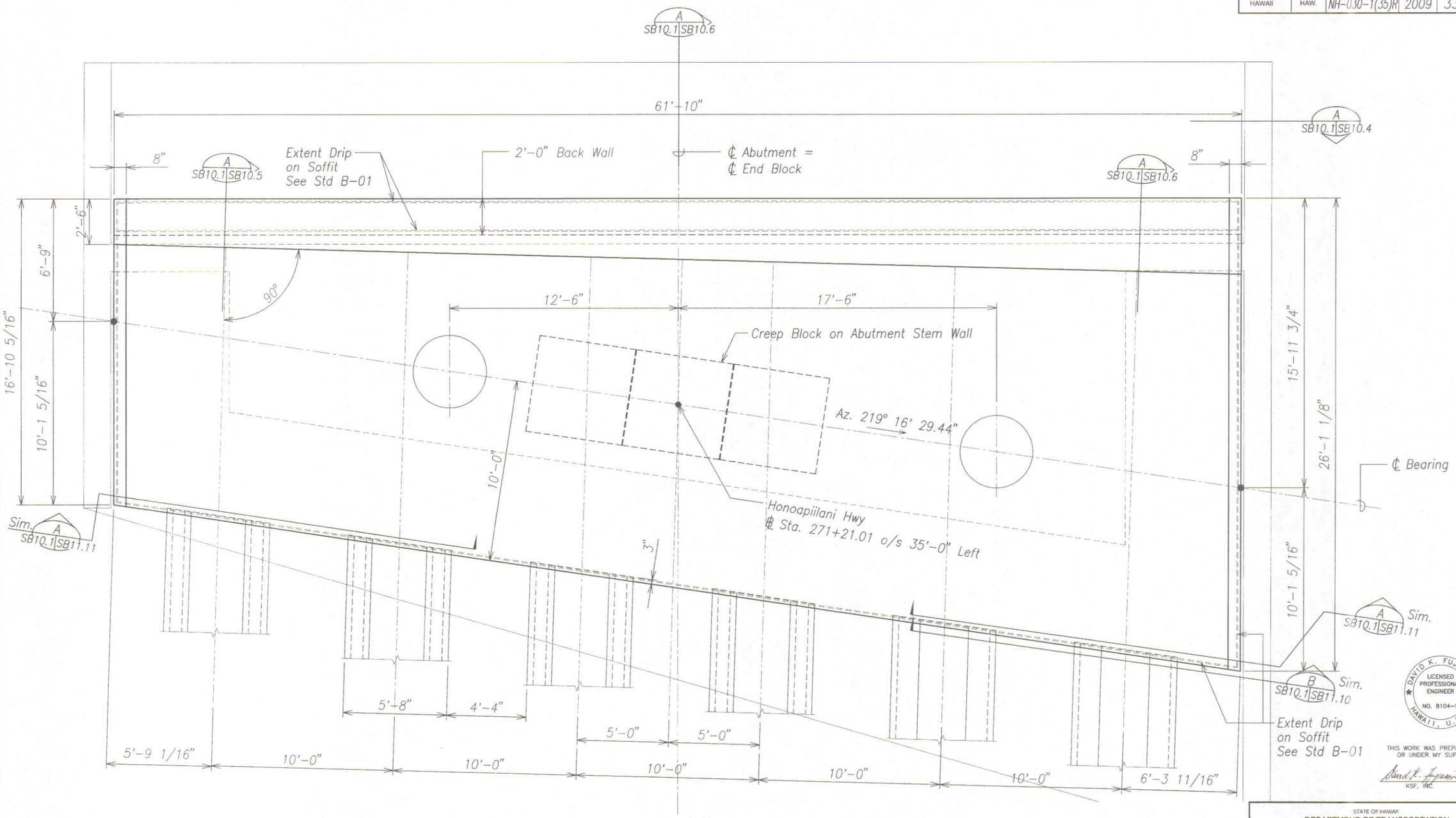

END BLOCK AT ABUTMENT 1 – PLAN

A SB10.1 SB10.1

Scale: 3/8" = 1'-0"

DAVID K. FUJIWARA LICENSED PROFESSIONAL ENGINEER NO. 8104-S HAWAII, U.S.A.

THIS WORK WAS PREPARED BY ME OR UNDER MY SUPERVISION.

KSF, INC. APRIL 30, 2012 LIC. EXP. DATE

STATE OF HAWAII
DEPARTMENT OF TRANSPORTATION
HIGHWAYS DIVISION

END BLOCK AT ABUTMENT 1 PLAN

HONOAPIILANI HIGHWAY REALIGNMENT, PHASE 1A
Future Keawe St Extension to Lahainaluna Rd, Part B
Fed. Aid Proj. No. NH-030-1(35)R

Scale: As Noted Date: June, 2010

SHEET No. SB10.1 OF 10 SHEETS

FINAL DESIGN ~~335~~ Rev

ORIGINAL PLAN	SURVEY PLOTTED BY	DATE
	DRAWN BY	
NOTE BOOK	TRACED BY	
	DESIGNED BY	
	QUANTITIES BY	
No.	CHECKED BY	

DRAWING NAME: Z:\00 ONGOING\40019.0-HONOAPIILANI LAHAINA BYPASS-KAHOMA WO\06-15-10 COMBINE LAHAINA FINAL DESIGN\HH-SB1001.DWG PLOT TIME: 06-14-10, 8:15 PM)

FED. ROAD DIST. NO.	STATE	FED. AID PROJ. NO.	FISCAL YEAR	SHEET NO.	TOTAL SHEETS
HAWAII	HAW.	NH-030-1(35)R	2009	336	383

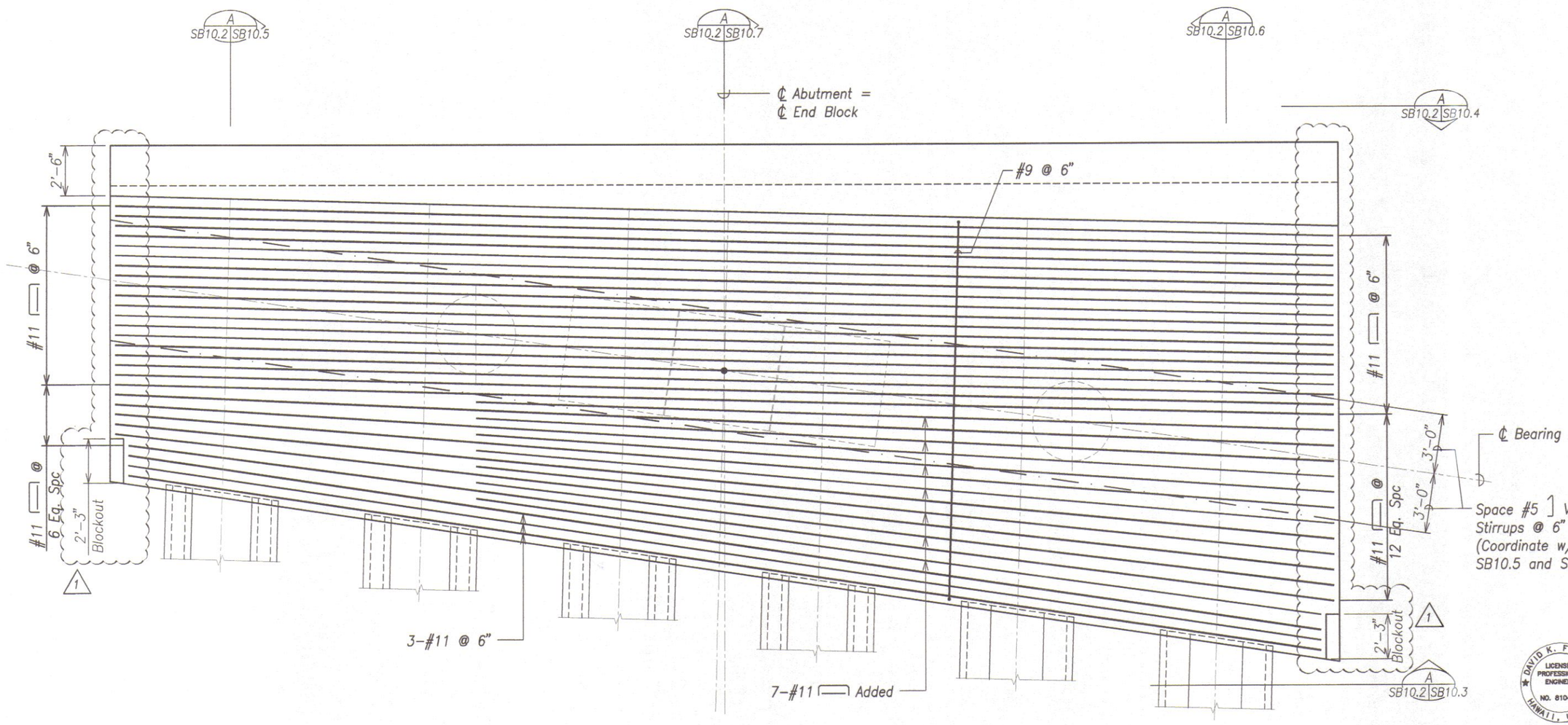

END BLOCK AT ABUTMENT 1 – REINFORCING (A SB10.2 SB10.2)

Scale: 3/8" = 1'-0"

DAVID K. FUJIWARA
LICENSED PROFESSIONAL ENGINEER
NO. 8104-S
HAWAII, U.S.A.

THIS WORK WAS PREPARED BY ME OR UNDER MY SUPERVISION.

KSF, INC. — APRIL 30, 2012 LIC. EXP. DATE

DATE	REVISION
2/01/11	1 Revisions

STATE OF HAWAII
DEPARTMENT OF TRANSPORTATION
HIGHWAYS DIVISION

END BLOCK AT ABUTMENT 1
PLAN – REINFORCING LAYOUT
HONOAPIILANI HIGHWAY REALIGNMENT, PHASE 1A
Future Keawe St Extension to Lahainaluna Rd, Part B
Fed. Aid Proj. No. NH-030-1(35)R

Scale: As Noted — Date: June, 2010

SHEET No. SB10.2 OF 10 SHEETS

ORIGINAL PLAN — SURVEY PLOTTED BY / DRAWN BY / TRACED BY / DESIGNED BY / QUANTITIES BY / CHECKED BY — DATE
NOTE BOOK No.

DRAWING NAME: Z:\00 ONGOING\40019.0-HONOAPIILANI LAHAINA BYPASS-KAHOMA WO\03-30-11 EM END BLOCKS\HH-SB1001.DWG PLOT TIME: 03-30-11, 4:16 PM)

FED. ROAD DIST. NO.	STATE	FED. AID PROJ. NO.	FISCAL YEAR	SHEET NO.	TOTAL SHEETS
HAWAII	HAW.	NH-030-1(35)R	2009	336	383

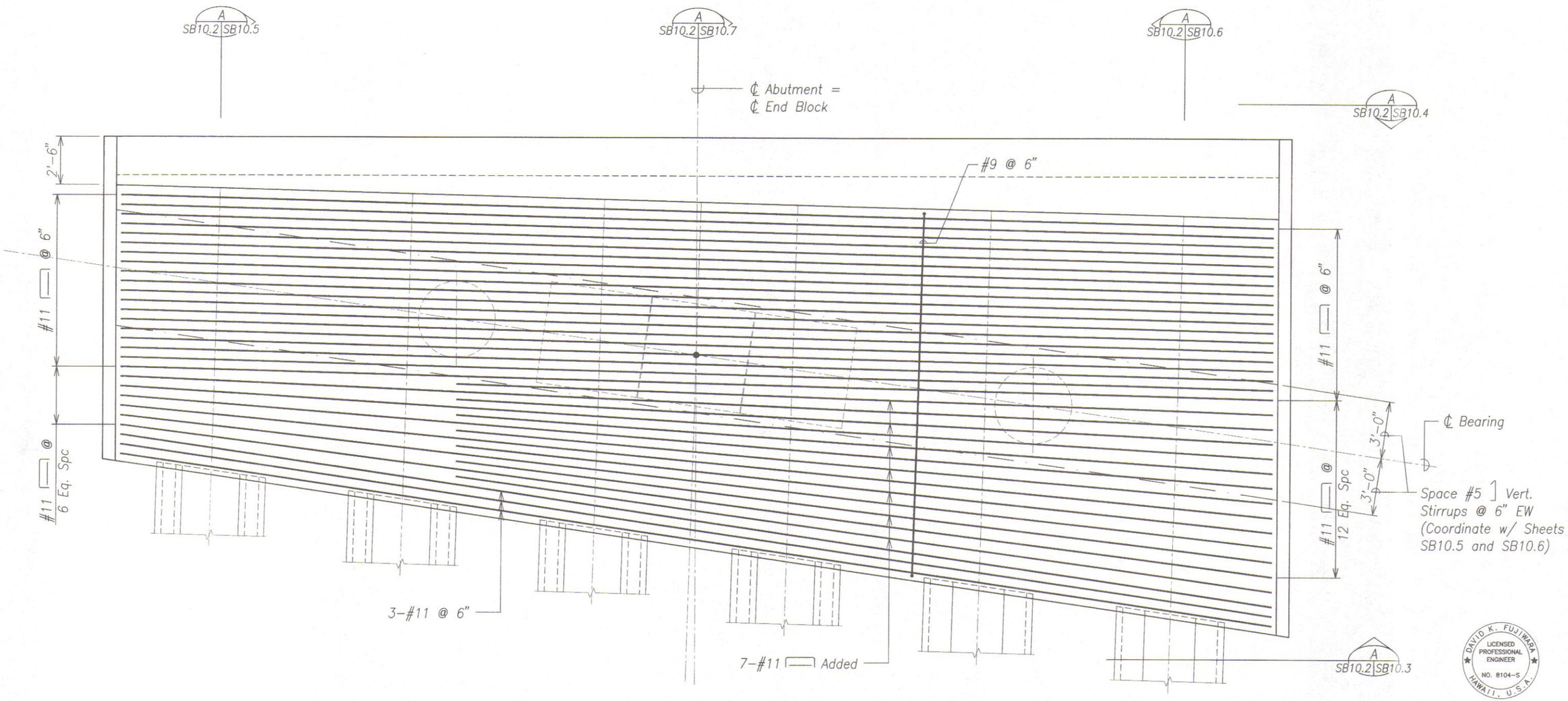

END BLOCK AT ABUTMENT 1 – REINFORCING

A
SB10.2 SB10.2

Scale: 3/8" = 1'-0"

DAVID K. FUJIWARA
LICENSED PROFESSIONAL ENGINEER
NO. 8104-S
HAWAII, U.S.A.

THIS WORK WAS PREPARED BY ME OR UNDER MY SUPERVISION.

KSF, INC. APRIL 30, 2012
LIC. EXP. DATE

STATE OF HAWAII
DEPARTMENT OF TRANSPORTATION
HIGHWAYS DIVISION

END BLOCK AT ABUTMENT 1
PLAN – REINFORCING LAYOUT
HONOAPIILANI HIGHWAY REALIGNMENT, PHASE 1A
Future Keawe St Extension to Lahainaluna Rd, Part B
Fed. Aid Proj. No. NH-030-1(35)R

Scale: As Noted Date: June, 2010

SHEET No. SB10.2 OF 10 SHEETS

FINAL DESIGN 336

ORIGINAL PLAN	SURVEY PLOTTED BY	DATE
	DRAWN BY	
NOTE BOOK	TRACED BY	
	DESIGNED BY	
No.	QUANTITIES BY	
	CHECKED BY	

DRAWING NAME: Z:\00 ONGOING\40019.0-HONOAPIILANI LAHAINA BYPASS-KAHOMA WO\06-15-10 COMBINE LAHAINA FINAL DESIGN\HH-SB1001.DWG PLOT TIME: 06-14-10, 8:15 PM)

FED. ROAD DIST. NO.	STATE	FED. AID PROJ. NO.	FISCAL YEAR	SHEET NO.	TOTAL SHEETS
HAWAII	HAW.	NH-030-1(35)R	2009	337	383

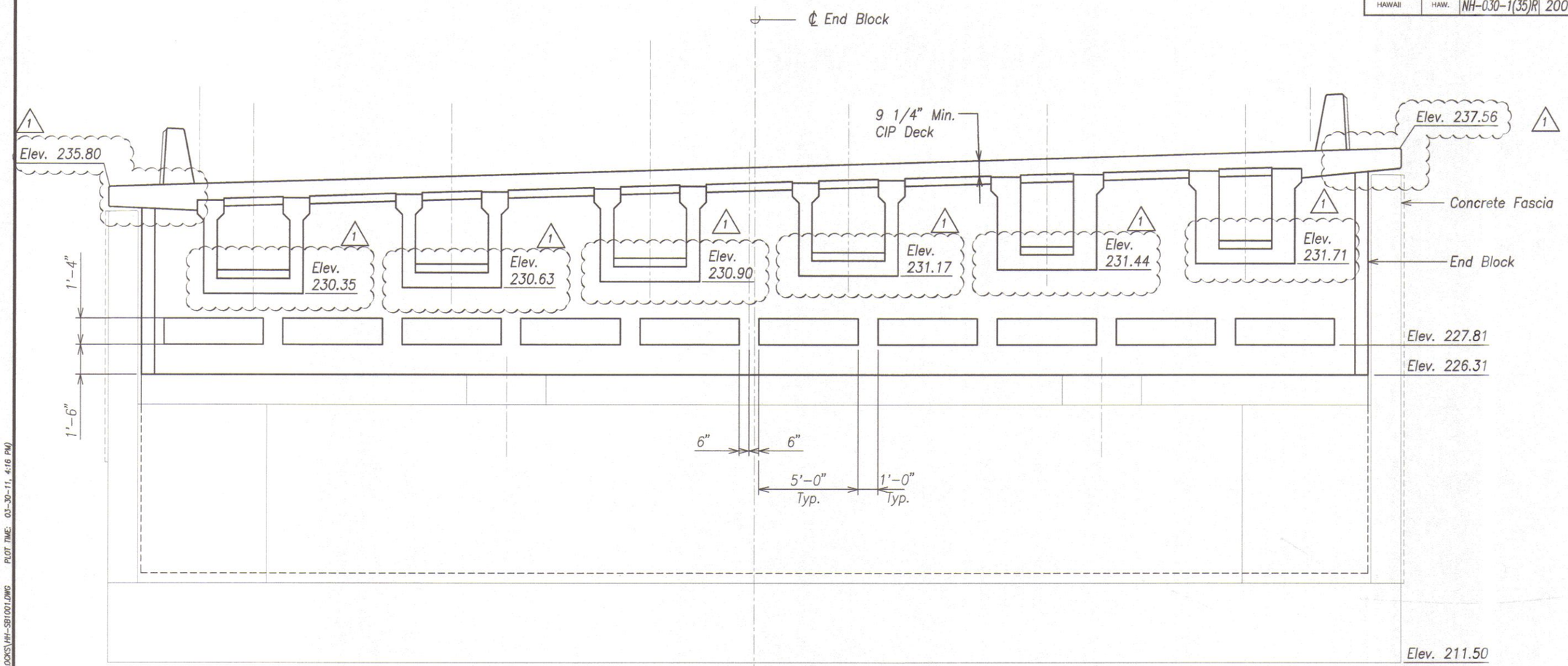

NOTES:

1. View shown is perpendicular to Girders and Precast Arch Tie Planks.
2. See Sheets SB11.10 and SB11.11 for similar reinforcing.

END BLOCK AT ABUTMENT 1 – FRONT ELEVATION

Scale: 3/8" = 1'-0"

A SB10.1 SB10.3

DAVID K. FUJIMASA LICENSED PROFESSIONAL ENGINEER NO. 8104-S HAWAII, U.S.A.

THIS WORK WAS PREPARED BY ME OR UNDER MY SUPERVISION.

KSF, INC. — APRIL 30, 2012 LIC. EXP. DATE

STATE OF HAWAII
DEPARTMENT OF TRANSPORTATION
HIGHWAYS DIVISION

END BLOCK AT ABUTMENT 1
FRONT ELEVATION

HONOAPIILANI HIGHWAY REALIGNMENT, PHASE 1A
Future Keawe St Extension to Lahainaluna Rd, Part B
Fed. Aid Proj. No. NH-030-1(35)R

Scale: As Noted — Date: June, 2010

SHEET No. SB10.3 OF 10 SHEETS

DATE	REVISION
2/01/11	1 Revisions

ORIGINAL PLAN — NOTE BOOK No. — SURVEY PLOTTED BY — DRAWN BY — TRACED BY — DESIGNED BY — QUANTITIES BY — CHECKED BY — DATE

DRAWING NAME: Z:\00 ONGOING\40019.0-HONOAPIILANI LAHAINA BYPASS-KAHOMA WO\03-30-11 EM END BLOCKS\HH-SB1001.DWG PLOT TIME: 03-30-11, 4:16 PM

FINAL DESIGN 337

FED. ROAD DIST. NO.	STATE	FED. AID PROJ. NO.	FISCAL YEAR	SHEET NO.	TOTAL SHEETS
HAWAII	HAW.	NH-030-1(35)R	2009	337	383

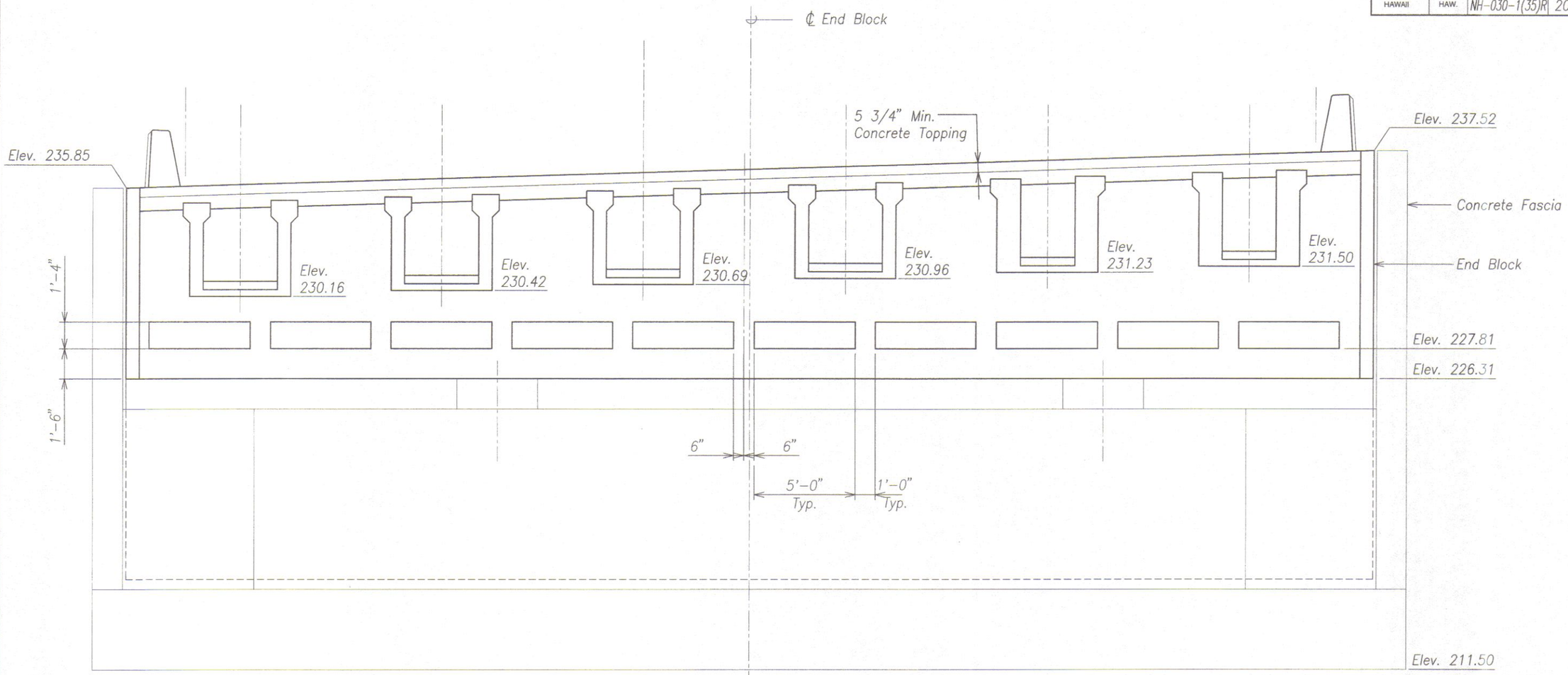

NOTES:

1. View shown is perpendicular to Girders and Precast Arch Tie Planks.
2. See Sheets SB11.10 and SB11.11 for similar reinforcing.

END BLOCK AT ABUTMENT 1 – FRONT ELEVATION

Scale: 3/8" = 1'-0"

A
SB10.1 SB10.3

DAVID K. FUJIWARA
LICENSED PROFESSIONAL ENGINEER
NO. 8104-S
HAWAII, U.S.A.

THIS WORK WAS PREPARED BY ME OR UNDER MY SUPERVISION.

KSF, INC. — APRIL 30, 2012 LIC. EXP. DATE

STATE OF HAWAII
DEPARTMENT OF TRANSPORTATION
HIGHWAYS DIVISION

END BLOCK AT ABUTMENT 1
FRONT ELEVATION

HONOAPIILANI HIGHWAY REALIGNMENT, PHASE 1A
Future Keawe St Extension to Lahainaluna Rd, Part B
Fed. Aid Proj. No. NH-030-1(35)R

Scale: As Noted — Date: June, 2010

SHEET No. SB10.3 OF 10 SHEETS

FINAL DESIGN ~~337~~ Rev.

ORIGINAL PLAN | SURVEY PLOTTED BY | DRAWN BY | TRACED BY | DESIGNED BY | QUANTITIES BY | CHECKED BY | DATE
NOTE BOOK No.

DRAWING NAME: Z:\00 ONGOING\40019.0-HONOAPIILANI LAHAINA BYPASS-KAHOMA WO\06-15-10 COMBINE LAHAINA FINAL DESIGN\HH-SB1001.DWG PLOT TIME: 06-14-10, 8:16 PM)

FED. ROAD DIST. NO.	STATE	FED. AID PROJ. NO.	FISCAL YEAR	SHEET NO.	TOTAL SHEETS
HAWAII	HAW.	NH-030-1(35)R	2009	338	383

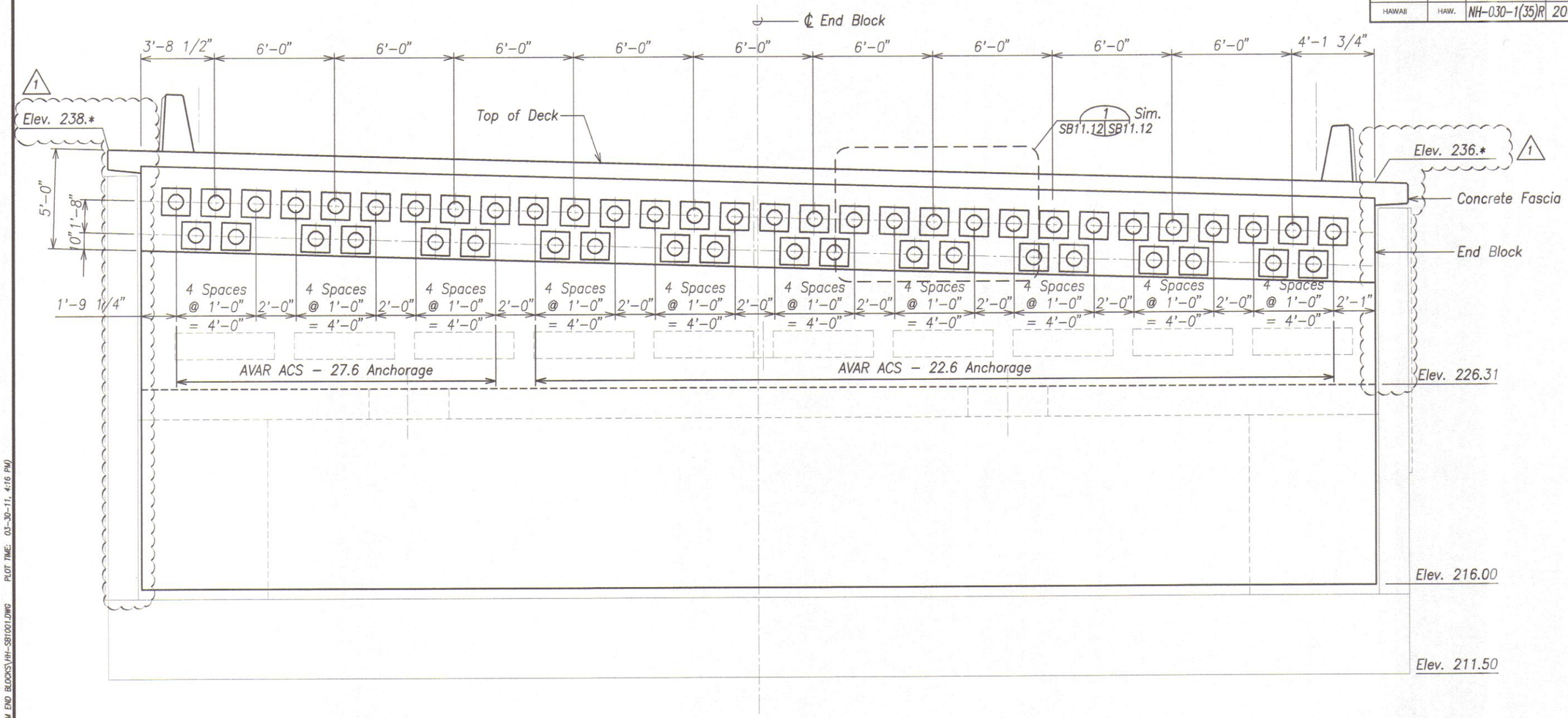

END BLOCK AT ABUTMENT 1 – BACK ELEVATION

A
SB10.1 SB10.4
SB10.2

Scale: 3/8" = 1'-0"

DAVID K. FUJIWARA
LICENSED PROFESSIONAL ENGINEER
NO. 8104-S
HAWAII, U.S.A.

THIS WORK WAS PREPARED BY ME OR UNDER MY SUPERVISION.

KSF, INC.

APRIL 30, 2012
LIC. EXP. DATE

STATE OF HAWAII
DEPARTMENT OF TRANSPORTATION
HIGHWAYS DIVISION

END BLOCK AT ABUTMENT 1
BACK ELEVATION

HONOAPIILANI HIGHWAY REALIGNMENT, PHASE 1A
Future Keawe St Extension to Lahainaluna Rd, Part B
Fed. Aid Proj. No. NH-030-1(35)R

Scale: As Noted Date: June, 2010

SHEET No. SB10.4 OF 10 SHEETS

DATE	REVISION
2/01/11	1 Revisions

ORIGINAL PLAN
NOTE BOOK No.
SURVEY PLOTTED BY
DRAWN BY
TRACED BY
DESIGNED BY
QUANTITIES BY
CHECKED BY
DATE

DRAWING NAME: Z:\00 ONGOING\40019.0-HONOAPIILANI LAHAINA BYPASS-KAHOMA WO\03-30-11 EM END BLOCKS\HH-SB1001.DWG PLOT TIME: 03-30-11, 4:16 PM)

FINAL DESIGN 338

FED. ROAD DIST. NO.	STATE	FED. AID PROJ. NO.	FISCAL YEAR	SHEET NO.	TOTAL SHEETS
HAWAII	HAW.	NH-030-1(35)R	2009	338	383

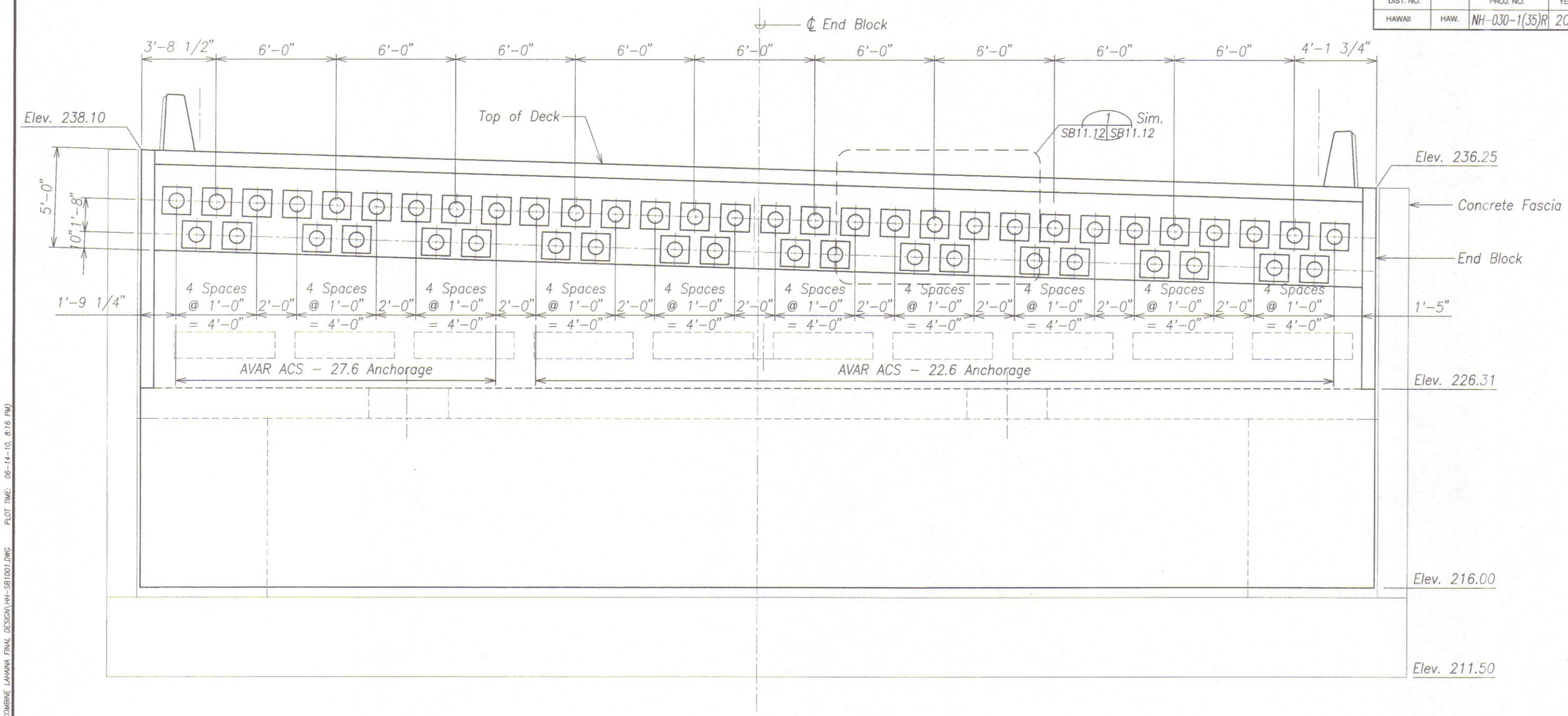

END BLOCK AT ABUTMENT 1 – BACK ELEVATION

Scale: 3/8" = 1'-0"

A
SB10.1 SB10.4
SB10.2

DAVID K. FUJIWARA
LICENSED PROFESSIONAL ENGINEER
NO. 8104-S
HAWAII, U.S.A.

THIS WORK WAS PREPARED BY ME OR UNDER MY SUPERVISION.

KSF, INC. — APRIL 30, 2012 LIC. EXP. DATE

STATE OF HAWAII
DEPARTMENT OF TRANSPORTATION
HIGHWAYS DIVISION

END BLOCK AT ABUTMENT 1
BACK ELEVATION

HONOAPIILANI HIGHWAY REALIGNMENT, PHASE 1A
Future Keawe St Extension to Lahainaluna Rd, Part B
Fed. Aid Proj. No. NH-030-1(35)R

Scale: As Noted — Date: June, 2010

SHEET No. SB10.4 OF 10 SHEETS

FINAL DESIGN ~~338~~ Rev.

ORIGINAL PLAN	SURVEY PLOTTED BY	DATE
	DRAWN BY	
NOTE BOOK	TRACED BY	
	DESIGNED BY	
	QUANTITIES BY	
No.	CHECKED BY	

DRAWING NAME: Z:\00 ONGOING\40019.0-HONOAPIILANI LAHAINA BYPASS-KAHOMA WO\06-15-10 COMBINE LAHAINA FINAL DESIGN\HH-SB1001.DWG PLOT TIME: 06-14-10, 8:16 PM)

FED. ROAD DIST. NO.	STATE	FED. AID PROJ. NO.	FISCAL YEAR	SHEET NO.	TOTAL SHEETS
HAWAII	HAW.	NH-030-1(35)R	2009	339	383

NOTES:

1. Rmin = 22' For 19-0.6" Strand Tendons
   24' For 22-0.6" Strand Tendons
   27' For 27-0.6" Strand Tendons
2. See Sheet SB10.2 for #5 HRC555 spacing @ ℄ Bearing.
3. See Sheet SB10.10A for #5 HRC555 splice.

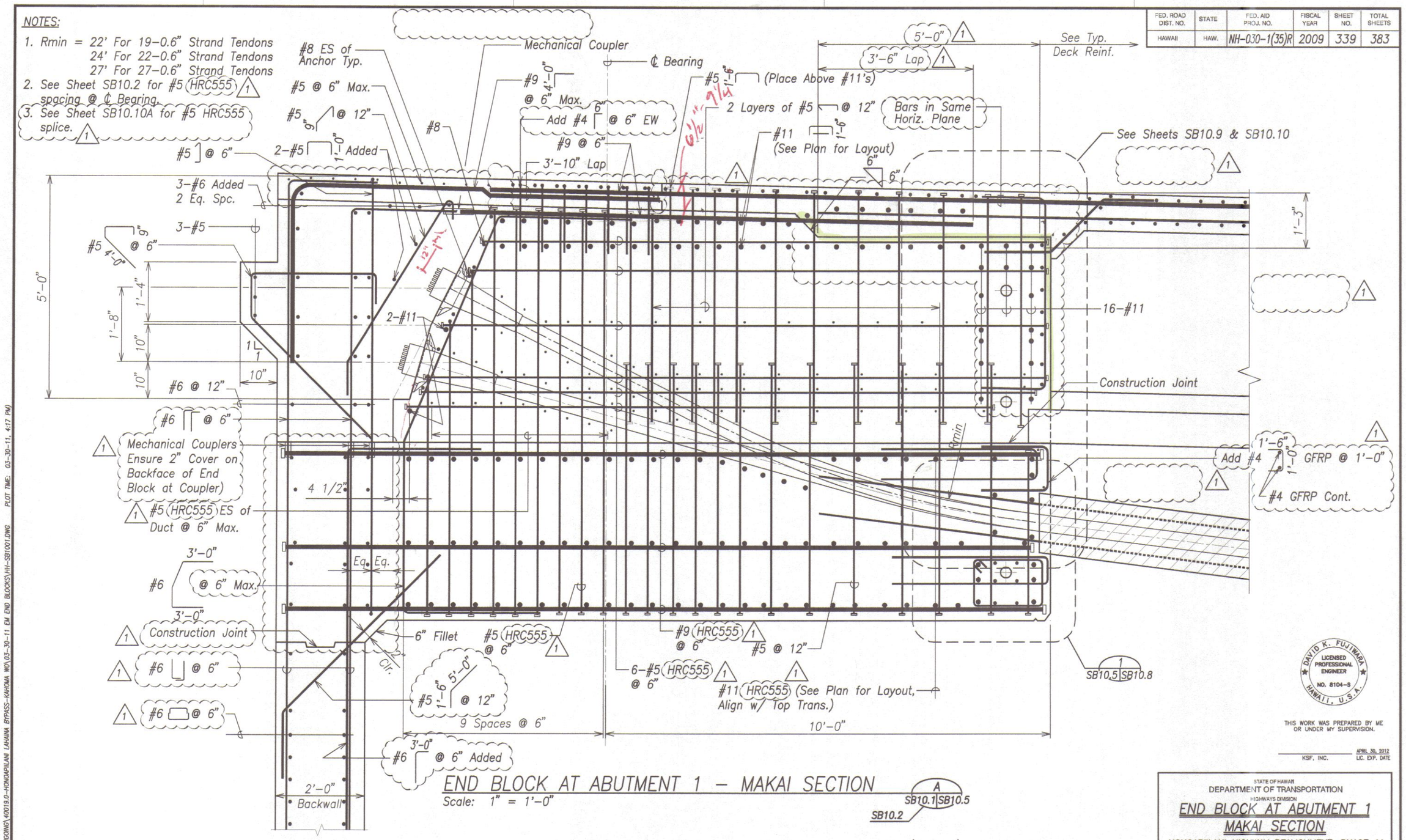

END BLOCK AT ABUTMENT 1 – MAKAI SECTION

Scale: 1" = 1'-0"

A SB10.1 SB10.5 SB10.2

DAVID K. FUJIWARA LICENSED PROFESSIONAL ENGINEER NO. 8104-S HAWAII, U.S.A.

THIS WORK WAS PREPARED BY ME OR UNDER MY SUPERVISION.

KSF, INC. — APRIL 30, 2012 LIC. EXP. DATE

DATE	REVISION
2/01/11	1 Revisions

STATE OF HAWAII
DEPARTMENT OF TRANSPORTATION
HIGHWAYS DIVISION

END BLOCK AT ABUTMENT 1
MAKAI SECTION

HONOAPIILANI HIGHWAY REALIGNMENT, PHASE 1A
Future Keawe St Extension to Lahainaluna Rd, Part B
Fed. Aid Proj. No. NH-030-1(35)R

Scale: As Noted — Date: June, 2010

SHEET No. SB10.5 OF 10 SHEETS

ORIGINAL PLAN — NOTE BOOK No. — SURVEY PLOTTED BY — DRAWN BY — TRACED BY — DESIGNED BY — QUANTITIES BY — CHECKED BY — DATE

DRAWING NAME: Z:\00 ONGOING\40019.0-HONOAPIILANI LAHAINA BYPASS-KAHOMA WO\03-30-11 EM END BLOCK(S)\HH-SB1001.DWG PLOT TIME: 03-30-11, 4:17 PM

FINAL DESIGN 339

FED. ROAD DIST. NO.	STATE	FED. AID PROJ. NO.	FISCAL YEAR	SHEET NO.	TOTAL SHEETS
HAWAII	HAW.	NH-030-1(35)R	2009	339	383

NOTES:

1. Rmin = 22' For 19-0.6" Strand Tendons
   24' For 22-0.6" Strand Tendons
   27' For 27-0.6" Strand Tendons
2. See Sheet SB10.2 for #5 ⌉ spacing @ ℄ Bearing.

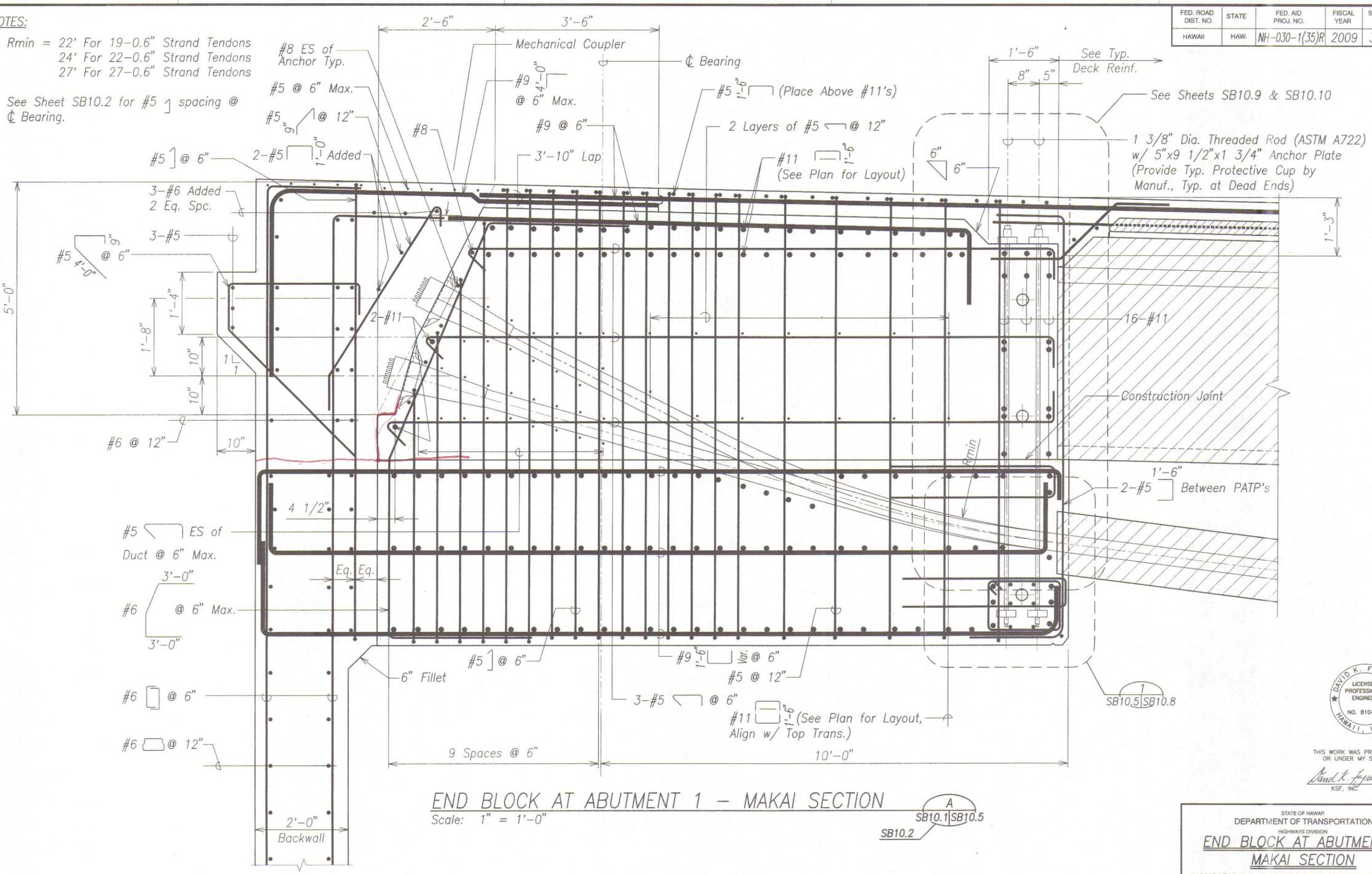

END BLOCK AT ABUTMENT 1 – MAKAI SECTION

Scale: 1" = 1'-0"

A SB10.1 SB10.5 SB10.2

DAVID K. FUJIWARA LICENSED PROFESSIONAL ENGINEER NO. 8104-S HAWAII, U.S.A.

THIS WORK WAS PREPARED BY ME OR UNDER MY SUPERVISION.

KSF, INC. APRIL 30, 2012 LIC. EXP. DATE

STATE OF HAWAII
DEPARTMENT OF TRANSPORTATION
HIGHWAYS DIVISION

END BLOCK AT ABUTMENT 1
MAKAI SECTION

HONOAPIILANI HIGHWAY REALIGNMENT, PHASE 1A
Future Keawe St Extension to Lahainaluna Rd, Part B
Fed. Aid Proj. No. NH-030-1(35)R

Scale: As Noted Date: June, 2010

SHEET No. SB10.5 OF 10 SHEETS

FINAL DESIGN ~~339~~ Rev.

ORIGINAL PLAN | SURVEY PLOTTED BY | DRAWN BY | TRACED BY | DESIGNED BY | QUANTITIES BY | CHECKED BY | DATE | NOTE BOOK No.

DRAWING NAME: Z:\00 ONGOING\40019.0-HONOAPIILANI LAHAINA BYPASS-KAHOMA WO\06-15-10 COMBINE LAHAINA FINAL DESIGN\HH-SB1001.DWG PLOT TIME: 06-14-10, 8:16 PM

FED. ROAD DIST. NO.	STATE	FED. AID PROJ. NO.	FISCAL YEAR	SHEET NO.	TOTAL SHEETS
HAWAII	HAW.	NH-030-1(35)R	2009	–	383

Notes:

1. See sheet SB13.1 for additional reinforcing in corbel.
2. #6 12" as shown on SB13.1 shall be epoxy coated.
3. Top cover in approach slab shall be 2 1/2".

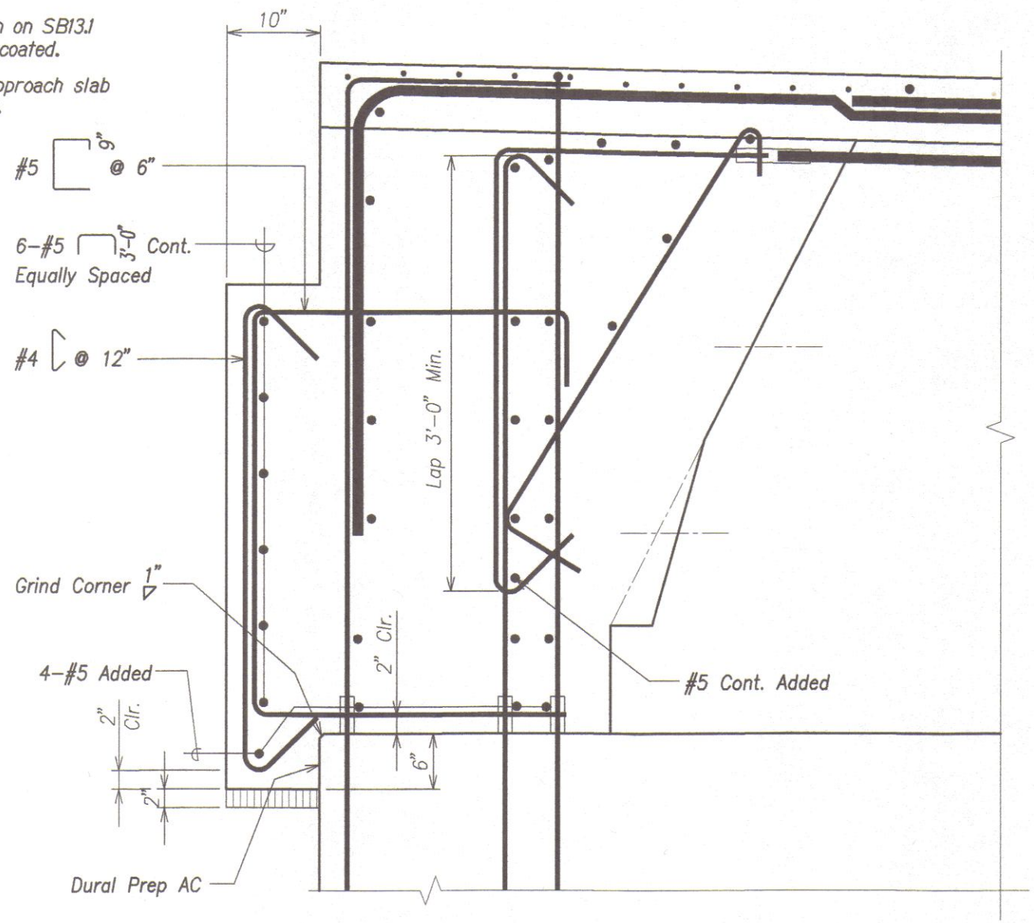

CORBEL REVISION AT ABUTMENT 1 (ABUTMENT 2 SIMILAR)

Scale: 1 1/2" = 1'-0"

A
SB10.5A | SB10.5A

DAVID K. FUJIWARA LICENSED PROFESSIONAL ENGINEER NO. 8104-S HAWAII, U.S.A.

THIS WORK WAS PREPARED BY ME OR UNDER MY SUPERVISION.

KSF, INC. — APRIL 30, 2012 LIC. EXP. DATE

STATE OF HAWAII
DEPARTMENT OF TRANSPORTATION
HIGHWAYS DIVISION

CORBEL REVISION AT ABUTMENT 1

HONOAPIILANI HIGHWAY REALIGNMENT, PHASE 1A
Future Keawe St Extension to Lahainaluna Rd, Part B
Fed. Aid Proj. No. NH-030-1(35)R

Scale: As Noted — Date: August, 2010

SHEET No. SB10.5A OF 10 SHEETS

DATE	REVISION
10/1/12	1 New sheet

ORIGINAL PLAN — SURVEY PLOTTED BY ____ DATE; DRAWN BY ____; TRACED BY ____; DESIGNED BY ____; QUANTITIES BY ____; CHECKED BY ____; NOTE BOOK No. ____

DRAWING NAME: Z:\00 ONGOING\40019.0-HONOAPIILANI LAHAINA BYPASS-KAHOMA - HDCC\10-01-12 REV ENDBLOCK\HH-SB1001.DWG PLOT TIME: 10-01-12, 11:36 AM

ADR FINAL DESIGN -

FED. ROAD DIST. NO.	STATE	FED. AID PROJ. NO.	FISCAL YEAR	SHEET NO.	TOTAL SHEETS
HAWAII	HAW.	NH-030-1(35)R	2009	340	383

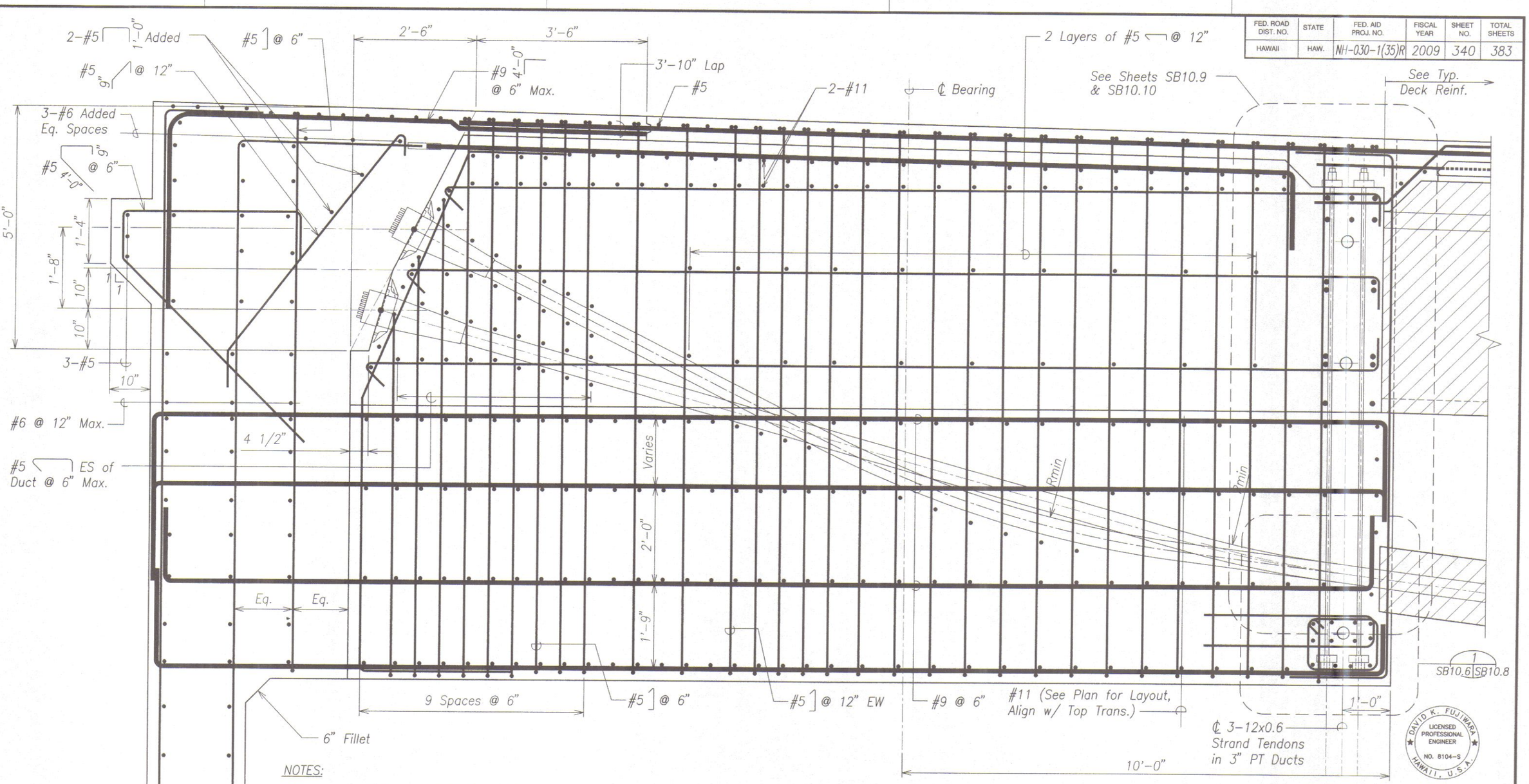

NOTES:

1. Rmin = 22' For 19-0.6" Strand Tendons
   24' For 22-0.6" Strand Tendons
   27' For 27-0.6" Strand Tendons
2. See Sheet SB10.2 for #5 spacing @ ℄ Bearing.
3. See Sheet SB10.5 for additional information.

END BLOCK AT ABUTMENT 1 – MAUKA SECTION

Scale: 1" = 1'-0"

A SB10.1 SB10.6

SB10.1B

THIS WORK WAS PREPARED BY ME OR UNDER MY SUPERVISION.

KSF, INC. APRIL 30, 2012 LIC. EXP. DATE

STATE OF HAWAII
DEPARTMENT OF TRANSPORTATION
HIGHWAYS DIVISION

END BLOCK AT ABUTMENT 1
MAUKA SECTION
HONOAPIILANI HIGHWAY REALIGNMENT, PHASE 1A
Future Keawe St Extension to Lahainaluna Rd, Part B
Fed. Aid Proj. No. NH-030-1(35)R

Scale: As Noted Date: June, 2010

SHEET No. SB10.6 OF 10 SHEETS

ORIGINAL PLAN | SURVEY PLOTTED BY | DRAWN BY | TRACED BY | DESIGNED BY | QUANTITIES BY | CHECKED BY | DATE
NOTE BOOK No.

DRAWING NAME: Z:\00 ONGOING\40019.0-HONOAPIILANI LAHAINA BYPASS-KAHOMA WO\06-15-10 COMBINE LAHAINA FINAL DESIGN\HH-SB1001.DWG PLOT TIME: 06-14-10, 8:16 PM

FINAL DESIGN 340

FED. ROAD DIST. NO.	STATE	FED. AID PROJ. NO.	FISCAL YEAR	SHEET NO.	TOTAL SHEETS
HAWAII	HAW.	NH-030-1(35)R	2009	341	383

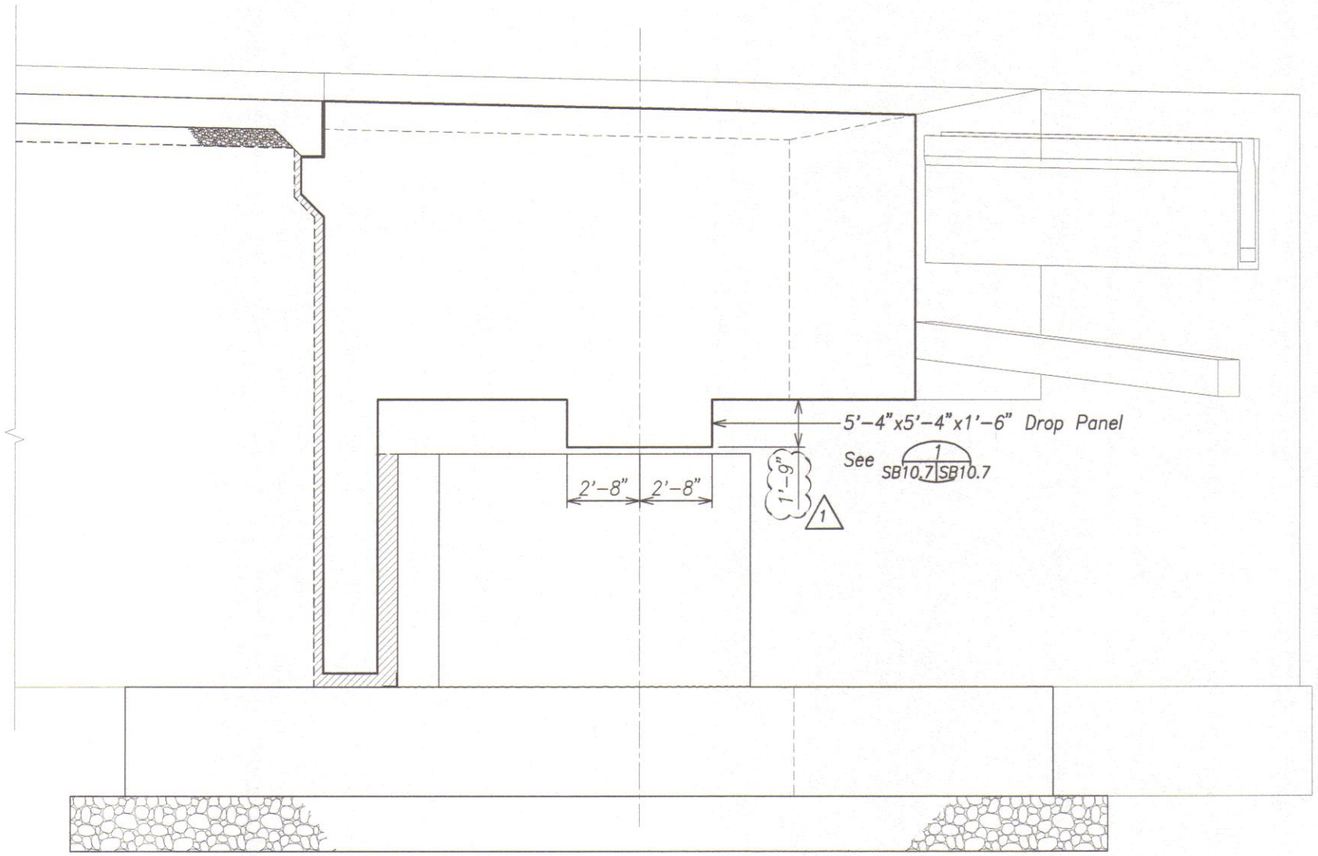

END BLOCK AT ABUTMENT 1 – SECTION AT DROP PANEL A SB10.1 SB10.7
Scale: 3/8" = 1'-0"
SB10.2

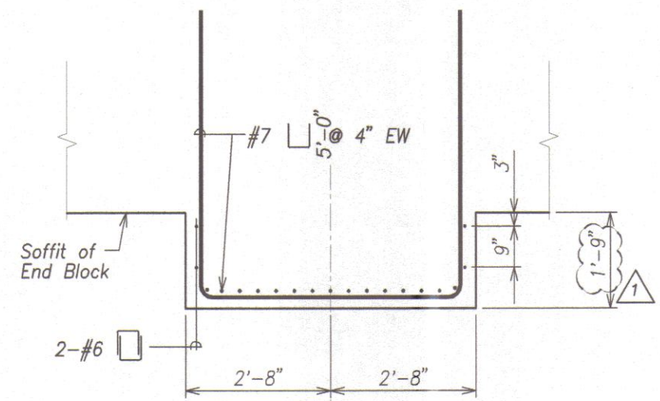

DROP PANEL 1
Scale: 3/4" = 1'-0" SB10.7 SB10.7

DAVID K. FUJIWARA LICENSED PROFESSIONAL ENGINEER NO. 8104-S HAWAII, U.S.A.

THIS WORK WAS PREPARED BY ME OR UNDER MY SUPERVISION.

KSF, INC. — APRIL 30, 2012 LIC. EXP. DATE

STATE OF HAWAII
DEPARTMENT OF TRANSPORTATION
HIGHWAYS DIVISION

END BLOCK AT ABUTMENT 1
SECTION AT DROP PANEL
HONOAPIILANI HIGHWAY REALIGNMENT, PHASE 1A
Future Keawe St Extension to Lahainaluna Rd, Part B
Fed. Aid Proj. No. NH-030-1(35)R

Scale: As Noted — Date: June, 2010

SHEET No. SB10.7 OF 10 SHEETS

DATE	REVISION
2/01/11	1 Revisions

ORIGINAL PLAN — NOTE BOOK No. — SURVEY PLOTTED BY — DRAWN BY — TRACED BY — DESIGNED BY — QUANTITIES BY — CHECKED BY — DATE

DRAWING NAME: Z:\00 ONGOING\40019.0-HONOAPIILANI LAHAINA BYPASS-KAHOMA WO\03-30-11 EM END BLOCKS\HH-SB1001.DWG PLOT TIME: 03-30-11, 4:17 PM

FED. ROAD DIST. NO.	STATE	FED. AID PROJ. NO.	FISCAL YEAR	SHEET NO.	TOTAL SHEETS
HAWAII	HAW.	NH-030-1(35)R	2009	341	383

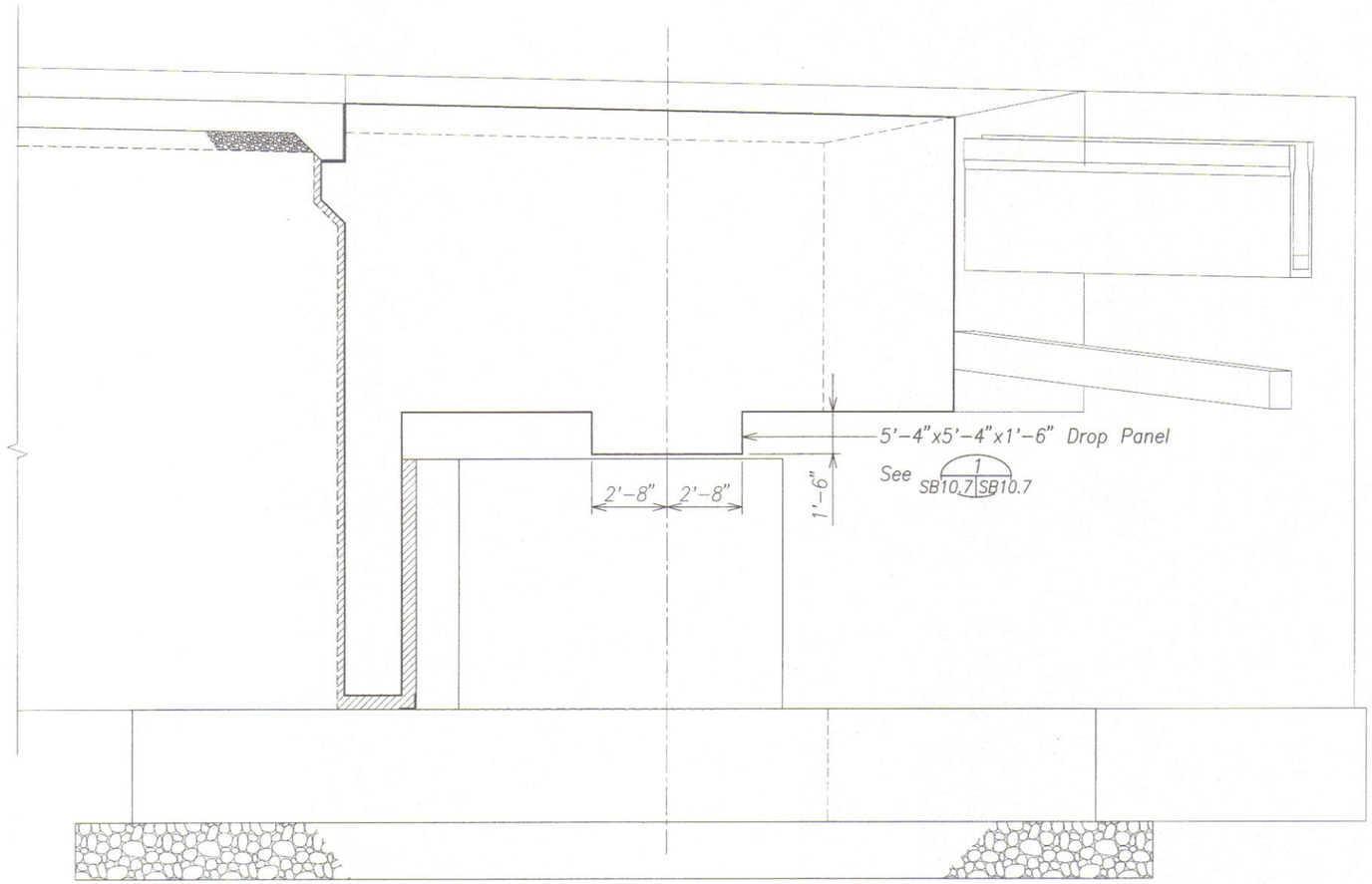

END BLOCK AT ABUTMENT 1 – SECTION AT DROP PANEL A SB10.1 SB10.7
Scale: 3/8" = 1'-0"
SB10.2

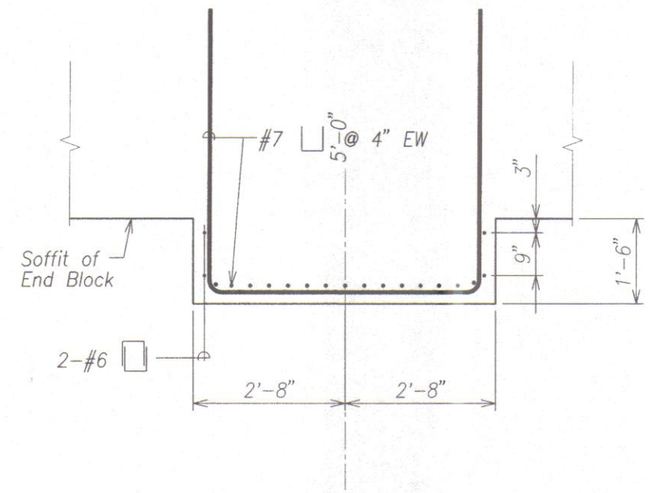

DROP PANEL 1 SB10.7 SB10.7
Scale: 3/4" = 1'-0"

DAVID K. FUJIWARA
LICENSED PROFESSIONAL ENGINEER
NO. 8104-S
HAWAII, U.S.A.

THIS WORK WAS PREPARED BY ME OR UNDER MY SUPERVISION.

KSF, INC. APRIL 30, 2012 LIC. EXP. DATE

STATE OF HAWAII
DEPARTMENT OF TRANSPORTATION
HIGHWAYS DIVISION

END BLOCK AT ABUTMENT 1
SECTION AT DROP PANEL
HONOAPIILANI HIGHWAY REALIGNMENT, PHASE 1A
Future Keawe St Extension to Lahainaluna Rd, Part B
Fed. Aid Proj. No. NH-030-1(35)R

Scale: As Noted Date: June, 2010

SHEET No. SB10.7 OF 10 SHEETS

FINAL DESIGN ~~341~~ Rev.

ORIGINAL PLAN	SURVEY PLOTTED BY	DATE
	DRAWN BY	
NOTE BOOK	TRACED BY	
	DESIGNED BY	
No.	QUANTITIES BY	
	CHECKED BY	

DRAWING NAME: Z:\00 ONGOING\40019.0-HONOAPIILANI LAHAINA BYPASS-KAHOMA WC\06-15-10 COMBINE LAHAINA FINAL DESIGN\HH-SB1001.DWG PLOT TIME: 06-14-10, 8:16 PM

FED. ROAD DIST. NO.	STATE	FED. AID PROJ. NO.	FISCAL YEAR	SHEET NO.	TOTAL SHEETS
HAWAII	HAW.	NH-030-1(35)R	2009	342	383

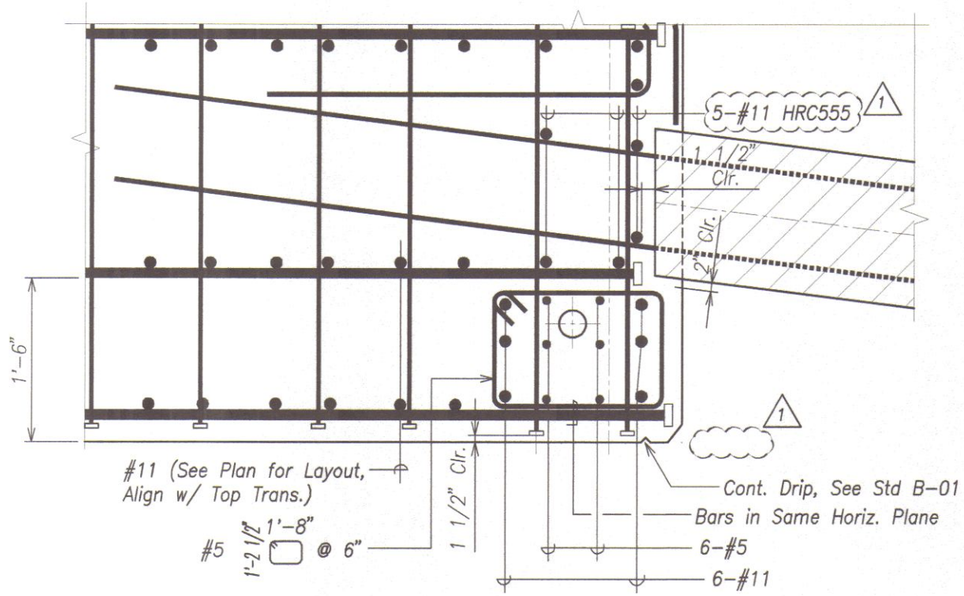

END BLOCK DETAIL

Scale: 1 1/2" = 1'-0"

1 SB10.5 | SB10.8

SB10.6

DRAWING NAME: Z:\00 ONGOING\40013.0-HONOAPIILANI LAHAINA BYPASS-KAHOMA WO\03-30-11 EM END BLOCKS\HH-SB1001.DWG PLOT TIME: 03-30-11, 4:18 PM

ORIGINAL PLAN	SURVEY PLOTTED BY	DATE
	DRAWN BY	
	TRACED BY	
NOTE BOOK	DESIGNED BY	
	QUANTITIES BY	
No.	CHECKED BY	

DATE	REVISION
3/30/11	1 Revisions

DAVID K. FUJIWARA LICENSED PROFESSIONAL ENGINEER NO. 8104-S HAWAII, U.S.A.

THIS WORK WAS PREPARED BY ME OR UNDER MY SUPERVISION.

KSF, INC. — APRIL 30, 2012 LIC. EXP. DATE

STATE OF HAWAII
DEPARTMENT OF TRANSPORTATION
HIGHWAYS DIVISION

END BLOCK DETAIL

HONOAPIILANI HIGHWAY REALIGNMENT, PHASE 1A
Future Keawe St Extension to Lahainaluna Rd, Part B
Fed. Aid Proj. No. NH-030-1(35)R

Scale: As Noted — Date: June, 2010

SHEET No. SB10.8 OF 10 SHEETS

FINAL DESIGN 342

FED. ROAD DIST. NO.	STATE	FED. AID PROJ. NO.	FISCAL YEAR	SHEET NO.	TOTAL SHEETS
HAWAII	HAW.	NH-030-1(35)R	2009	342	383

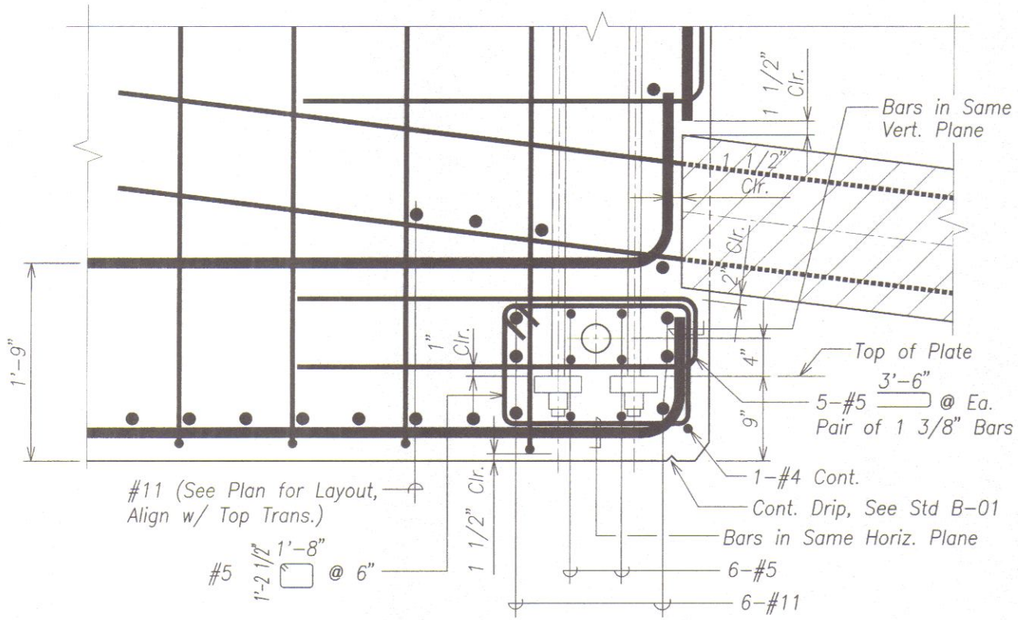

END BLOCK DETAIL

Scale: 1 1/2" = 1'-0"

1 SB10.5 SB10.8

SB10.6

ORIGINAL PLAN	SURVEY PLOTTED BY	DATE
	DRAWN BY	"
NOTE BOOK	TRACED BY	"
	DESIGNED BY	"
	QUANTITIES BY	"
No.	CHECKED BY	"

DRAWING NAME: Z:\00 ONGOING\40019.0-HONOAPIILANI LAHAINA BYPASS-KAHOMA WO\06-15-10 COMBINE LAHAINA FINAL DESIGN\HH-SB1001.DWG PLOT TIME: 06-14-10, 8:17 PM)

DAVID K. FUJIWARA LICENSED PROFESSIONAL ENGINEER NO. 8104-S HAWAII, U.S.A.

THIS WORK WAS PREPARED BY ME OR UNDER MY SUPERVISION.

KSF, INC. APRIL 30, 2012 LIC. EXP. DATE

STATE OF HAWAII
DEPARTMENT OF TRANSPORTATION
HIGHWAYS DIVISION

END BLOCK DETAIL

HONOAPIILANI HIGHWAY REALIGNMENT, PHASE 1A
Future Keawe St Extension to Lahainaluna Rd, Part B
Fed. Aid Proj. No. NH-030-1(35)R

Scale: As Noted Date: June, 2010

SHEET No. SB10.8 OF 10 SHEETS

FINAL DESIGN ~~342~~ Rev.

FED. ROAD DIST. NO.	STATE	FED. AID PROJ. NO.	FISCAL YEAR	SHEET NO.	TOTAL SHEETS
HAWAII	HAW.	NH-030-1(35)R	2009	343	383

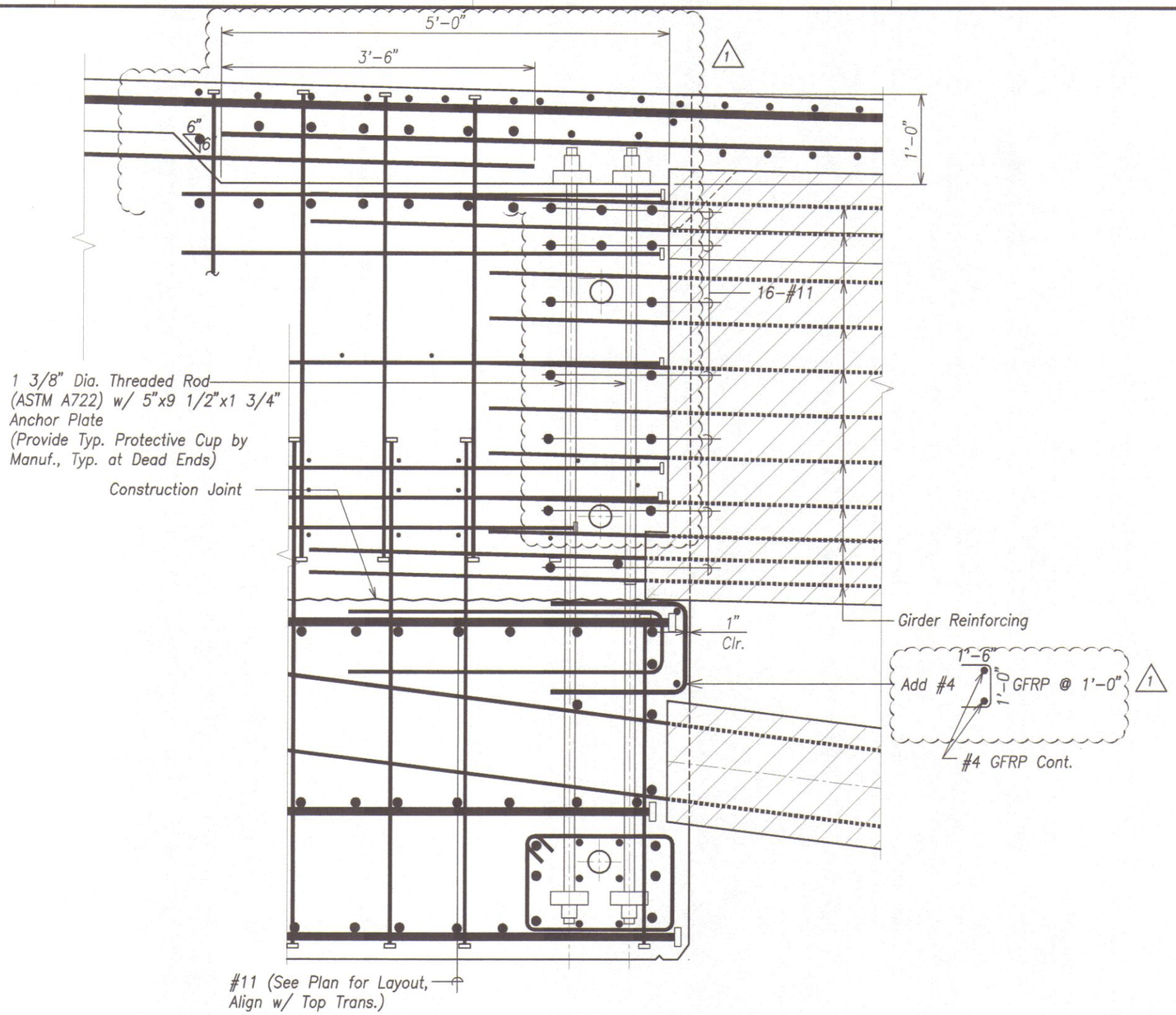

END BLOCK DETAIL AT GIRDER STEM

Scale: 1 1/2" = 1'-0"

A
SB10.5 SB10.9
SB10.6

DAVID K. FUJIWARA
LICENSED PROFESSIONAL ENGINEER
NO. 8104-S
HAWAII, U.S.A.

THIS WORK WAS PREPARED BY ME OR UNDER MY SUPERVISION.

KSF, INC. — APRIL 30, 2012 LIC. EXP. DATE

STATE OF HAWAII
DEPARTMENT OF TRANSPORTATION
HIGHWAYS DIVISION

END BLOCK DETAIL

HONOAPIILANI HIGHWAY REALIGNMENT, PHASE 1A
Future Keawe St Extension to Lahainaluna Rd, Part B
Fed. Aid Proj. No. NH-030-1(35)R

Scale: As Noted — Date: June, 2010

SHEET No. SB10.9 OF 10 SHEETS

DATE	REVISION
2/01/11	1 Revisions

ORIGINAL PLAN — NOTE BOOK No. — SURVEY PLOTTED BY — SURVEY BY — TRACED BY — DESIGNED BY — QUANTITIES BY — CHECKED BY — DATE

DRAWING NAME: Z:\00 ONGOING\40019.0-HONOAPIILANI LAHAINA BYPASS-KAHOMA WO\03-30-11 EM END BLOCKS\HH-SB1001.DWG PLOT TIME: 03-31-11, 11:56 AM

FINAL DESIGN 343

FED. ROAD DIST. NO.	STATE	FED. AID PROJ. NO.	FISCAL YEAR	SHEET NO.	TOTAL SHEETS
HAWAII	HAW.	NH-030-1(35)R	2009	343	383

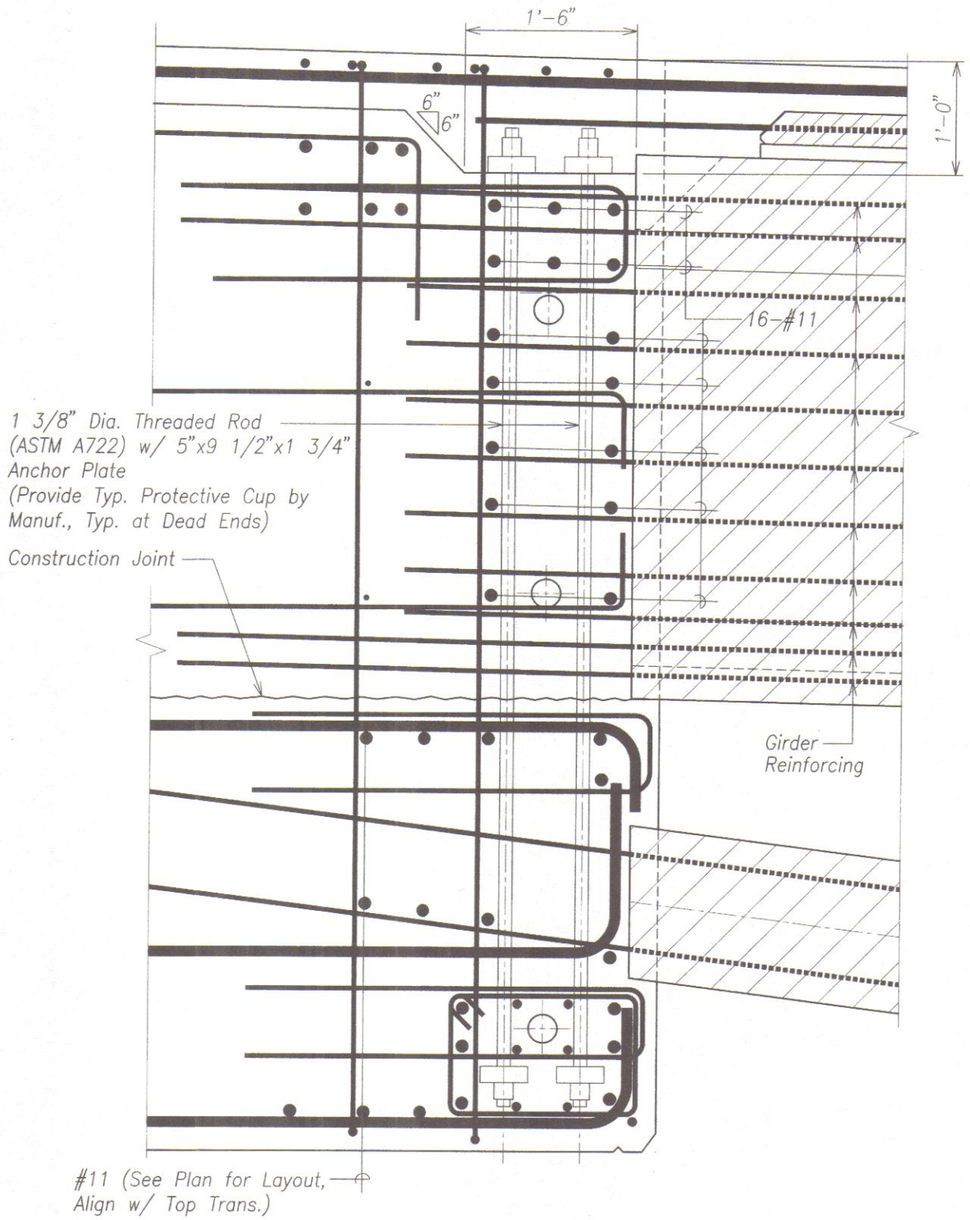

END BLOCK DETAIL AT GIRDER STEM

Scale: 1 1/2" = 1'-0"

A
SB10.5 | SB10.9
SB10.6

DAVID K. FUJIWARA
LICENSED PROFESSIONAL ENGINEER
NO. 8104-S
HAWAII, U.S.A.

THIS WORK WAS PREPARED BY ME OR UNDER MY SUPERVISION.

KSF, INC. — APRIL 30, 2012 LIC. EXP. DATE

STATE OF HAWAII
DEPARTMENT OF TRANSPORTATION
HIGHWAYS DIVISION

END BLOCK DETAIL

HONOAPIILANI HIGHWAY REALIGNMENT, PHASE 1A
Future Keawe St Extension to Lahainaluna Rd, Part B
Fed. Aid Proj. No. NH-030-1(35)R

Scale: As Noted — Date: June, 2010

SHEET No. SB10.9 OF 10 SHEETS

FINAL DESIGN 343

ORIGINAL PLAN — SURVEY PLOTTED BY — DRAWN BY — TRACED BY — DESIGNED BY — QUANTITIES BY — CHECKED BY — DATE
NOTE BOOK No.

DRAWING NAME: Z:\00 ONGOING\40019.0-HONOAPIILANI LAHAINA BYPASS-KAHOMA WO\06-15-10 COMBINE LAHAINA FINAL DESIGN\HH-SB1001.DWG PLOT TIME: 06-14-10, 8:17 PM)

FED. ROAD DIST. NO.	STATE	FED. AID PROJ. NO.	FISCAL YEAR	SHEET NO.	TOTAL SHEETS
HAWAII	HAW.	NH-030-1(35)R	2009	344	383

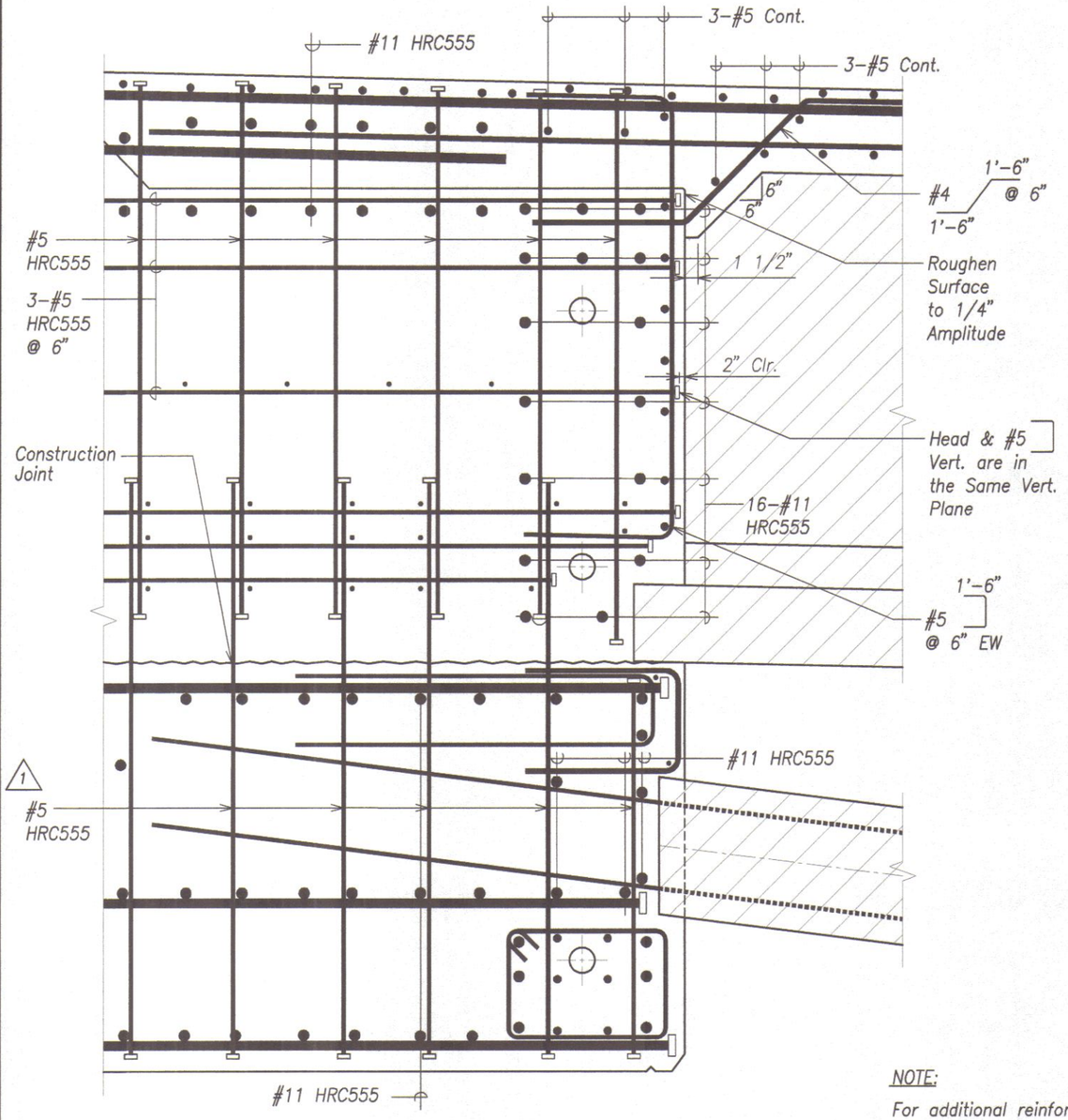

1 AT TUB GIRDER BETWEEN STEMS (A: SB10.5 | SB10.10; SB10.6)
Scale: 1 1/2" = 1'-0"

NOTE:

For additional reinforcing at AVAR 12.6 Tendon Anchors, See Sheet SB11.6.

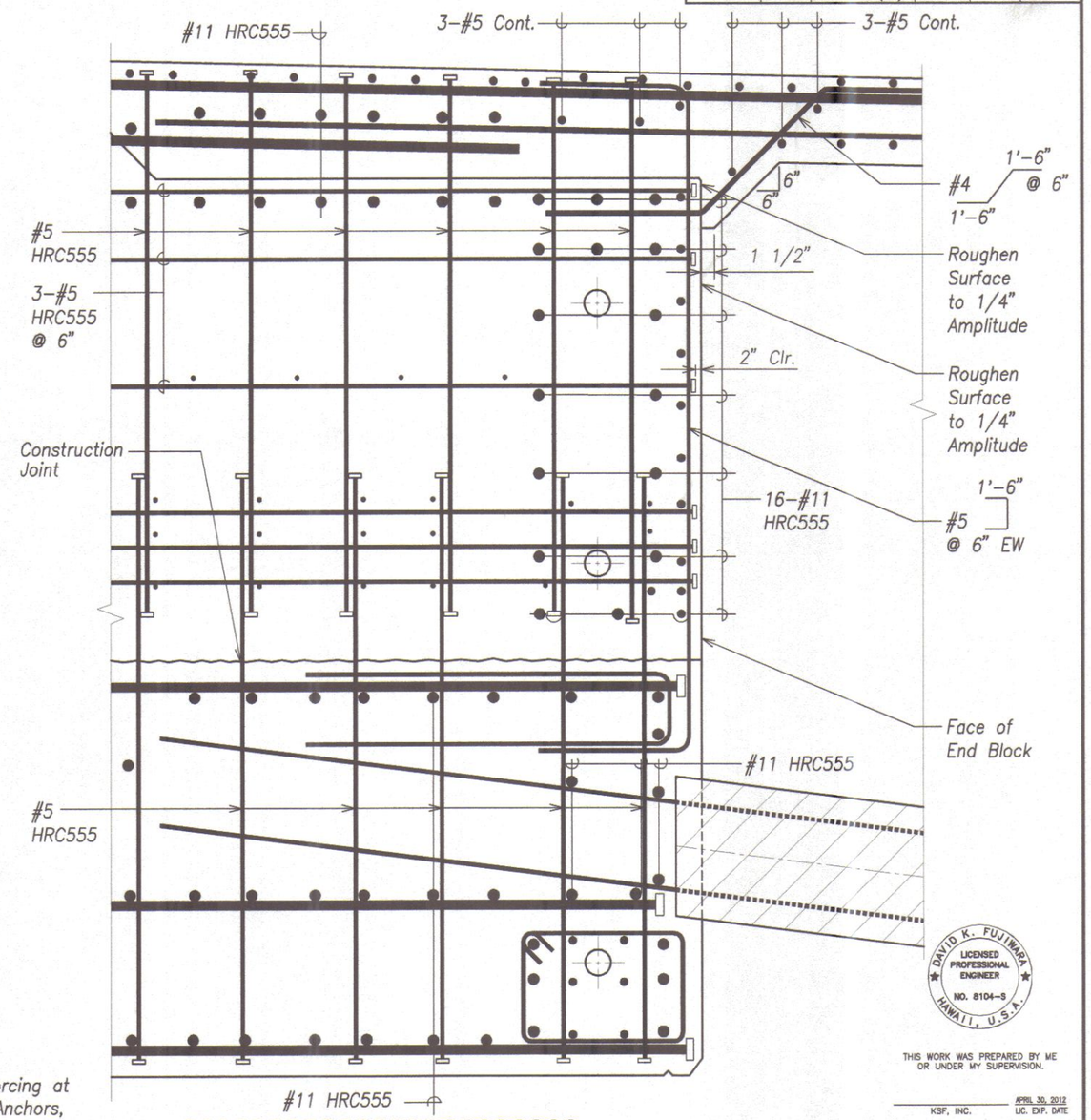

1 BETWEEN TUBS (B: SB10.10 | SB10.10)
Scale: 1 1/2" = 1'-0"

DAVID K. FUJIMARA LICENSED PROFESSIONAL ENGINEER NO. 8104-S HAWAII, U.S.A.

THIS WORK WAS PREPARED BY ME OR UNDER MY SUPERVISION.

KSF, INC. — APRIL 30, 2012 LIC. EXP. DATE

DATE	REVISION
2/01/11	1 Revisions

STATE OF HAWAII
DEPARTMENT OF TRANSPORTATION
HIGHWAYS DIVISION

END BLOCK DETAIL

HONOAPIILANI HIGHWAY REALIGNMENT, PHASE 1A
Future Keawe St Extension to Lahainaluna Rd, Part B
Fed. Aid Proj. No. NH-030-1(35)R

Scale: As Noted — Date: June, 2010

SHEET No. SB10.10 OF 10 SHEETS

ORIGINAL PLAN — SURVEY PLOTTED BY / DRAWN BY / TRACED BY / DESIGNED BY / QUANTITIES BY / CHECKED BY / DATE
NOTE BOOK No.

DRAWING NAME: Z:\00_ONGOING\40019.0-HONOAPIILANI LAHAINA BYPASS-KAHOMA WO\03-30-11_EM END BLOCKS\HH-SB1001.DWG PLOT TIME: 03-30-11, 4:19 PM

FINAL DESIGN 344

FED. ROAD DIST. NO.	STATE	FED. AID PROJ. NO.	FISCAL YEAR	SHEET NO.	TOTAL SHEETS
HAWAII	HAW.	NH-030-1(35)R	2009	344	383

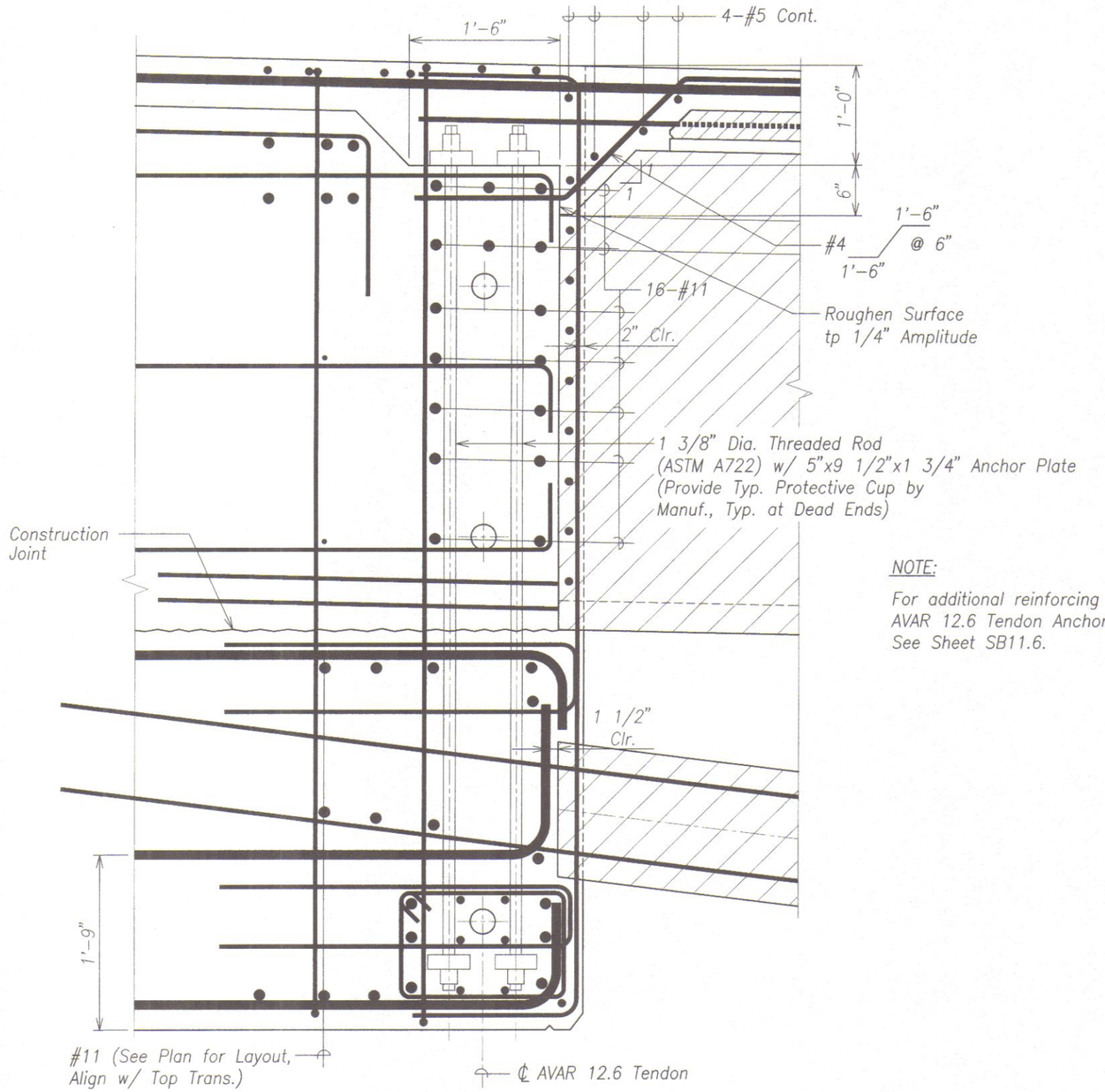

NOTE:

For additional reinforcing at AVAR 12.6 Tendon Anchors, See Sheet SB11.6.

END BLOCK DETAIL BETWEEN GIRDERS

Scale: 1 1/2" = 1'-0"

A
SB10.5 SB10.10
SB10.6

THIS WORK WAS PREPARED BY ME OR UNDER MY SUPERVISION.

KSF, INC. APRIL 30, 2012 LIC. EXP. DATE

STATE OF HAWAII
DEPARTMENT OF TRANSPORTATION
HIGHWAYS DIVISION

END BLOCK DETAIL

HONOAPIILANI HIGHWAY REALIGNMENT, PHASE 1A
Future Keawe St Extension to Lahainaluna Rd, Part B
Fed. Aid Proj. No. NH-030-1(35)R

Scale: As Noted Date: June, 2010

SHEET No. SB10.10 OF 10 SHEETS

FINAL DESIGN ~~344~~ Rev.

ORIGINAL PLAN | SURVEY PLOTTED BY | DRAWN BY | TRACED BY | DESIGNED BY | QUANTITIES BY | CHECKED BY | DATE
NOTE BOOK No.

DRAWING NAME: Z:\00 ONGOING\40019.0-HONOAPIILANI LAHAINA BYPASS-KAHOMA WO\06-15-10 COMBINE LAHAINA FINAL DESIGN\HH-SB1001.DWG PLOT TIME: 06-14-10, 8:17 PM)

FED. ROAD DIST. NO.	STATE	FED. AID PROJ. NO.	FISCAL YEAR	SHEET NO.	TOTAL SHEETS
HAWAII	HAW.	NH-030-1(35)R	2009	344S-1	383

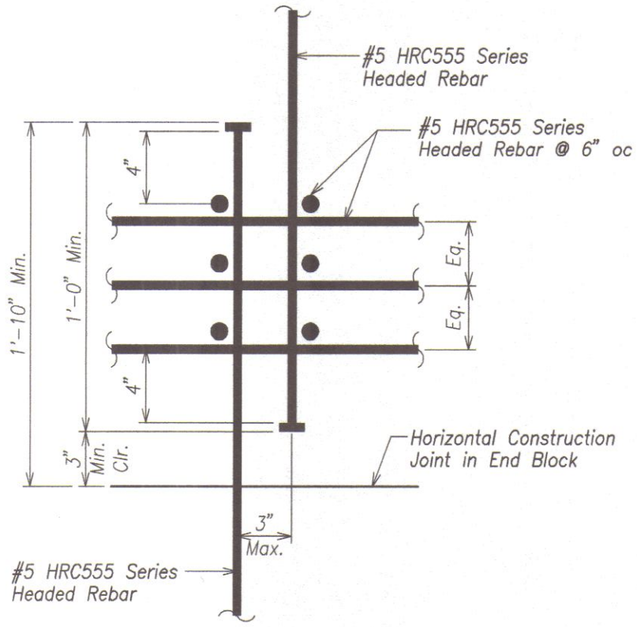

TYPICAL LAP SPLICE @
END BLOCK CONSTRUCTION JOINT (A) SB10.10A | SB10.10A

Scale: 3" = 1'-0"

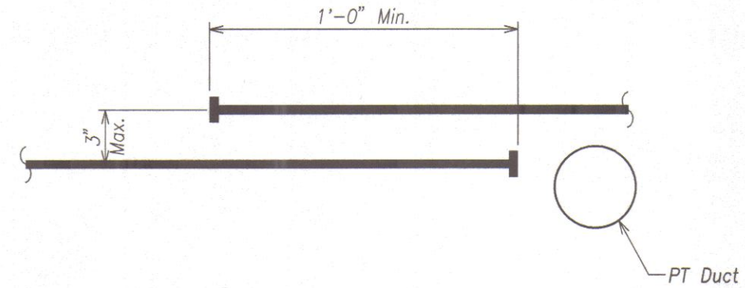

DETAIL OF #5 HEADED BAR @ PT DUCT (B) SB10.10A | SB10.10A

Scale: 3" = 1'-0"

DAVID K. FUJIMARA
LICENSED PROFESSIONAL ENGINEER
NO. 8104-S
HAWAII, U.S.A.

THIS WORK WAS PREPARED BY ME OR UNDER MY SUPERVISION.

KSF, INC. — APRIL 30, 2012 LIC. EXP. DATE

STATE OF HAWAII
DEPARTMENT OF TRANSPORTATION
HIGHWAYS DIVISION

#5 HEADED REBAR DETAILS

HONOAPIILANI HIGHWAY REALIGNMENT, PHASE 1A
Future Keawe St Extension to Lahainaluna Rd, Part B
Fed. Aid Proj. No. NH-030-1(35)R

Scale: As Noted — Date: June, 2010

SHEET No. SB10.10A OF 10 SHEETS

DATE	REVISION
2/01/11	1 New Sheet

ORIGINAL PLAN	SURVEY PLOTTED BY	DATE
	DRAWN BY	"
NOTE BOOK	TRACED BY	"
	DESIGNED BY	"
No.	QUANTITIES BY	"
	CHECKED BY	"

DRAWING NAME: Z:\00 ONGOING\40015.0-HONOAPIILANI LAHAINA BYPASS-KAHOMA WO\03-30-11 EM END BLOCKS\HH-SB1001.DWG PLOT TIME: 03-30-11, 4:19 PM

FINAL DESIGN 344S-1

FED. ROAD DIST. NO.	STATE	FED. AID PROJ. NO.	FISCAL YEAR	SHEET NO.	TOTAL SHEETS
HAWAII	HAW.	NH-030-1(35)R	2009	344S-2	383

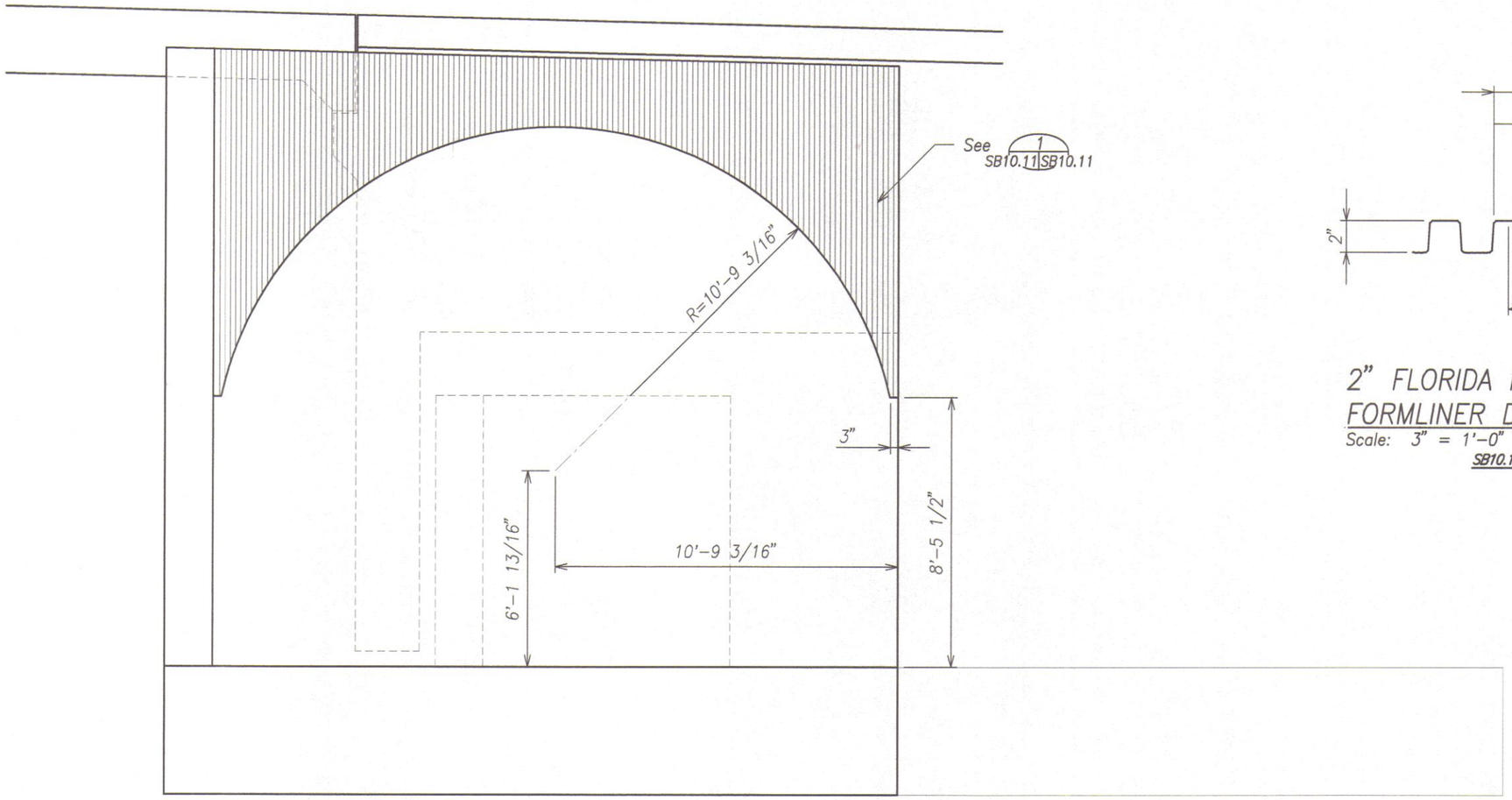

FASCIA WALL ABUTMENT 1 – MAKAI SIDE (A SB8.4 SB10.11)
Scale: 1/2" = 1'-0"

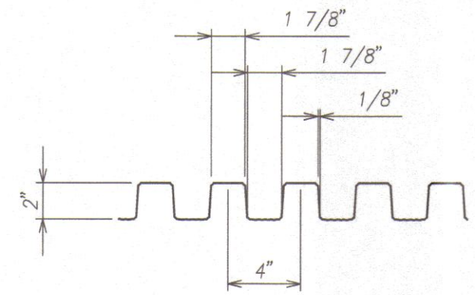

2" FLORIDA FIN REVEAL FORMLINER DETAIL (1 SB10.11 SB10.11)
Scale: 3" = 1'-0"
SB10.12, SB11.12, SB11.13

DAVID K. FUJIMARA LICENSED PROFESSIONAL ENGINEER NO. 8104-S HAWAII, U.S.A.

THIS WORK WAS PREPARED BY ME OR UNDER MY SUPERVISION.

KSF, INC. — APRIL 30, 2012 LIC. EXP. DATE

STATE OF HAWAII
DEPARTMENT OF TRANSPORTATION
HIGHWAYS DIVISION

ABUTMENT 1
FASCIA WALL – MAKAI SIDE
HONOAPIILANI HIGHWAY REALIGNMENT, PHASE 1A
Future Keawe St Extension to Lahainaluna Rd, Part B
Fed. Aid Proj. No. NH-030-1(35)R

Scale: As Noted — Date: June, 2010

SHEET No. SB10.11 OF 6 SHEETS

DATE	REVISION

ORIGINAL PLAN — SURVEY PLOTTED BY ____ DATE; DRAWN BY ____; TRACED BY ____; DESIGNED BY ____; QUANTITIES BY ____; CHECKED BY ____; NOTE BOOK No. ____

DRAWING NAME: Z:\00 ONGOING\40019.0-HONOAPIILANI LAHAINA BYPASS-KAHOMA WD\03-30-11 EM END BLOCKS\HH-SB1011.DWG PLOT TIME: 03-30-11, 4:20 PM

FINAL DESIGN 344S-2

FED. ROAD DIST. NO.	STATE	FED. AID PROJ. NO.	FISCAL YEAR	SHEET NO.	TOTAL SHEETS
HAWAII	HAW.	NH-030-1(35)R	2009	344S-3	383

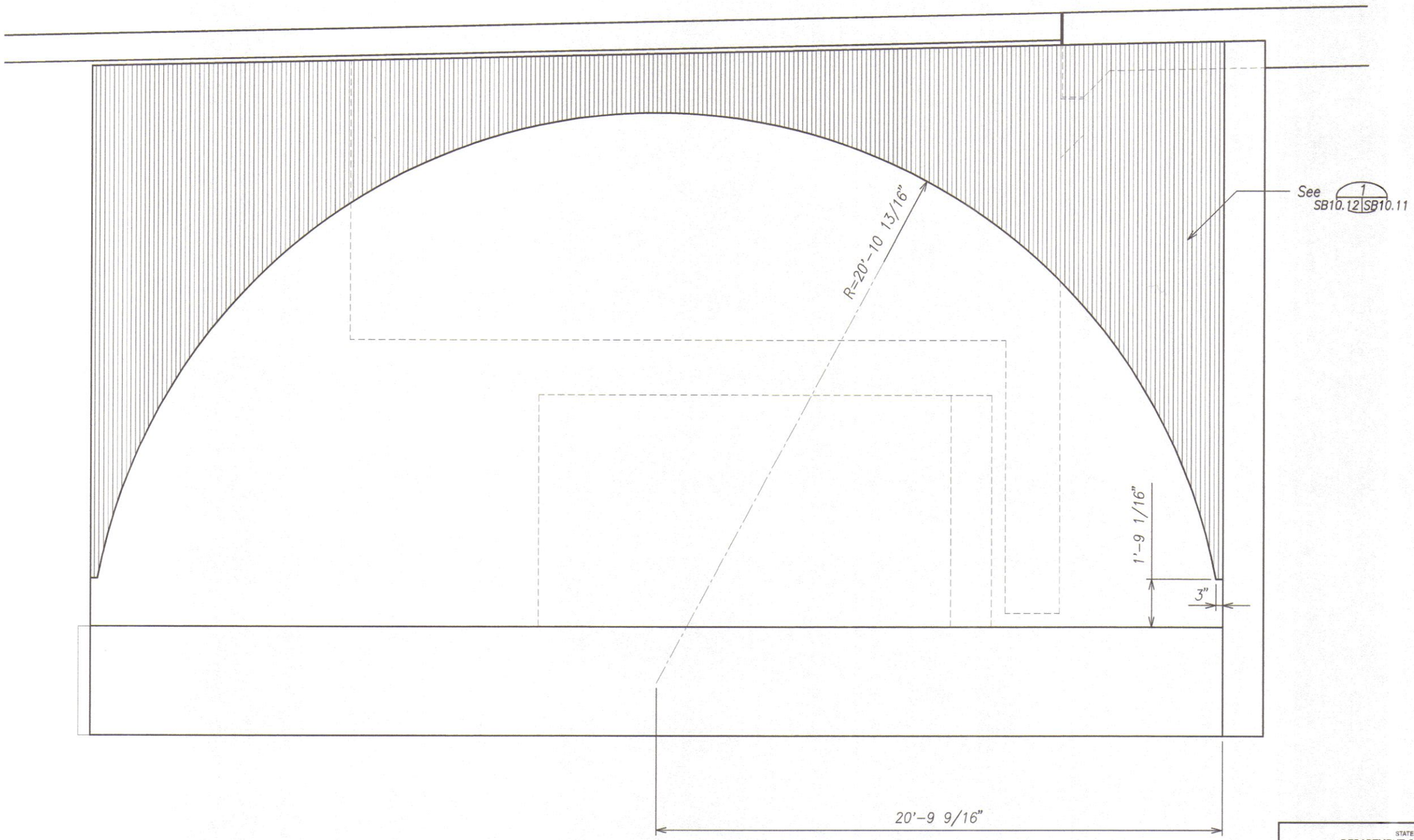

FASCIA WALL ABUTMENT 1 – MAUKA SIDE A SB8.4 SB10.12

Scale: 1/2" = 1'-0"

DRAWING NAME: Z:\00 ONGOING\40019.0-HONOAPIILANI LAHAINA BYPASS-KAHONA WO\03-30-11 EM END BLOCKS\HH-SB1011.DWG PLOT TIME: 03-30-11, 4:21 PM

ORIGINAL PLAN	SURVEY PLOTTED BY	DATE
	DRAWN BY	
NOTE BOOK	TRACED BY	
	DESIGNED BY	
No.	QUANTITIES BY	
	CHECKED BY	

DAVID K. FUJIMARA LICENSED PROFESSIONAL ENGINEER NO. 8104-S HAWAII, U.S.A.

THIS WORK WAS PREPARED BY ME OR UNDER MY SUPERVISION.

KSF, INC. — APRIL 30, 2012 LIC. EXP. DATE

STATE OF HAWAII
DEPARTMENT OF TRANSPORTATION
HIGHWAYS DIVISION

ABUTMENT 1
FASCIA WALL – MAUKA SIDE
HONOAPIILANI HIGHWAY REALIGNMENT, PHASE 1A
Future Keawe St Extension to Lahainaluna Rd, Part B
Fed. Aid Proj. No. NH-030-1(35)R

Scale: As Noted — Date: June, 2010

SHEET No. SB10.12 OF 6 SHEETS

DATE	REVISION

FINAL DESIGN 344S-3

FED. ROAD DIST. NO.	STATE	FED. AID PROJ. NO.	FISCAL YEAR	SHEET NO.	TOTAL SHEETS
HAWAII	HAW.	NH-030-1(35)R	2009	345	383

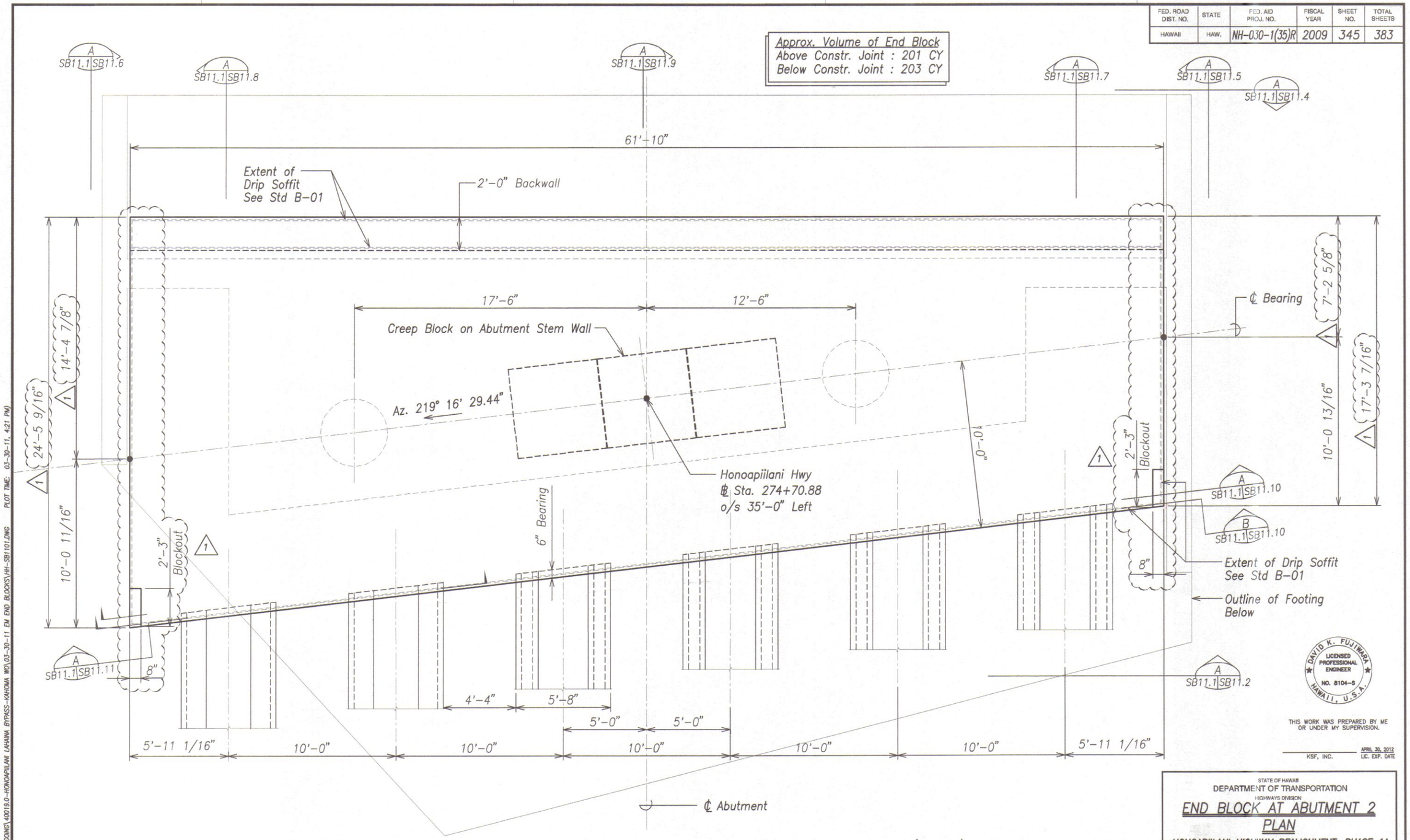

END BLOCK AT ABUTMENT 2 – PLAN

A SB11.1 SB11.1

Scale: 3/8" = 1'-0"

DAVID K. FUJIWARA LICENSED PROFESSIONAL ENGINEER NO. 8104-S HAWAII, U.S.A.

THIS WORK WAS PREPARED BY ME OR UNDER MY SUPERVISION.

KSF, INC. — APRIL 30, 2012 LIC. EXP. DATE

DATE	REVISION
2/01/11	1 Revisions

STATE OF HAWAII
DEPARTMENT OF TRANSPORTATION
HIGHWAYS DIVISION

END BLOCK AT ABUTMENT 2 PLAN

HONOAPIILANI HIGHWAY REALIGNMENT, PHASE 1A

Future Keawe St Extension to Lahainaluna Rd, Part B

Fed. Aid Proj. No. NH-030-1(35)R

Scale: As Noted — Date: June, 2010

SHEET No. SB11.1 OF 11 SHEETS

ORIGINAL PLAN — SURVEY PLOTTED BY / DRAWN BY / TRACED BY / DESIGNED BY / QUANTITIES BY / CHECKED BY — DATE — NOTE BOOK No.

DRAWING NAME: Z:\00 ONGOING\40019.0-HONOAPIILANI LAHAINA BYPASS-KAHOMA WO\03-30-11 EW END BLOCKS\HH-SB1101.DWG PLOT TIME: 03-30-11, 4:21 PM

FINAL DESIGN 345

FED. ROAD DIST. NO.	STATE	FED. AID PROJ. NO.	FISCAL YEAR	SHEET NO.	TOTAL SHEETS
HAWAII	HAW.	NH-030-1(35)R	2009	345	383

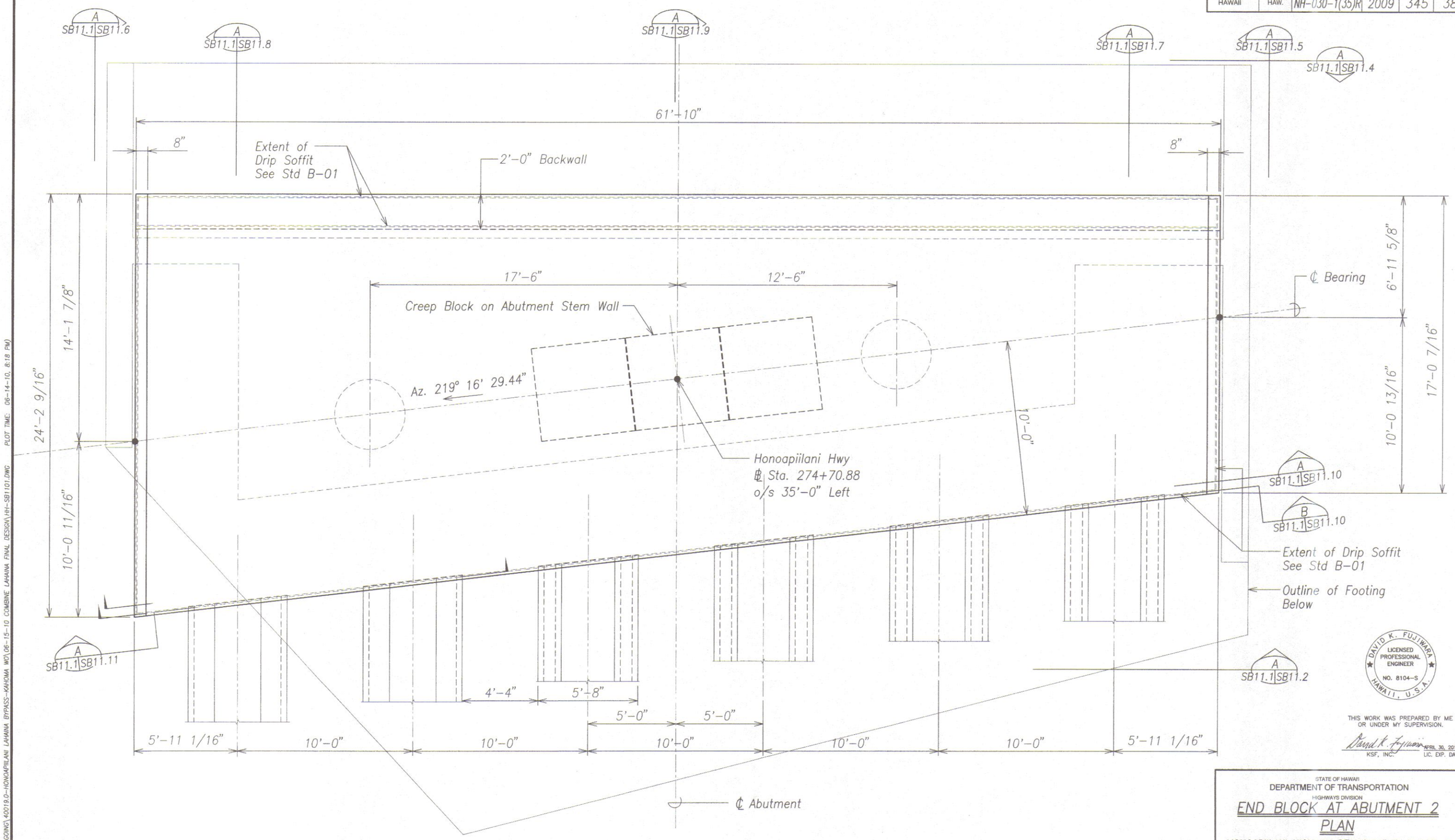

END BLOCK AT ABUTMENT 2 – PLAN (A SB11.1 SB11.1)

Scale: 3/8" = 1'-0"

DAVID K. FUJIWARA LICENSED PROFESSIONAL ENGINEER NO. 8104-S HAWAII, U.S.A.

THIS WORK WAS PREPARED BY ME OR UNDER MY SUPERVISION.

David K. Fujiwara APRIL 30, 2012

KSF, INC. LIC. EXP. DATE

STATE OF HAWAII
DEPARTMENT OF TRANSPORTATION
HIGHWAYS DIVISION

END BLOCK AT ABUTMENT 2
PLAN

HONOAPIILANI HIGHWAY REALIGNMENT, PHASE 1A
Future Keawe St Extension to Lahainaluna Rd, Part B
Fed. Aid Proj. No. NH-030-1(35)R

Scale: As Noted Date: June, 2010

SHEET No. SB11.1 OF 11 SHEETS

ORIGINAL PLAN	SURVEY PLOTTED BY	DATE
	DRAWN BY	
NOTE BOOK	TRACED BY	
	DESIGNED BY	
	QUANTITIES BY	
No.	CHECKED BY	

DRAWING NAME: Z:\00 ONGOING\40019.0-HONOAPIILANI LAHAINA BYPASS-KAHOMA WO\06-15-10 COMBINE LAHAINA FINAL DESIGN\HH-SB1101.DWG PLOT TIME: 06-14-10, 8:18 PM)

FINAL DESIGN ~~345~~ 344

FED. ROAD DIST. NO.	STATE	FED. AID PROJ. NO.	FISCAL YEAR	SHEET NO.	TOTAL SHEETS
HAWAII	HAW.	NH-030-1(35)R	2009	346	383

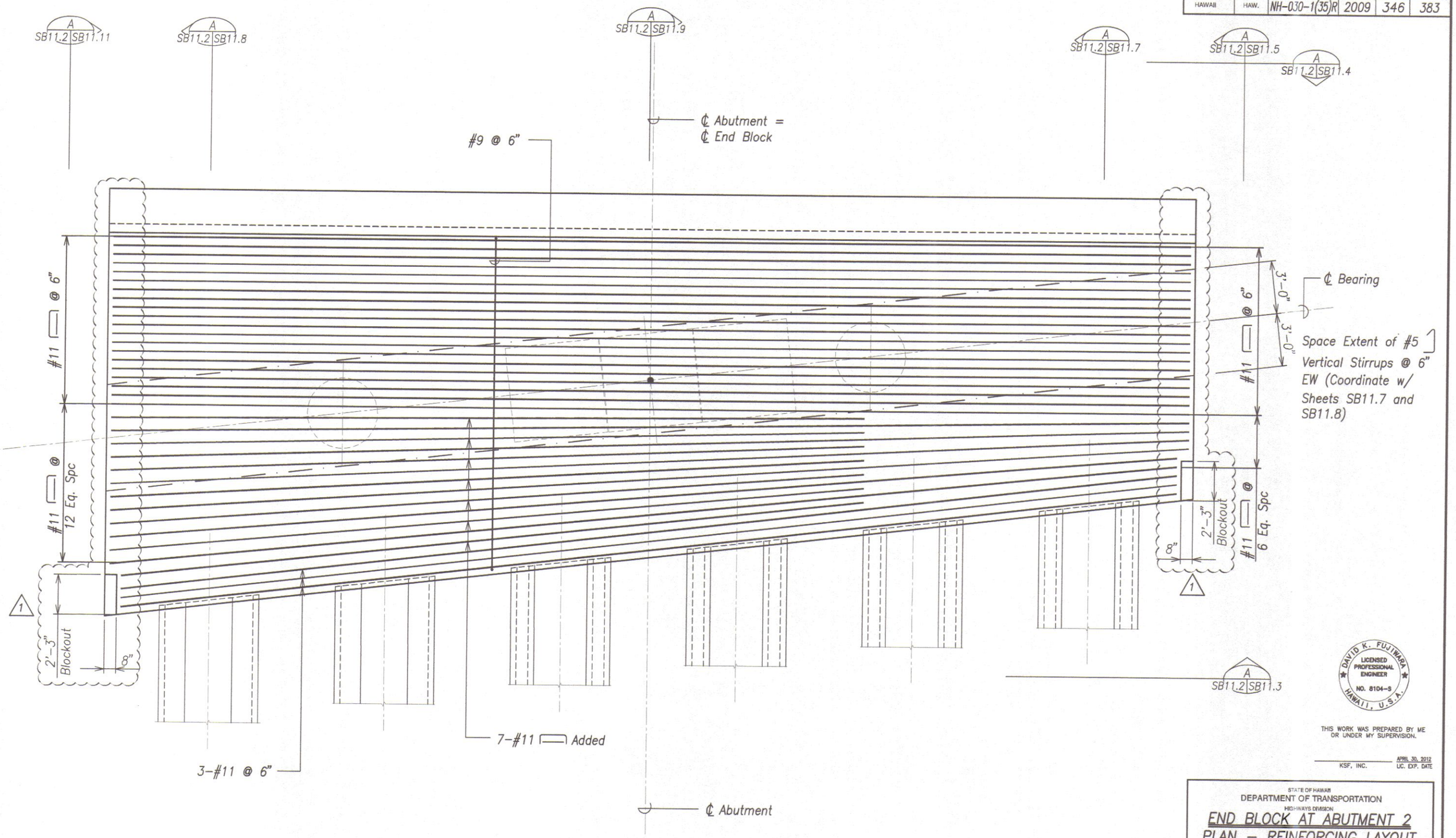

END BLOCK AT ABUTMENT 2 – REINFORCING (A SB11.2 SB11.2)

Scale: 3/8" = 1'-0"

DATE	REVISION
2/01/11	1 Revisions

DAVID K. FUJIMARA LICENSED PROFESSIONAL ENGINEER NO. 8104-S HAWAII, U.S.A.

THIS WORK WAS PREPARED BY ME OR UNDER MY SUPERVISION.

KSF, INC. — APRIL 30, 2012 LIC. EXP. DATE

STATE OF HAWAII
DEPARTMENT OF TRANSPORTATION
HIGHWAYS DIVISION

END BLOCK AT ABUTMENT 2
PLAN – REINFORCING LAYOUT
HONOAPIILANI HIGHWAY REALIGNMENT, PHASE 1A
Future Keawe St Extension to Lahainaluna Rd, Part B
Fed. Aid Proj. No. NH-030-1(35)R

Scale: As Noted — Date: June, 2010

SHEET No. SB11.2 OF 11 SHEETS

FINAL DESIGN

346 Rev.

ORIGINAL PLAN — SURVEY PLOTTED BY, SURVEY BY, TRACED BY, DESIGNED BY, QUANTITIES BY, CHECKED BY, NOTE BOOK No. — DATE

DRAWING NAME: Z:\00 ONGOING\40019.0-HONOAPIILANI LAHAINA BYPASS-KAHOMA WO\03-30-11 EM END BLOCKS\HH-SB1101.DWG PLOT TIME: 03-30-11, 4:22 PM

FED. ROAD DIST. NO.	STATE	FED. AID PROJ. NO.	FISCAL YEAR	SHEET NO.	TOTAL SHEETS
HAWAII	HAW.	NH-030-1(35)R	2009	346	383

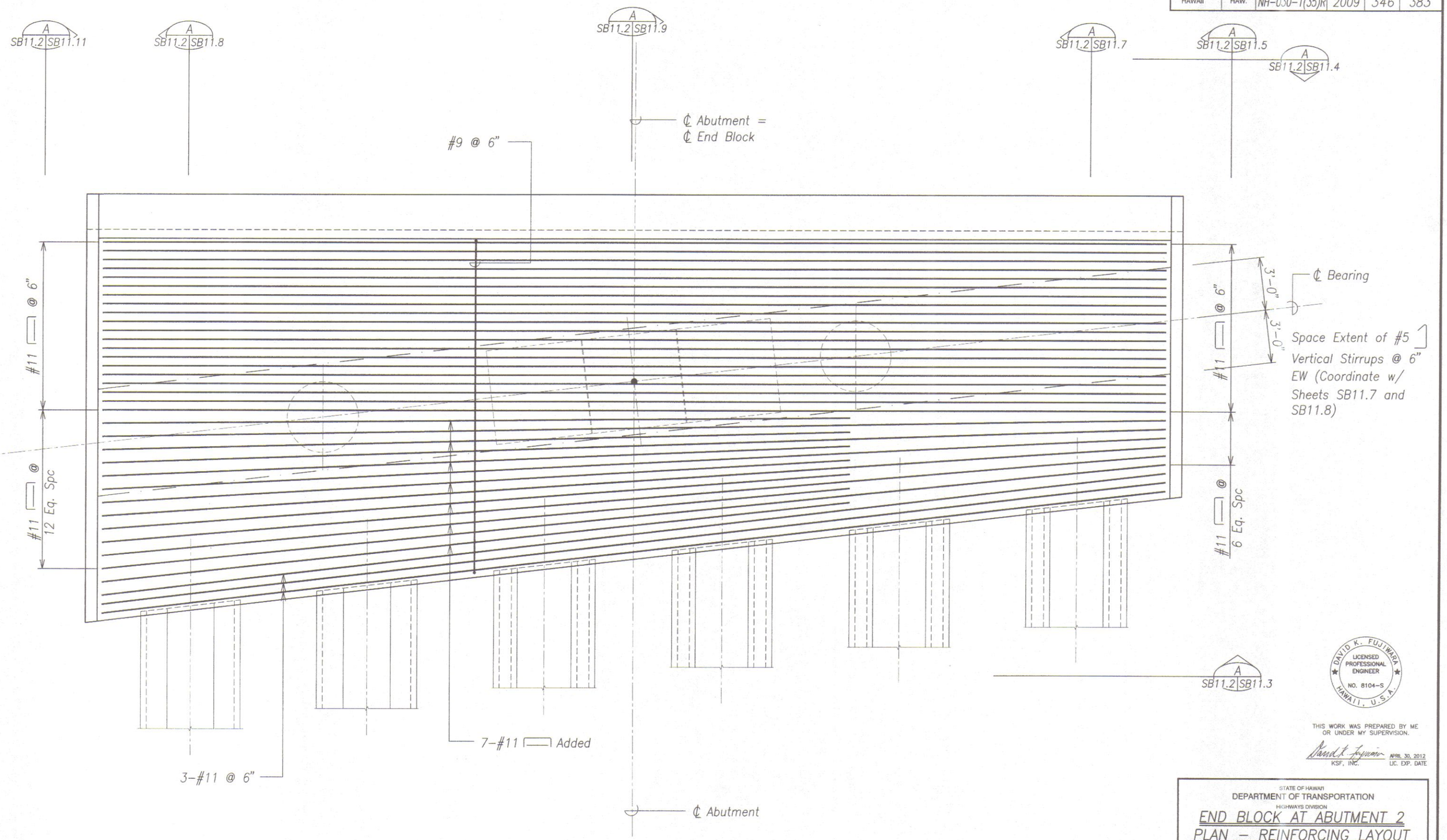

END BLOCK AT ABUTMENT 2 – REINFORCING (A SB11.2 SB11.2)

Scale: 3/8" = 1'-0"

DAVID K. FUJIWARA LICENSED PROFESSIONAL ENGINEER NO. 8104-S HAWAII, U.S.A.

THIS WORK WAS PREPARED BY ME OR UNDER MY SUPERVISION.

KSF, INC. — APRIL 30, 2012 LIC. EXP. DATE

STATE OF HAWAII
DEPARTMENT OF TRANSPORTATION
HIGHWAYS DIVISION

END BLOCK AT ABUTMENT 2
PLAN – REINFORCING LAYOUT
HONOAPIILANI HIGHWAY REALIGNMENT, PHASE 1A
Future Keawe St Extension to Lahainaluna Rd, Part B
Fed. Aid Proj. No. NH-030-1(35)R

Scale: As Noted — Date: June, 2010

SHEET No. SB11.2 OF 11 SHEETS

ORIGINAL PLAN	SURVEY PLOTTED BY	DATE
	DRAWN BY	
NOTE BOOK	TRACED BY	
	DESIGNED BY	
No.	QUANTITIES BY	
	CHECKED BY	

DRAWING NAME: Z:\00 ONGOING\40019.0-HONOAPIILANI LAHAINA BYPASS-KAHOMA WC\06-15-10 COMBINE LAHAINA FINAL DESIGN\HH-SB1101.DWG PLOT TIME: 06-14-10, 8:18 PM)

FED. ROAD DIST. NO.	STATE	FED. AID PROJ. NO.	FISCAL YEAR	SHEET NO.	TOTAL SHEETS
HAWAII	HAW.	NH-030-1(35)R	2009	347	383

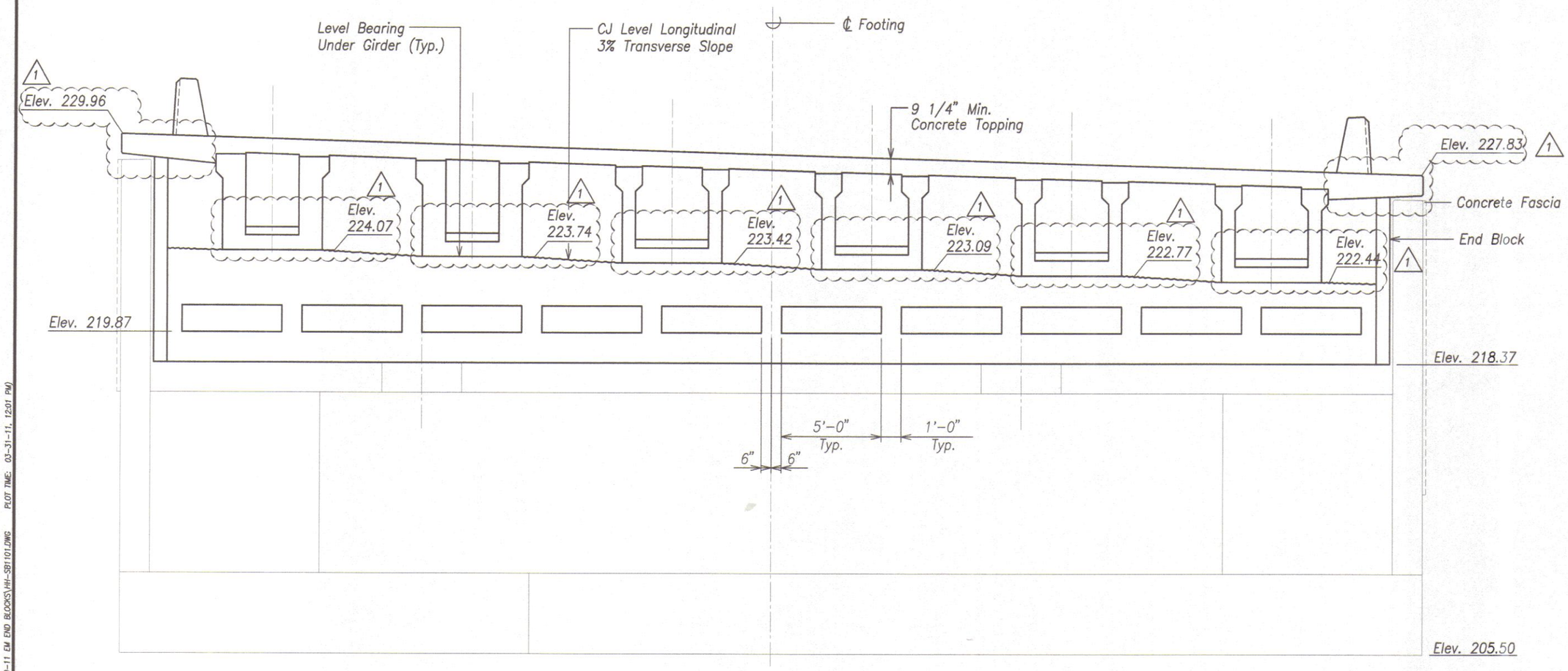

NOTE:
View shown is perpendicular to Girders and Precast Arch Tie Planks.

END BLOCK AT ABUTMENT 2 – FRONT ELEVATION

Scale: 3/8" = 1'-0"

A
SB11.1 SB11.3
SB11.2

DAVID K. FUJIWARA
LICENSED PROFESSIONAL ENGINEER
NO. 8104-S
HAWAII, U.S.A.

THIS WORK WAS PREPARED BY ME OR UNDER MY SUPERVISION.

KSF, INC. — APRIL 30, 2012 LIC. EXP. DATE

DATE	REVISION
2/01/11	1 Revisions

STATE OF HAWAII
DEPARTMENT OF TRANSPORTATION
HIGHWAYS DIVISION

END BLOCK AT ABUTMENT 2
FRONT ELEVATION

HONOAPIILANI HIGHWAY REALIGNMENT, PHASE 1A
Future Keawe St Extension to Lahainaluna Rd, Part B
Fed. Aid Proj. No. NH-030-1(35)R

Scale: As Noted — Date: June, 2010

SHEET No. SB11.3 OF 11 SHEETS

ORIGINAL PLAN — SURVEY PLOTTED BY — DRAWN BY — TRACED BY — DESIGNED BY — QUANTITIES BY — CHECKED BY — DATE
NOTE BOOK No.

DRAWING NAME: Z:\00 ONGOING\40019.0-HONOAPIILANI LAHAINA BYPASS-KAHOMA WO\03-30-11 EM END BLOCKS\HH-SB1101.DWG PLOT TIME: 03-31-11, 12:01 PM

FED. ROAD DIST. NO.	STATE	FED. AID PROJ. NO.	FISCAL YEAR	SHEET NO.	TOTAL SHEETS
HAWAII	HAW.	NH-030-1(35)R	2009	347	383

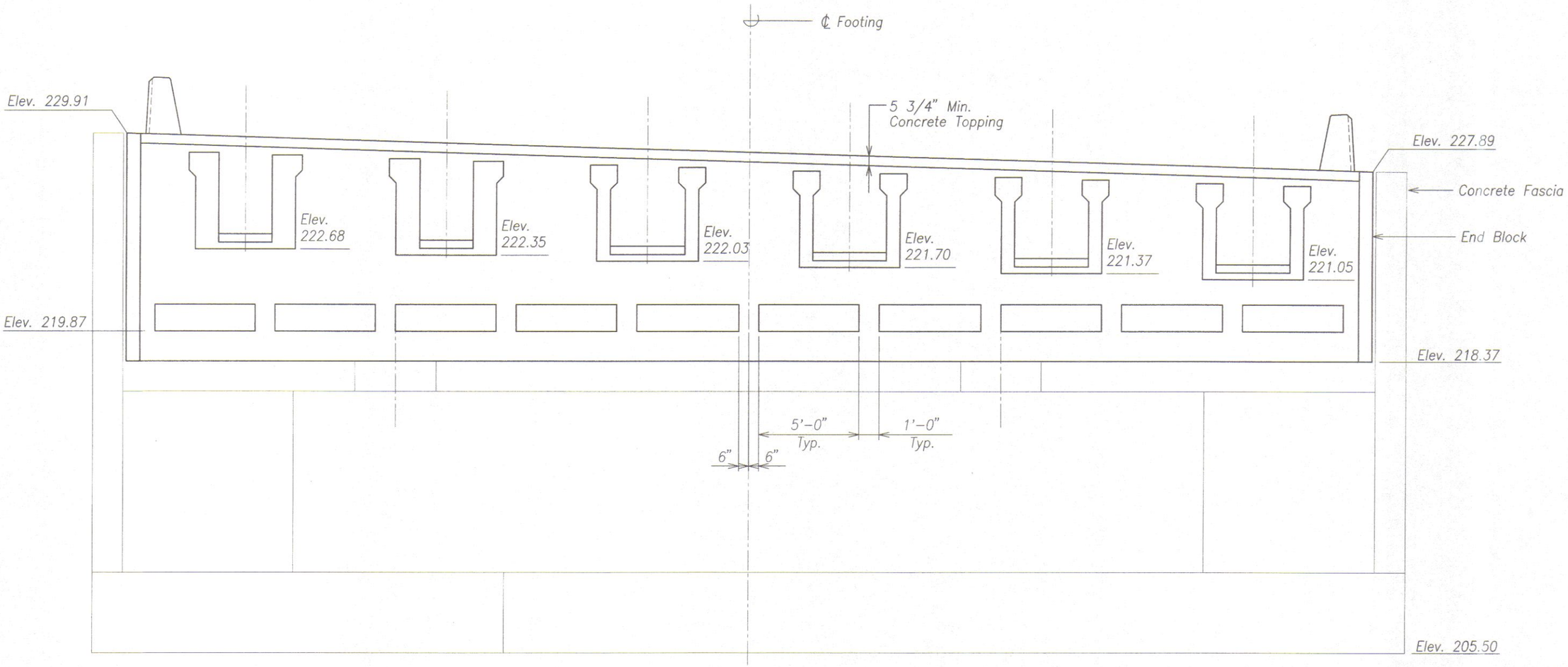

NOTE:
View shown is perpendicular to Girders and Precast Arch Tie Planks.

END BLOCK AT ABUTMENT 2 – FRONT ELEVATION

Scale: 3/8" = 1'-0"

A
SB11.1 SB11.3
SB11.2

DAVID K. FUJIWARA
LICENSED PROFESSIONAL ENGINEER
NO. 8104-S
HAWAII, U.S.A.

THIS WORK WAS PREPARED BY ME OR UNDER MY SUPERVISION.

KSF, INC. APRIL 30, 2012
LIC. EXP. DATE

STATE OF HAWAII
DEPARTMENT OF TRANSPORTATION
HIGHWAYS DIVISION

END BLOCK AT ABUTMENT 2
FRONT ELEVATION
HONOAPIILANI HIGHWAY REALIGNMENT, PHASE 1A
Future Keawe St Extension to Lahainaluna Rd, Part B
Fed. Aid Proj. No. NH-030-1(35)R

Scale: As Noted Date: June, 2010

SHEET No. SB11.3 OF 11 SHEETS

FINAL DESIGN ~~347~~ Rev.

ORIGINAL PLAN | SURVEY PLOTTED BY | DRAWN BY | TRACED BY | DESIGNED BY | QUANTITIES BY | CHECKED BY | DATE
NOTE BOOK No.

DRAWING NAME: Z:\00 ONGOING\40019.0-HONOAPIILANI LAHAINA BYPASS-KAHOMA WO\06-15-10 COMBINE LAHAINA FINAL DESIGN\HH-SB1101.DWG PLOT TIME: 06-14-10, 8:18 PM)

FED. ROAD DIST. NO.	STATE	FED. AID PROJ. NO.	FISCAL YEAR	SHEET NO.	TOTAL SHEETS
HAWAII	HAW.	NH-030-1(35)R	2009	348	383

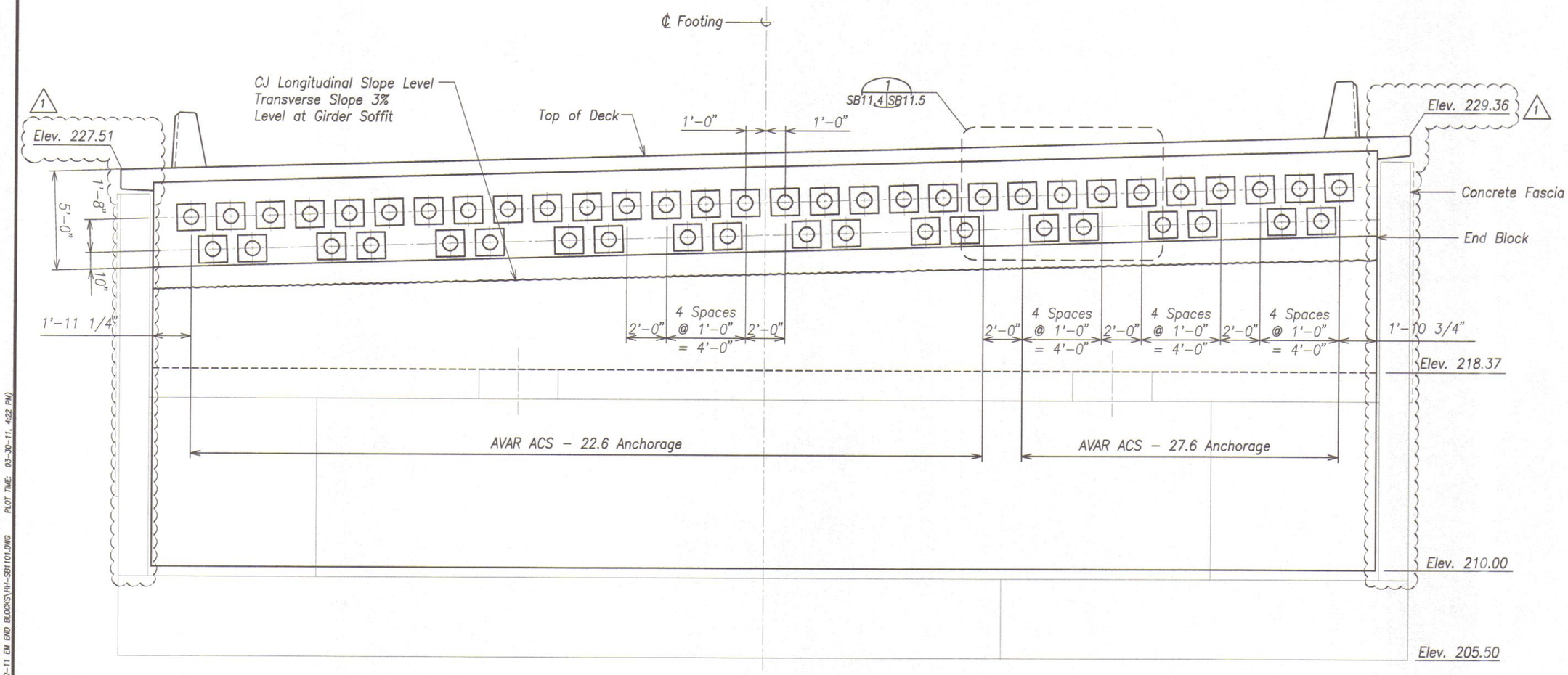

END BLOCK AT ABUTMENT 2 – BACK ELEVATION

Scale: 3/8" = 1'-0"

A
SB11.1 SB11.4

DAVID K. FUJIMARA
LICENSED PROFESSIONAL ENGINEER
NO. 8104-S
HAWAII, U.S.A.

THIS WORK WAS PREPARED BY ME OR UNDER MY SUPERVISION.

KSF, INC. — APRIL 30, 2012 LIC. EXP. DATE

STATE OF HAWAII
DEPARTMENT OF TRANSPORTATION
HIGHWAYS DIVISION

END BLOCK AT ABUTMENT 2
BACK ELEVATION

HONOAPIILANI HIGHWAY REALIGNMENT, PHASE 1A
Future Keawe St Extension to Lahainaluna Rd, Part B
Fed. Aid Proj. No. NH-030-1(35)R

Scale: As Noted — Date: June, 2010

SHEET No. SB11.4 OF 11 SHEETS

DATE	REVISION
2/01/11	1 Revisions

ORIGINAL PLAN — SURVEY PLOTTED BY / DRAWN BY / TRACED BY / DESIGNED BY / QUANTITIES BY / CHECKED BY — DATE
NOTE BOOK No.

DRAWING NAME: Z:\00 ONGOING\40019.0-HONOAPIILANI LAHAINA BYPASS-KAHOMA WO\03-30-11 EM END BLOCKS\HH-SB1101.DWG PLOT TIME: 03-30-11, 4:22 PM

FED. ROAD DIST. NO.	STATE	FED. AID PROJ. NO.	FISCAL YEAR	SHEET NO.	TOTAL SHEETS
HAWAII	HAW.	NH-030-1(35)R	2009	348	383

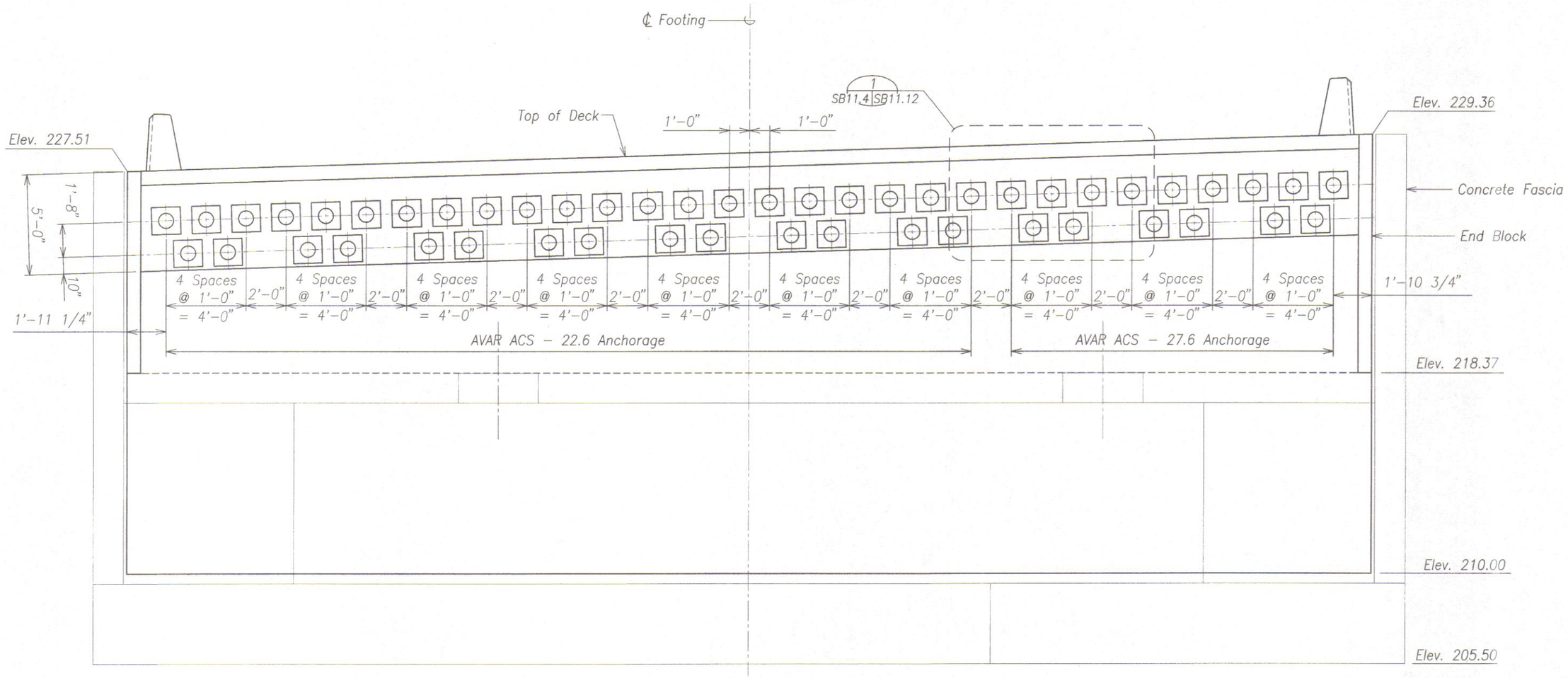

END BLOCK AT ABUTMENT 2 – BACK ELEVATION

Scale: 3/8" = 1'-0"

A
SB11.1 SB11.4

DAVID K. FUJIWARA
LICENSED PROFESSIONAL ENGINEER
NO. 8104-S
HAWAII, U.S.A.

THIS WORK WAS PREPARED BY ME OR UNDER MY SUPERVISION.

KSF, INC. — APRIL 30, 2012 LIC. EXP. DATE

STATE OF HAWAII
DEPARTMENT OF TRANSPORTATION
HIGHWAYS DIVISION

END BLOCK AT ABUTMENT 2
BACK ELEVATION

HONOAPIILANI HIGHWAY REALIGNMENT, PHASE 1A
Future Keawe St Extension to Lahainaluna Rd, Part B
Fed. Aid Proj. No. NH-030-1(35)R

Scale: As Noted — Date: June, 2010

SHEET No. SB11.4 OF 11 SHEETS

ORIGINAL PLAN	SURVEY PLOTTED BY	DATE
	DRAWN BY	"
NOTE BOOK	TRACED BY	"
	DESIGNED BY	"
No.	QUANTITIES BY	"
	CHECKED BY	"

DRAWING NAME: Z:\DD ONGOING\40019.0-HONOAPIILANI LAHAINA BYPASS-KAHOMA WC\06-15-10 COMBINE LAHAINA FINAL DESIGN\HH-SB1101.DWG PLOT TIME: 06-14-10, 8:19 PM)

FINAL DESIGN ~~348~~ Rev.

FED. ROAD DIST. NO.	STATE	FED. AID PROJ. NO.	FISCAL YEAR	SHEET NO.	TOTAL SHEETS
HAWAII	HAW.	NH-030-1(35)R	2009	349	383

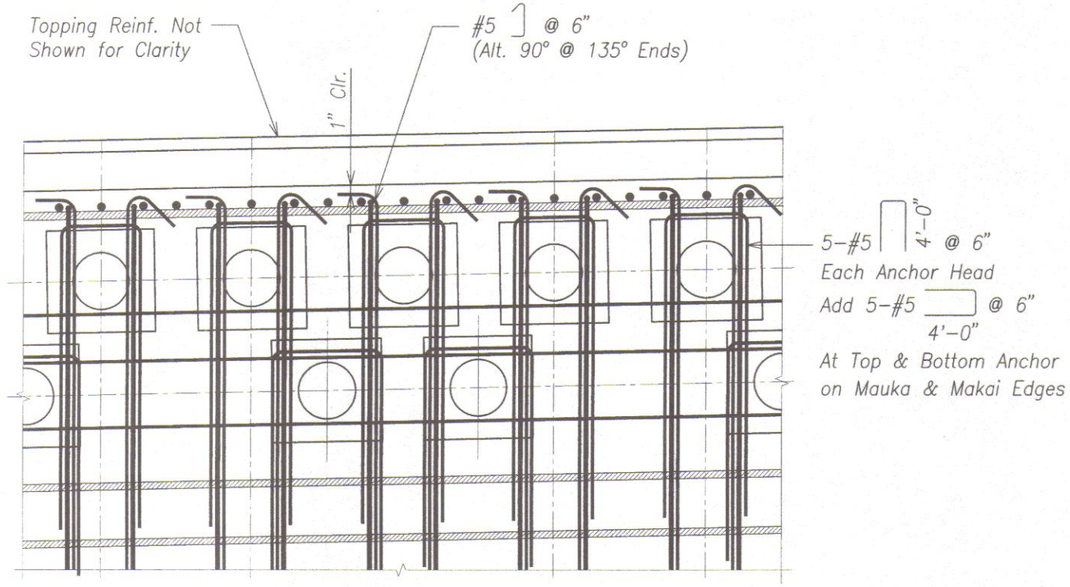

DETAIL 1
Scale: 1" = 1'-0" SB11.4 SB11.5

DRAWING NAME: Z:\00 ONGOING\40019.0-HONOAPIILANI LAHAINA BYPASS-KAHOMA WO\06-15-10 COMBINE LAHAINA FINAL DESIGN\HH-SB1105.DWG PLOT TIME: 06-14-10, 8:19 PM

ORIGINAL PLAN	SURVEY PLOTTED BY	DATE
	DRAWN BY	"
NOTE BOOK	TRACED BY	"
	DESIGNED BY	"
No.	QUANTITIES BY	"
	CHECKED BY	"

DAVID K. FUJIWARA
LICENSED PROFESSIONAL ENGINEER
NO. 8104-S
HAWAII, U.S.A.

THIS WORK WAS PREPARED BY ME OR UNDER MY SUPERVISION.

David K. Fujiwara APRIL 30, 2012
KSF, INC. LIC. EXP. DATE

STATE OF HAWAII
DEPARTMENT OF TRANSPORTATION
HIGHWAYS DIVISION

END BLOCK AT ABUTMENT 2
DETAIL

HONOAPIILANI HIGHWAY REALIGNMENT, PHASE 1A
Future Keawe St Extension to Lahainaluna Rd, Part B
Fed. Aid Proj. No. NH-030-1(35)R

Scale: As Noted Date: June, 2010

SHEET No. SB11.5 OF 11 SHEETS

FINAL DESIGN 349

FED. ROAD DIST. NO.	STATE	FED. AID PROJ. NO.	FISCAL YEAR	SHEET NO.	TOTAL SHEETS
HAWAII	HAW.	NH-030-1(35)R	2009	350	383

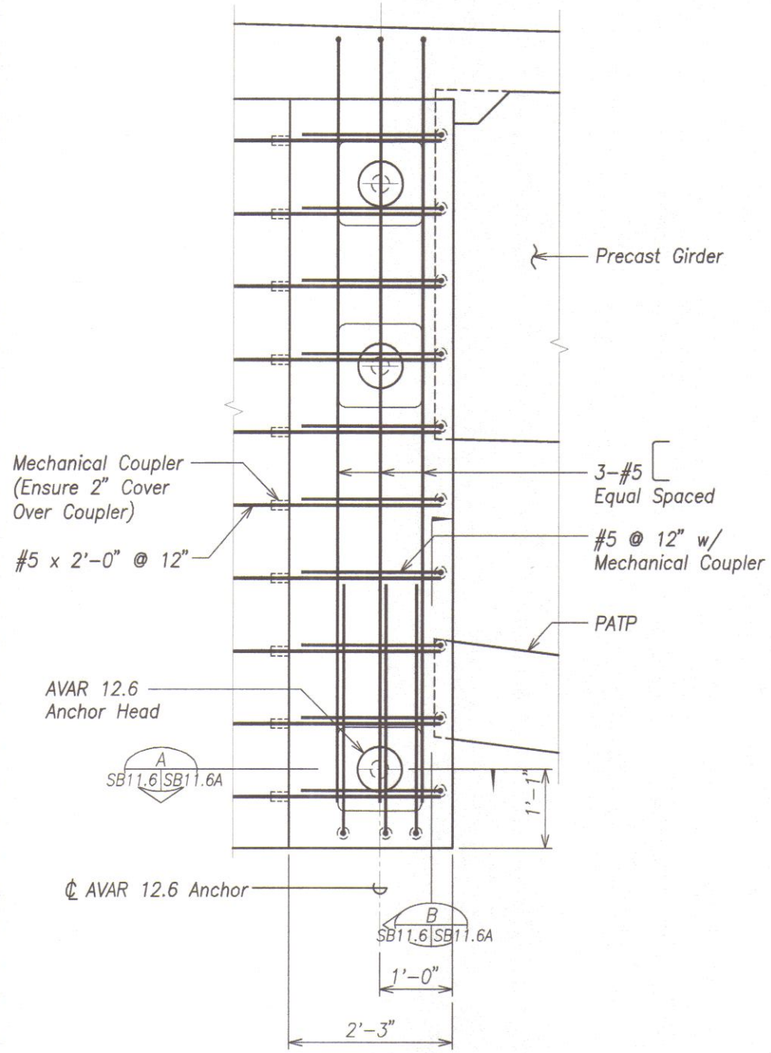

ELEVATION A SB11.6 SB11.6
Scale: 1" = 1'-0"

1

DRAWING NAME: Z:\00 ONGOING\40019.0-HONOAPIILANI LAHAINA BYPASS-KAHOMA WO\03-30-11 EM END BLOCKS\HH-SB1101.DWG PLOT TIME: 03-30-11, 4:23 PM

ORIGINAL PLAN	SURVEY PLOTTED BY	DATE
	DRAWN BY	
NOTE BOOK	TRACED BY	
	DESIGNED BY	
No.	QUANTITIES BY	
	CHECKED BY	

DATE	REVISION
2/01/11	1 Revisions

DAVID K. FUJIWARA LICENSED PROFESSIONAL ENGINEER NO. 8104-S HAWAII, U.S.A.

THIS WORK WAS PREPARED BY ME OR UNDER MY SUPERVISION.

KSF, INC. — APRIL 30, 2012 LIC. EXP. DATE

STATE OF HAWAII
DEPARTMENT OF TRANSPORTATION
HIGHWAYS DIVISION

SECTION AT 12x0.6 PT ANCHORS

HONOAPIILANI HIGHWAY REALIGNMENT, PHASE 1A
Future Keawe St Extension to Lahainaluna Rd, Part B
Fed. Aid Proj. No. NH-030-1(35)R

Scale: As Noted — Date: June, 2010

SHEET No. SB11.6 OF 11 SHEETS

FINAL DESIGN 350

FED. ROAD DIST. NO.	STATE	FED. AID PROJ. NO.	FISCAL YEAR	SHEET NO.	TOTAL SHEETS
HAWAII	HAW.	NH-030-1(35)R	2009	350	383

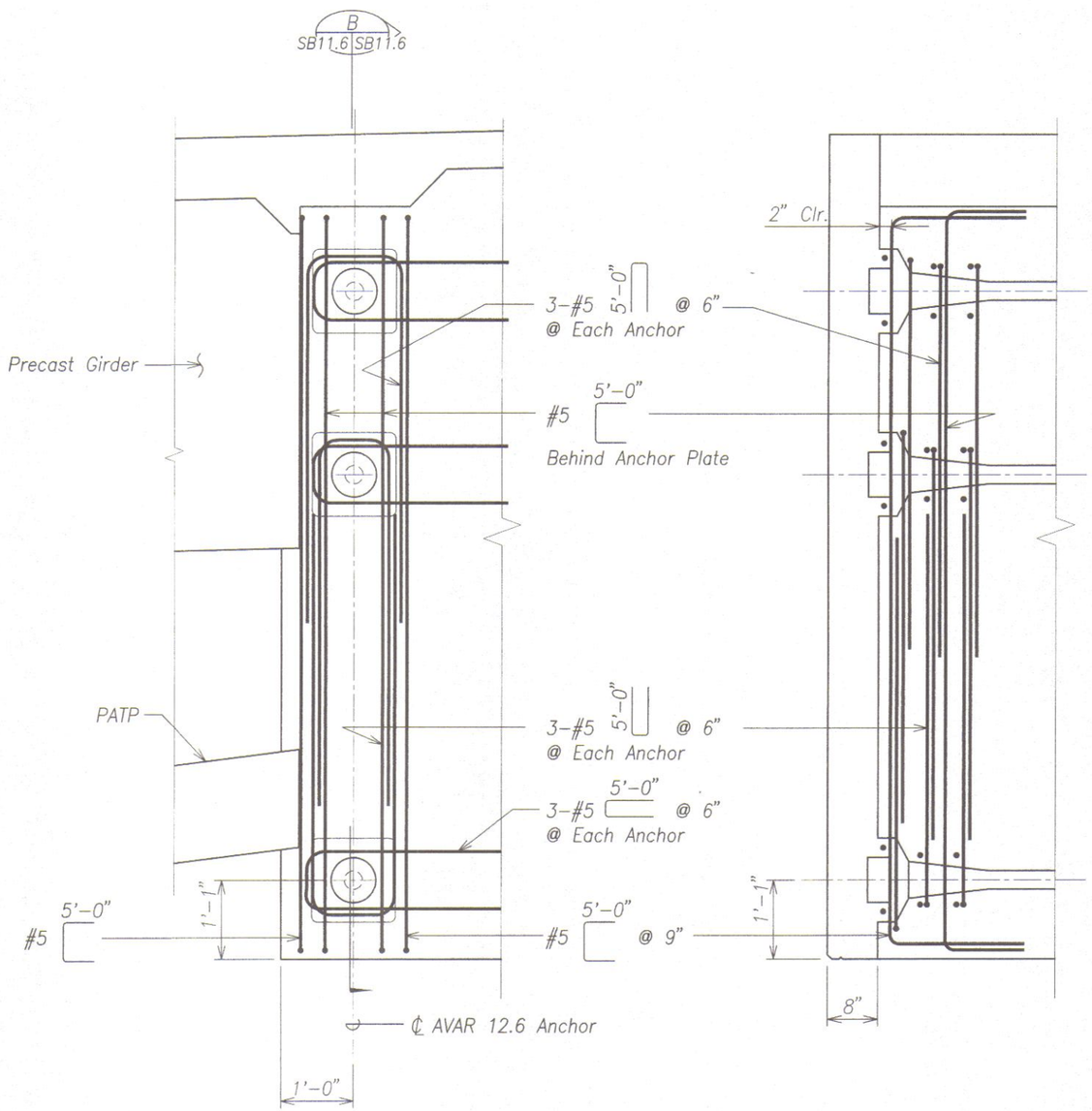

ELEVATION (A, SB11.6 | SB11.6)
Scale: 1" = 1'-0"

SECTION (B, SB11.6 | SB11.6)
Scale: 1" = 1'-0"

ORIGINAL PLAN	SURVEY PLOTTED BY	DATE
	DRAWN BY	
NOTE BOOK	TRACED BY	
	DESIGNED BY	
No.	QUANTITIES BY	
	CHECKED BY	

DRAWING NAME: Z:\00 ONGOING\40019.0-HONOAPIILANI LAHAINA BYPASS-KAHOMA WO\06-15-10 COMBINE LAHAINA FINAL DESIGN\HH-SB1101.DWG PLOT TIME: 06-14-10, 8:20 PM

DAVID K. FUJIWARA LICENSED PROFESSIONAL ENGINEER NO. 8104-S HAWAII, U.S.A.

THIS WORK WAS PREPARED BY ME OR UNDER MY SUPERVISION.

KSF, INC. — APRIL 30, 2012 LIC. EXP. DATE

STATE OF HAWAII
DEPARTMENT OF TRANSPORTATION
HIGHWAYS DIVISION

SECTION AT 12x0.6 PT ANCHORS

HONOAPIILANI HIGHWAY REALIGNMENT, PHASE 1A
Future Keawe St Extension to Lahainaluna Rd, Part B
Fed. Aid Proj. No. NH-030-1(35)R

Scale: As Noted — Date: June, 2010

SHEET No. SB11.6 OF 11 SHEETS

FINAL DESIGN ~~350~~ Rev.

FED. ROAD DIST. NO.	STATE	FED. AID PROJ. NO.	FISCAL YEAR	SHEET NO.	TOTAL SHEETS
HAWAII	HAW.	NH-030-1(35)R	2009	350S-1	383

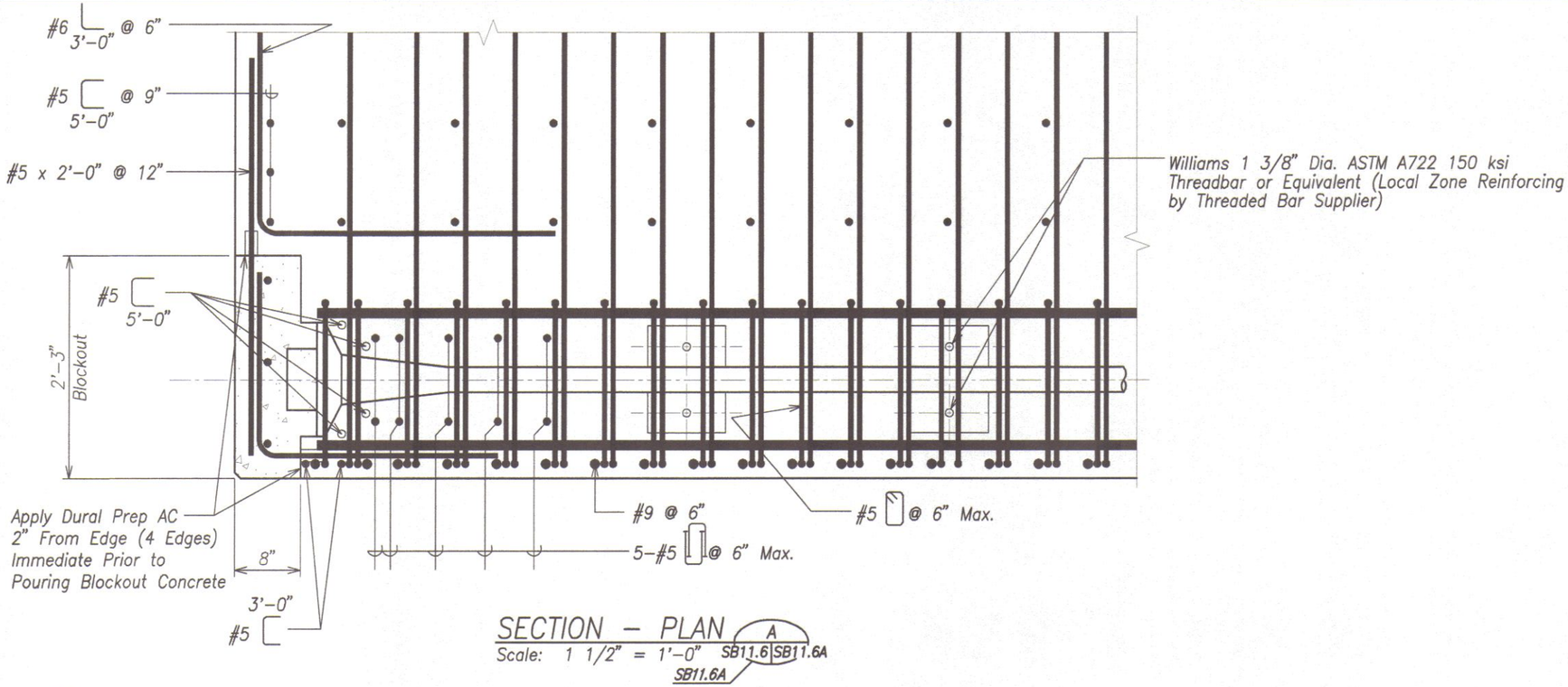

SECTION – PLAN A

Scale: 1 1/2" = 1'-0" SB11.6 SB11.6A

SB11.6A

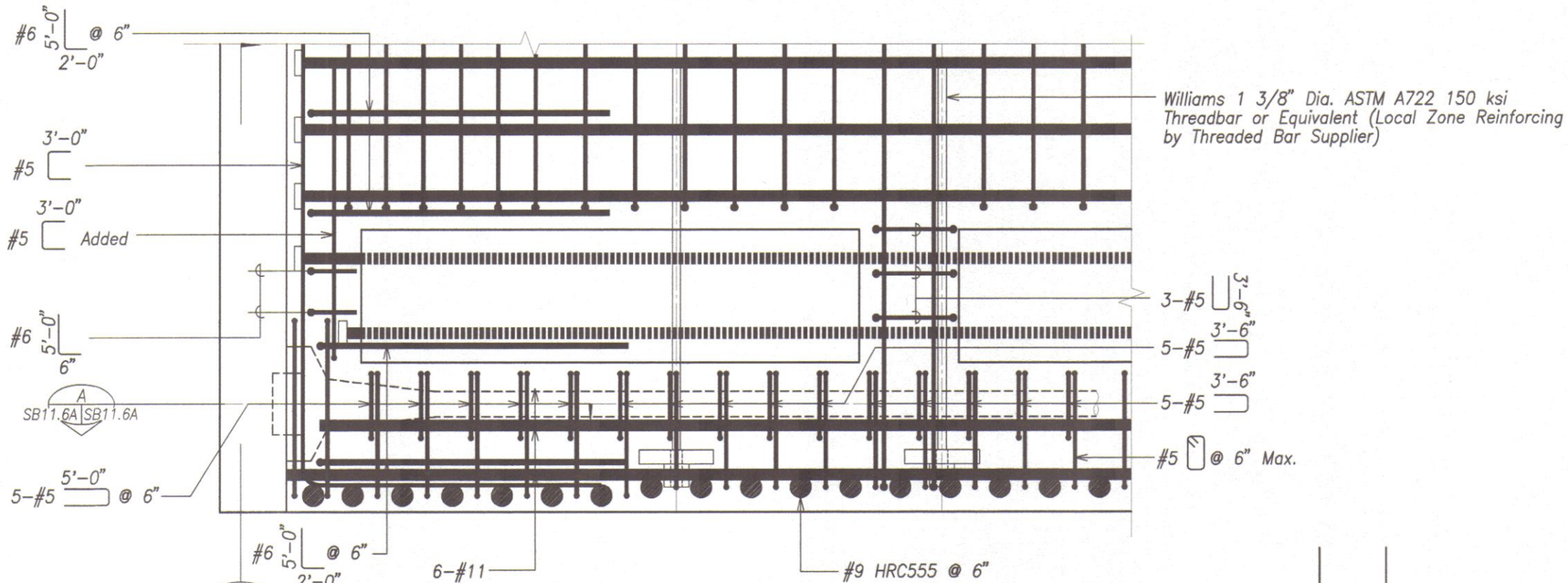

SECTION – ELEVATION B

Scale: 1 1/2" = 1'-0" SB11.6 SB11.6A

DATE	REVISION
3/07/11	New Sheet

DAVID K. FUJIMARA LICENSED PROFESSIONAL ENGINEER NO. 8104-S HAWAII, U.S.A.

THIS WORK WAS PREPARED BY ME OR UNDER MY SUPERVISION.

KSF, INC. — APRIL 30, 2012 LIC. EXP. DATE

STATE OF HAWAII
DEPARTMENT OF TRANSPORTATION
HIGHWAYS DIVISION

SECTION AT 12x0.6 PT ANCHORS

HONOAPIILANI HIGHWAY REALIGNMENT, PHASE 1A
Future Keawe St Extension to Lahainaluna Rd, Part B
Fed. Aid Proj. No. NH-030-1(35)R

Scale: As Noted Date: June, 2010

SHEET No. SB11.6A OF 11 SHEETS

FINAL DESIGN 350S-1

ORIGINAL PLAN | SURVEY PLOTTED BY | DRAWN BY | TRACED BY | DESIGNED BY | QUANTITIES BY | CHECKED BY | DATE | NOTE BOOK No.

DRAWING NAME: Z:\00 ONGOING\40019.0-HONOAPIILANI LAHAINA BYPASS-KAHOMA WO\03-30-11 EM END BLOCKS\HI-SB1101.DWG PLOT TIME: 03-30-11, 4:24 PM

FED. ROAD DIST. NO.	STATE	FED. AID PROJ. NO.	FISCAL YEAR	SHEET NO.	TOTAL SHEETS
HAWAII	HAW.	NH-030-1(35)R	2009	351	383

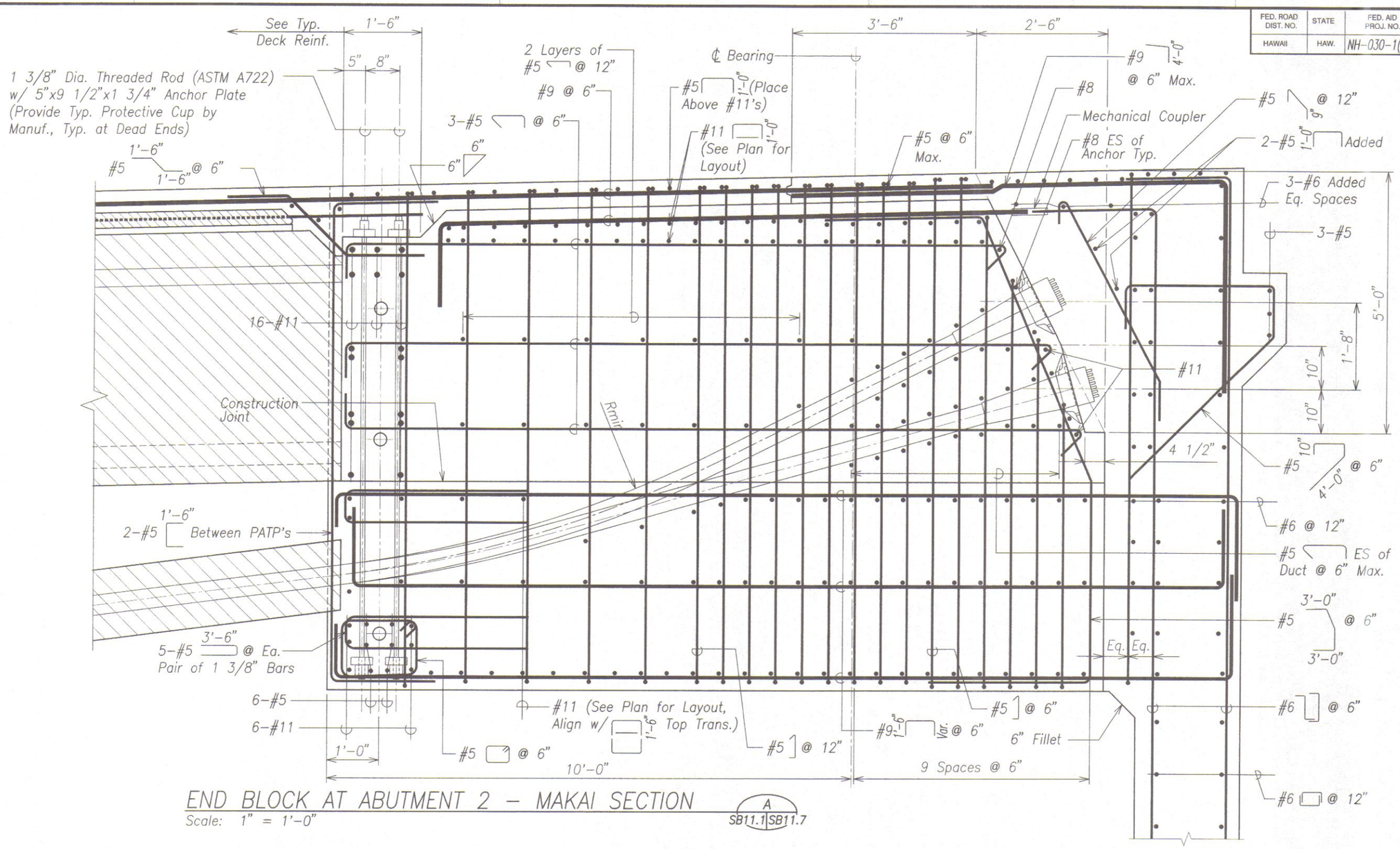

END BLOCK AT ABUTMENT 2 – MAKAI SECTION

Scale: 1" = 1'-0"

A
SB11.1 SB11.7

NOTES:

1. Rmin = 22' For 19-0.6" Strand Tendons
   24' For 22-0.6" Strand Tendons
   27' For 27-0.6" Strand Tendons

2. See Sheet SB11.2 for #5 ⌉ spacing at ℄ Bearing.

DAVID K. FUJIWARA
LICENSED PROFESSIONAL ENGINEER
NO. 8104-S
HAWAII, U.S.A.

THIS WORK WAS PREPARED BY ME OR UNDER MY SUPERVISION.

KSF, INC. — APRIL 30, 2012 LIC. EXP. DATE

STATE OF HAWAII
DEPARTMENT OF TRANSPORTATION
HIGHWAYS DIVISION

END BLOCK AT ABUTMENT 2
MAKAI SECTION

HONOAPIILANI HIGHWAY REALIGNMENT, PHASE 1A
Future Keawe St Extension to Lahainaluna Rd, Part B
Fed. Aid Proj. No. NH-030-1(35)R

Scale: As Noted — Date: June, 2010

SHEET No. SB11.7 OF 11 SHEETS

ORIGINAL PLAN | SURVEY PLOTTED BY ___ DATE | DRAWN BY " | TRACED BY " | DESIGNED BY " | QUANTITIES BY " | CHECKED BY " | NOTE BOOK No.

DRAWING NAME: Z:\00 ONGOING\40019.0-HONOAPIILANI LAHAINA BYPASS-KAHOMA WO\06-15-10 COMBINE LAHAINA FINAL DESIGN\HH-SB1101.DWG PLOT TIME: 06-14-10, 8:20 PM

FED. ROAD DIST. NO.	STATE	FED. AID PROJ. NO.	FISCAL YEAR	SHEET NO.	TOTAL SHEETS
HAWAII	HAW.	NH-030-1(35)R	2009	352	383

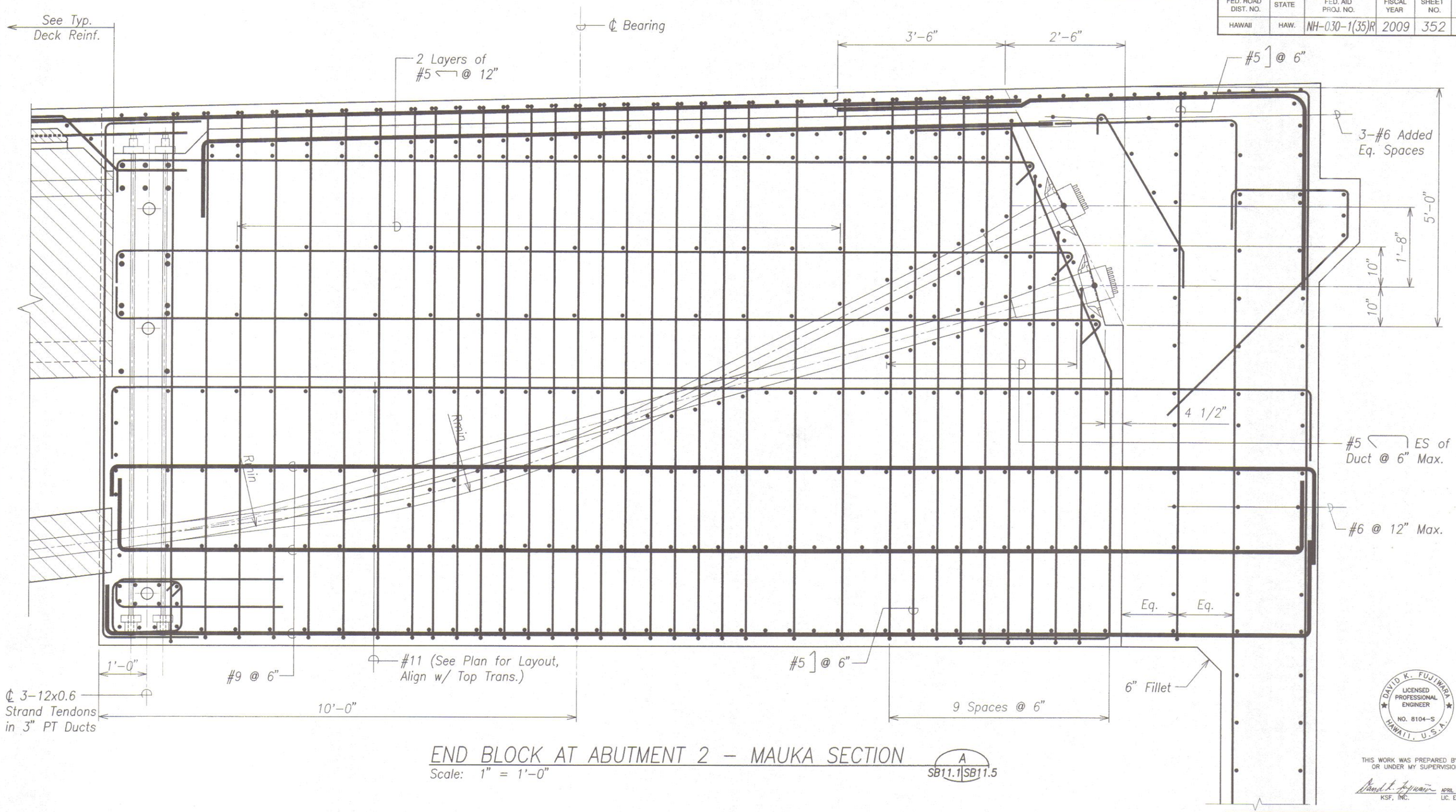

END BLOCK AT ABUTMENT 2 – MAUKA SECTION

Scale: 1" = 1'-0"

A
SB11.1 SB11.5

NOTES:

1. Rmin = 22' For 19-0.6" Strand Tendons
   24' For 22-0.6" Strand Tendons
   27' For 27-0.6" Strand Tendons
2. See Sheet SB11.1B for #5 ⌡ spacing at ℄ Bearing.
3. See Sheet SB11.7 for additional information.

DAVID K. FUJIWARA
LICENSED PROFESSIONAL ENGINEER
NO. 8104-S
HAWAII, U.S.A.

THIS WORK WAS PREPARED BY ME OR UNDER MY SUPERVISION.

KSF, INC. — APRIL 30, 2012 LIC. EXP. DATE

STATE OF HAWAII
DEPARTMENT OF TRANSPORTATION
HIGHWAYS DIVISION

END BLOCK AT ABUTMENT 2
MAUKA SECTION
HONOAPIILANI HIGHWAY REALIGNMENT, PHASE 1A
Future Keawe St Extension to Lahainaluna Rd, Part B
Fed. Aid Proj. No. NH-030-1(35)R

Scale: As Noted — Date: June, 2010

SHEET No. SB11.8 OF 11 SHEETS

ORIGINAL PLAN | SURVEY PLOTTED BY | DRAWN BY | TRACED BY | DESIGNED BY | QUANTITIES BY | CHECKED BY | DATE
NOTE BOOK No.

DRAWING NAME: Z:\OD ONGOING\40019.0-HONOAPIILANI LAHAINA BYPASS-KAHOMA WO\06-15-10 COMBINE LAHAINA FINAL DESIGN\HH-SB1101.DWG PLOT TIME: 06-14-10, 8:20 PM)

FED. ROAD DIST. NO.	STATE	FED. AID PROJ. NO.	FISCAL YEAR	SHEET NO.	TOTAL SHEETS
HAWAII	HAW.	NH-030-1(35)R	2009	353	383

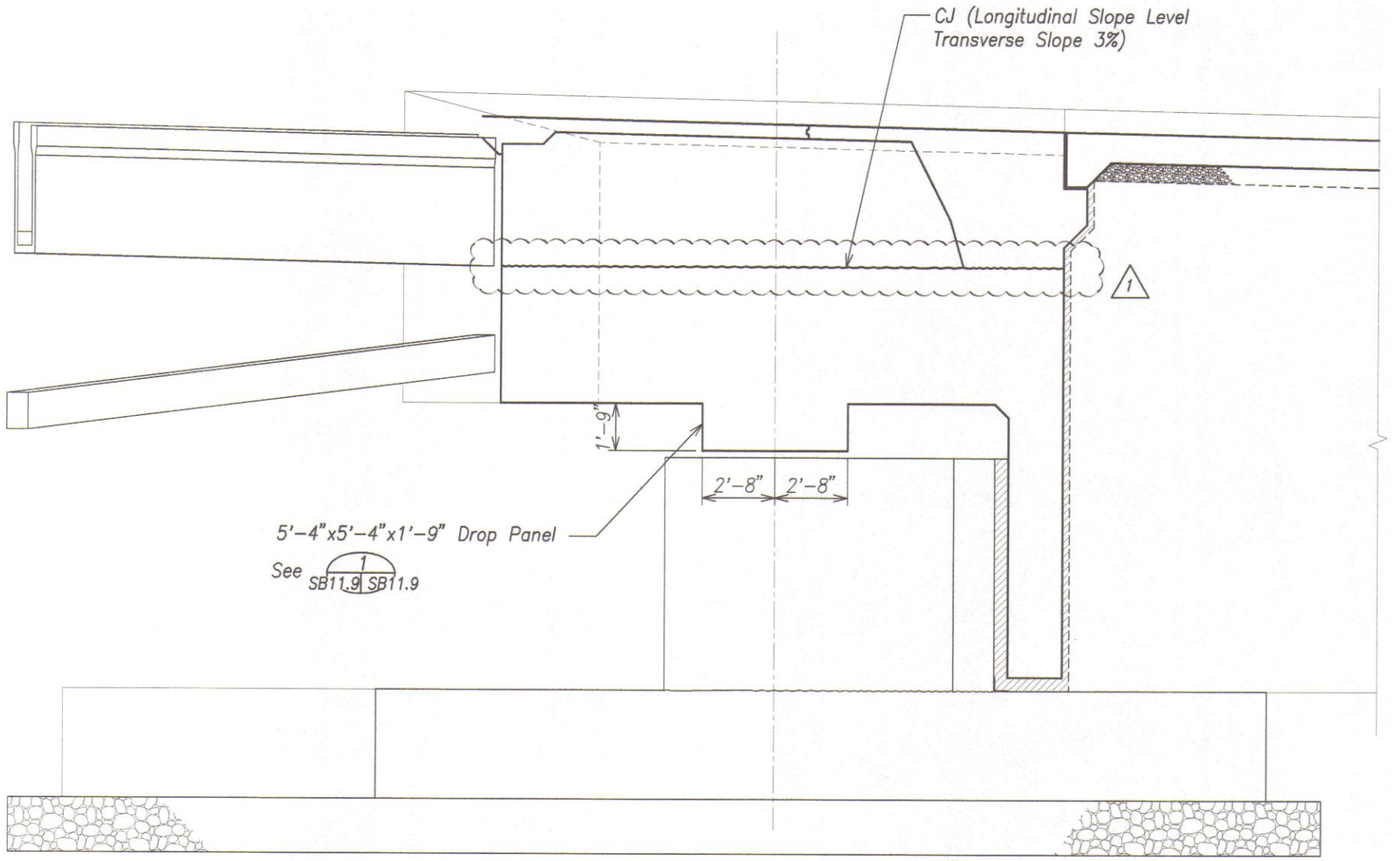

END BLOCK AT ABUTMENT 2 – SECTION AT DROP PANEL (A SB11.1 SB11.9)
Scale: 3/8" = 1'-0"

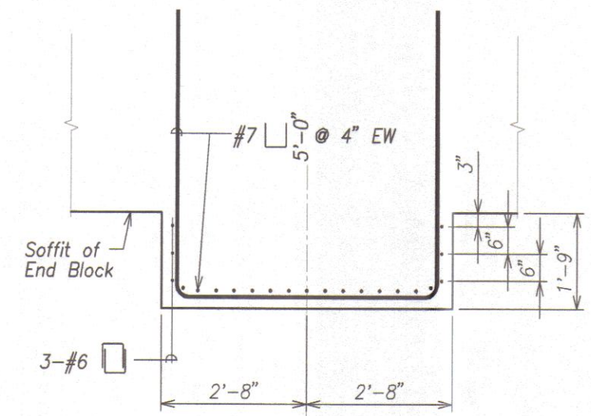

DROP PANEL (1 SB11.9 SB11.9)
Scale: 3/4" = 1'-0"

DAVID K. FUJIWARA LICENSED PROFESSIONAL ENGINEER NO. 8104-S HAWAII, U.S.A.

THIS WORK WAS PREPARED BY ME OR UNDER MY SUPERVISION.

KSF, INC. — APRIL 30, 2012 LIC. EXP. DATE

STATE OF HAWAII
DEPARTMENT OF TRANSPORTATION
HIGHWAYS DIVISION

END BLOCK AT ABUTMENT 2
SECTION AT DROP PANEL
HONOAPIILANI HIGHWAY REALIGNMENT, PHASE 1A
Future Keawe St Extension to Lahainaluna Rd, Part B
Fed. Aid Proj. No. NH-030-1(35)R

Scale: As Noted — Date: June, 2010

SHEET No. SB11.9 OF 11 SHEETS

DATE	REVISION
2/01/11	1 Revisions

ORIGINAL PLAN — SURVEY PLOTTED BY / DRAWN BY / TRACED BY / DESIGNED BY / QUANTITIES BY / CHECKED BY — DATE
NOTE BOOK No.

DRAWING NAME: Z:\00 ONGOING\40019.0-HONOAPIILANI LAHAINA BYPASS-KAHOMA WO\03-30-11 EM END BLOCKS\HH-SB1101.DWG PLOT TIME: 03-30-11, 4:25 PM

FINAL DESIGN 353

FED. ROAD DIST. NO.	STATE	FED. AID PROJ. NO.	FISCAL YEAR	SHEET NO.	TOTAL SHEETS
HAWAII	HAW.	NH-030-1(35)R	2009	353	383

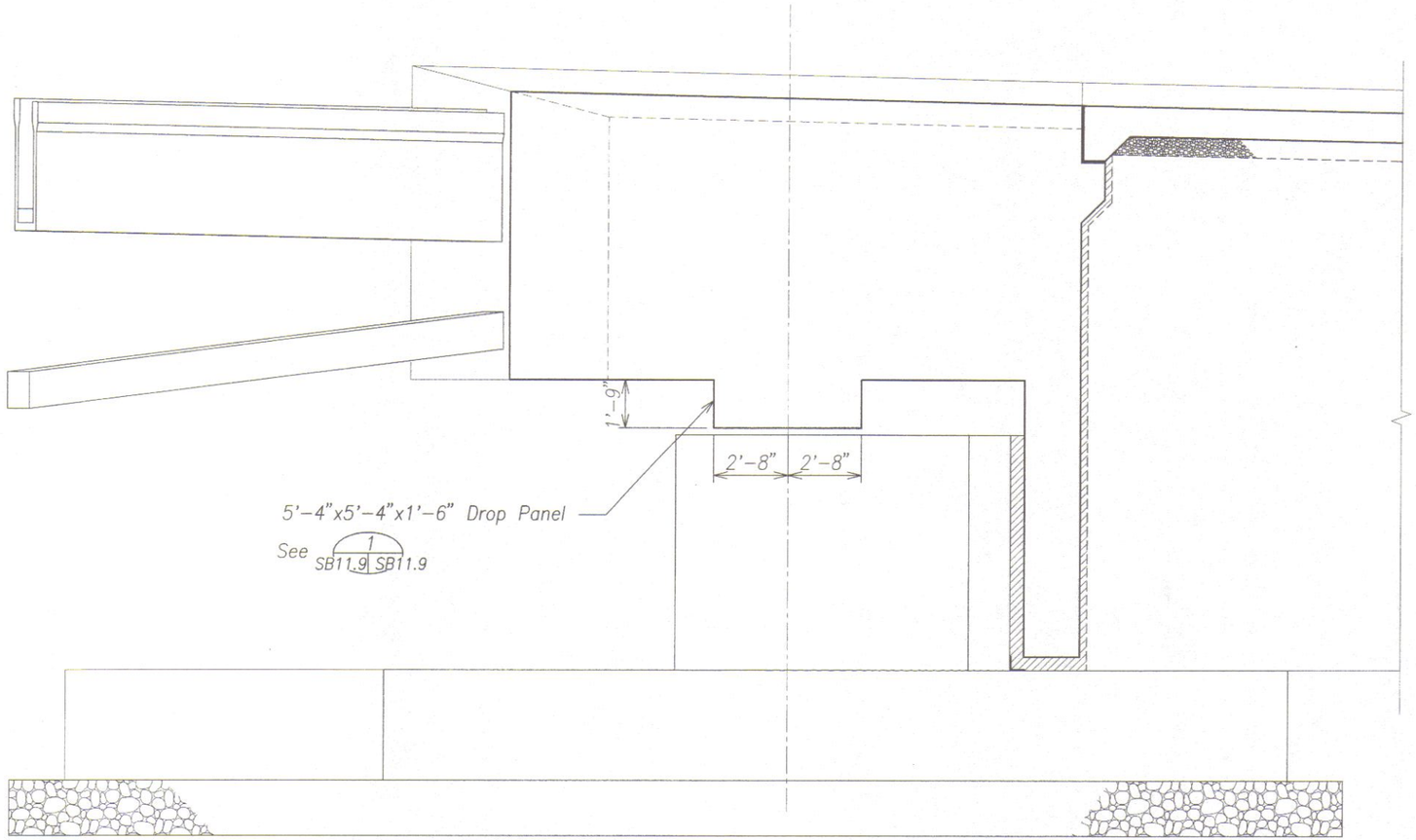

END BLOCK AT ABUTMENT 2 – SECTION AT DROP PANEL A SB11.1 SB11.9
Scale: 3/8" = 1'-0"

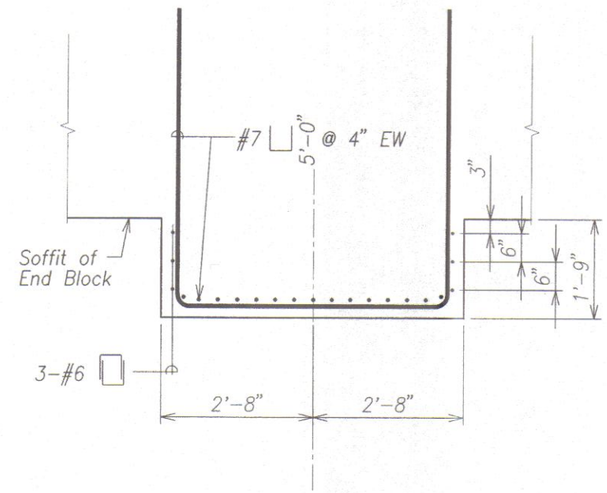

DROP PANEL 1 SB11.9 SB11.9
Scale: 3/4" = 1'-0"

DAVID K. FUJIWARA
LICENSED PROFESSIONAL ENGINEER
NO. 8104-S
HAWAII, U.S.A.

THIS WORK WAS PREPARED BY ME OR UNDER MY SUPERVISION.

KSF, INC. APRIL 30, 2012 LIC. EXP. DATE

STATE OF HAWAII
DEPARTMENT OF TRANSPORTATION
HIGHWAYS DIVISION

END BLOCK AT ABUTMENT 2
SECTION AT DROP PANEL
HONOAPIILANI HIGHWAY REALIGNMENT, PHASE 1A
Future Keawe St Extension to Lahainaluna Rd, Part B
Fed. Aid Proj. No. NH-030-1(35)R

Scale: As Noted Date: June, 2010

SHEET No. SB11.9 OF 11 SHEETS

FINAL DESIGN ~~353~~ Rev.

ORIGINAL PLAN	SURVEY PLOTTED BY	DATE
	DRAWN BY	"
NOTE BOOK	TRACED BY	"
	DESIGNED BY	"
	QUANTITIES BY	"
No.	CHECKED BY	"

DRAWING NAME: Z:\00 ONGOING\40019.0-HONOAPIILANI LAHAINA BYPASS-KAHOMA WO\06-15-10 COMBINE LAHAINA FINAL DESIGN\HH-SB1101.DWG PLOT TIME: 06-14-10, 8:20 PM)

FED. ROAD DIST. NO.	STATE	FED. AID PROJ. NO.	FISCAL YEAR	SHEET NO.	TOTAL SHEETS
HAWAII	HAW.	NH-030-1(35)R	2009	354	383

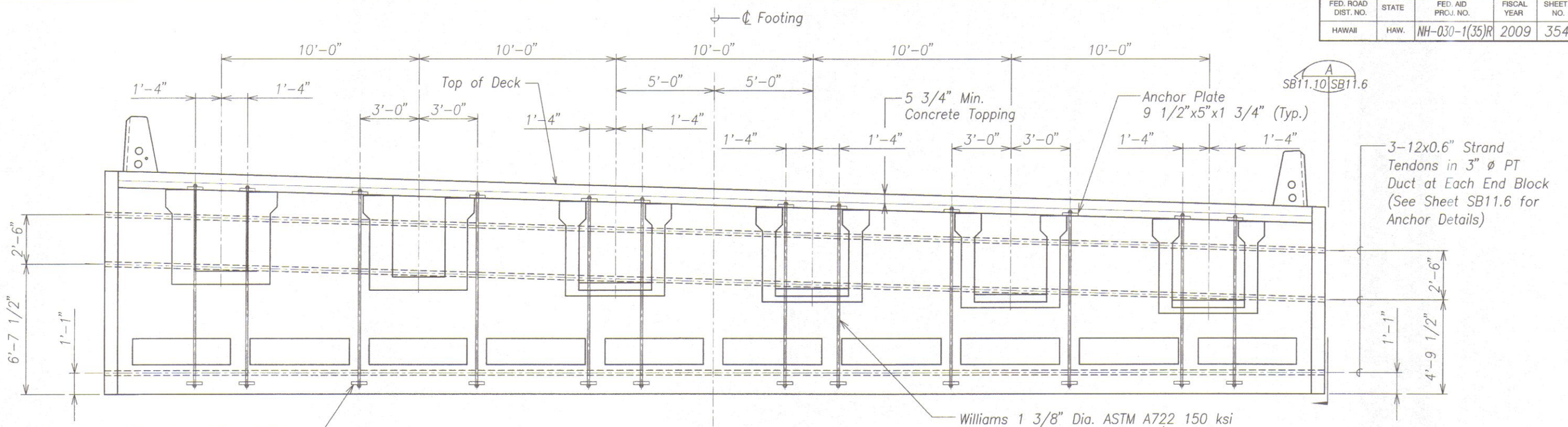

END BLOCK AT ABUTMENT 2 – SECTION A SB11.1 SB11.10

Scale: 3/8" = 1'-0"

NOTE:
View shown is perpendicular to Girders and Precast Arch Tie Planks.

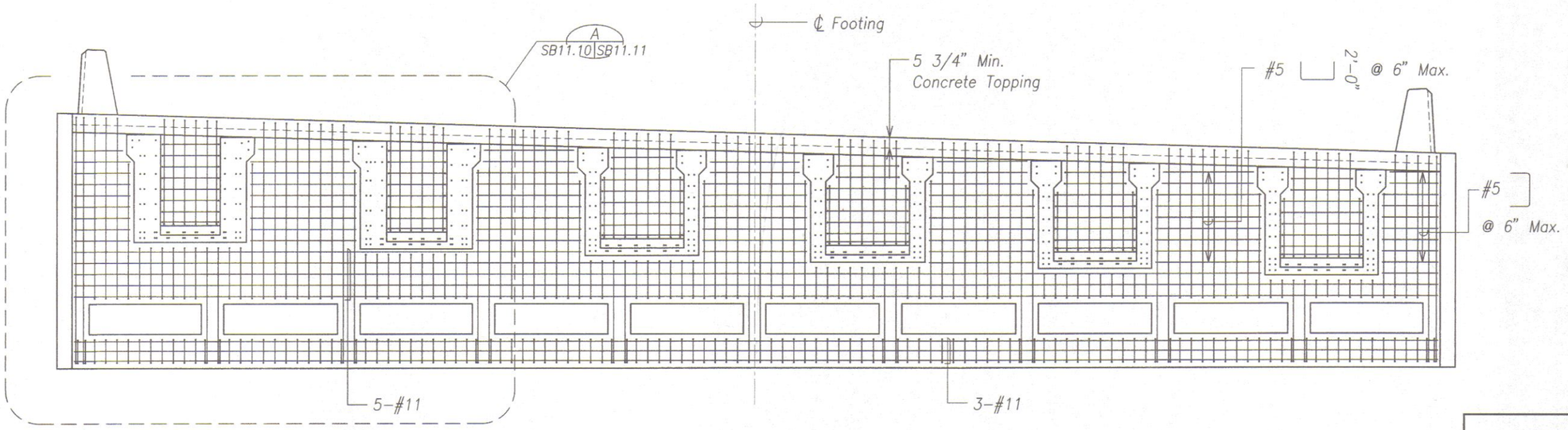

END BLOCK AT ABUTMENT 2 – SECTION B SB11.1 SB11.10

Scale: 3/8" = 1'-0"

DAVID K. FUJIWARA
LICENSED PROFESSIONAL ENGINEER
NO. 8104-S
HAWAII, U.S.A.

THIS WORK WAS PREPARED BY ME OR UNDER MY SUPERVISION.

KSF, INC. APRIL 30, 2012 LIC. EXP. DATE

STATE OF HAWAII
DEPARTMENT OF TRANSPORTATION
HIGHWAYS DIVISION

END BLOCK AT ABUTMENT 2
SECTIONS

HONOAPIILANI HIGHWAY REALIGNMENT, PHASE 1A
Future Keawe St Extension to Lahainaluna Rd, Part B
Fed. Aid Proj. No. NH-030-1(35)R

Scale: As Noted Date: June, 2010

SHEET No. SB11.10 OF 11 SHEETS

ORIGINAL PLAN	SURVEY PLOTTED BY	DATE
	DRAWN BY	
	TRACED BY	
NOTE BOOK	DESIGNED BY	
No.	QUANTITIES BY	
	CHECKED BY	

DRAWING NAME: Z:\00 ONGOING\40019.0-HONOAPIILANI LAHAINA BYPASS-KAHOMA WO\06-15-10 COMBINE LAHAINA FINAL DESIGN\HH-SB1110.DWG PLOT TIME: 06-14-10, 8:21 PM)

FED. ROAD DIST. NO.	STATE	FED. AID PROJ. NO.	FISCAL YEAR	SHEET NO.	TOTAL SHEETS
HAWAII	HAW.	NH-030-1(35)R	2009	355	383

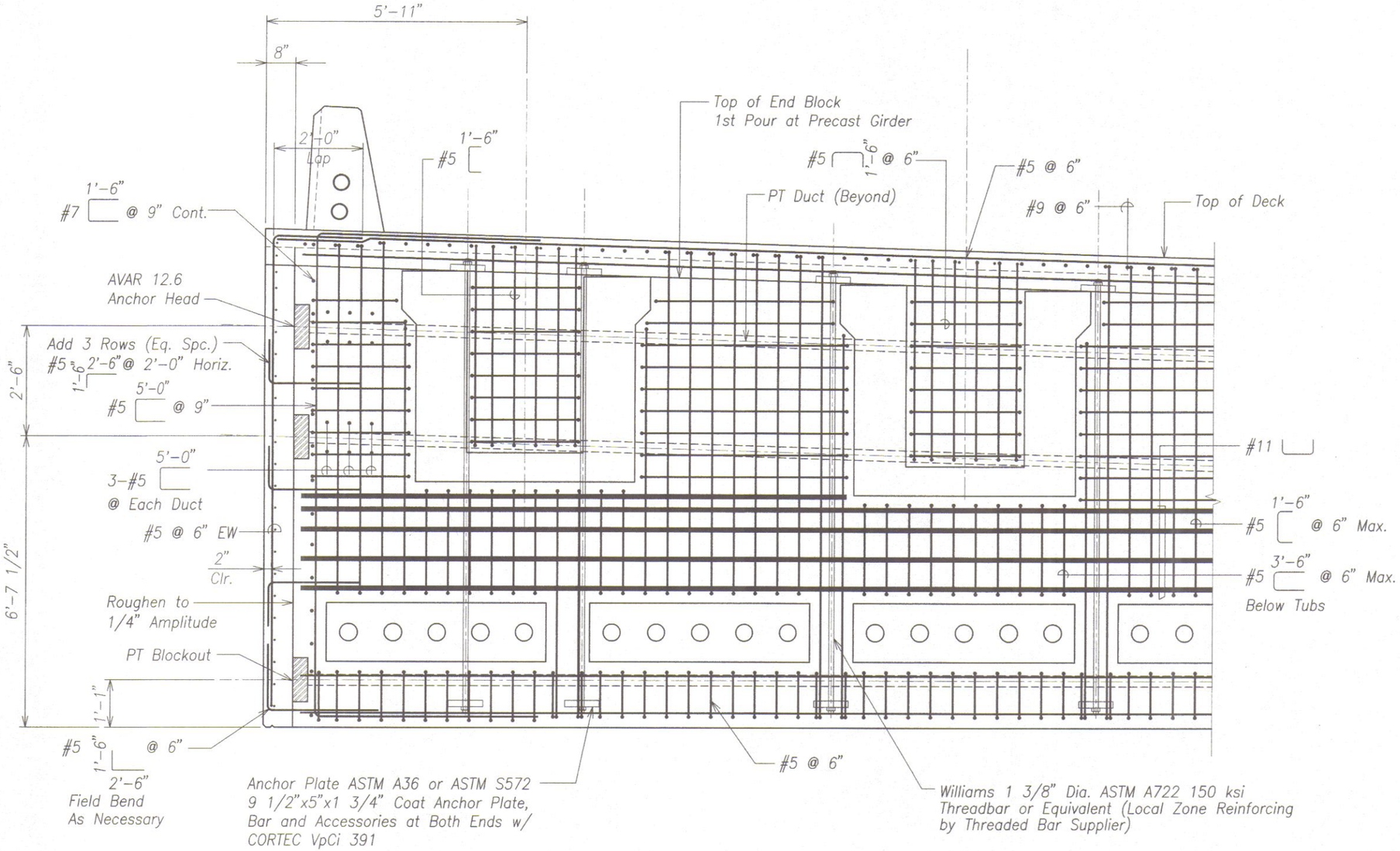

END BLOCK AT ABUTMENT 2 – SECTION A

Scale: 3/4" = 1'-0"

SB10.2 SB11.11

SB11.1, SB11.10

DAVID K. FUJIWARA
LICENSED PROFESSIONAL ENGINEER
NO. 8104-S
HAWAII, U.S.A.

THIS WORK WAS PREPARED BY ME OR UNDER MY SUPERVISION.

KSF, INC. APRIL 30, 2012
LIC. EXP. DATE

STATE OF HAWAII
DEPARTMENT OF TRANSPORTATION
HIGHWAYS DIVISION

END BLOCK AT ABUTMENT 2
SECTION

HONOAPIILANI HIGHWAY REALIGNMENT, PHASE 1A
Future Keawe St Extension to Lahainaluna Rd, Part B
Fed. Aid Proj. No. NH-030-1(35)R

Scale: As Noted Date: June, 2010

SHEET No. SB11.1 OF 11 SHEETS

ORIGINAL PLAN	SURVEY PLOTTED BY	DATE
	DRAWN BY	
NOTE BOOK	TRACED BY	
	DESIGNED BY	
	QUANTITIES BY	
No.	CHECKED BY	

DRAWING NAME: Z:\00 ONGOING\40019.0-HONOAPIILANI LAHAINA BYPASS-KAHOMA WO\06-15-10 COMBINE LAHAINA FINAL DESIGN\HH-SB1111.DWG PLOT TIME: 06-14-10, 8:22 PM

FINAL DESIGN 355

FED. ROAD DIST. NO.	STATE	FED. AID PROJ. NO.	FISCAL YEAR	SHEET NO.	TOTAL SHEETS
HAWAII	HAW.	NH-030-1(35)R	2009	355S-1	383

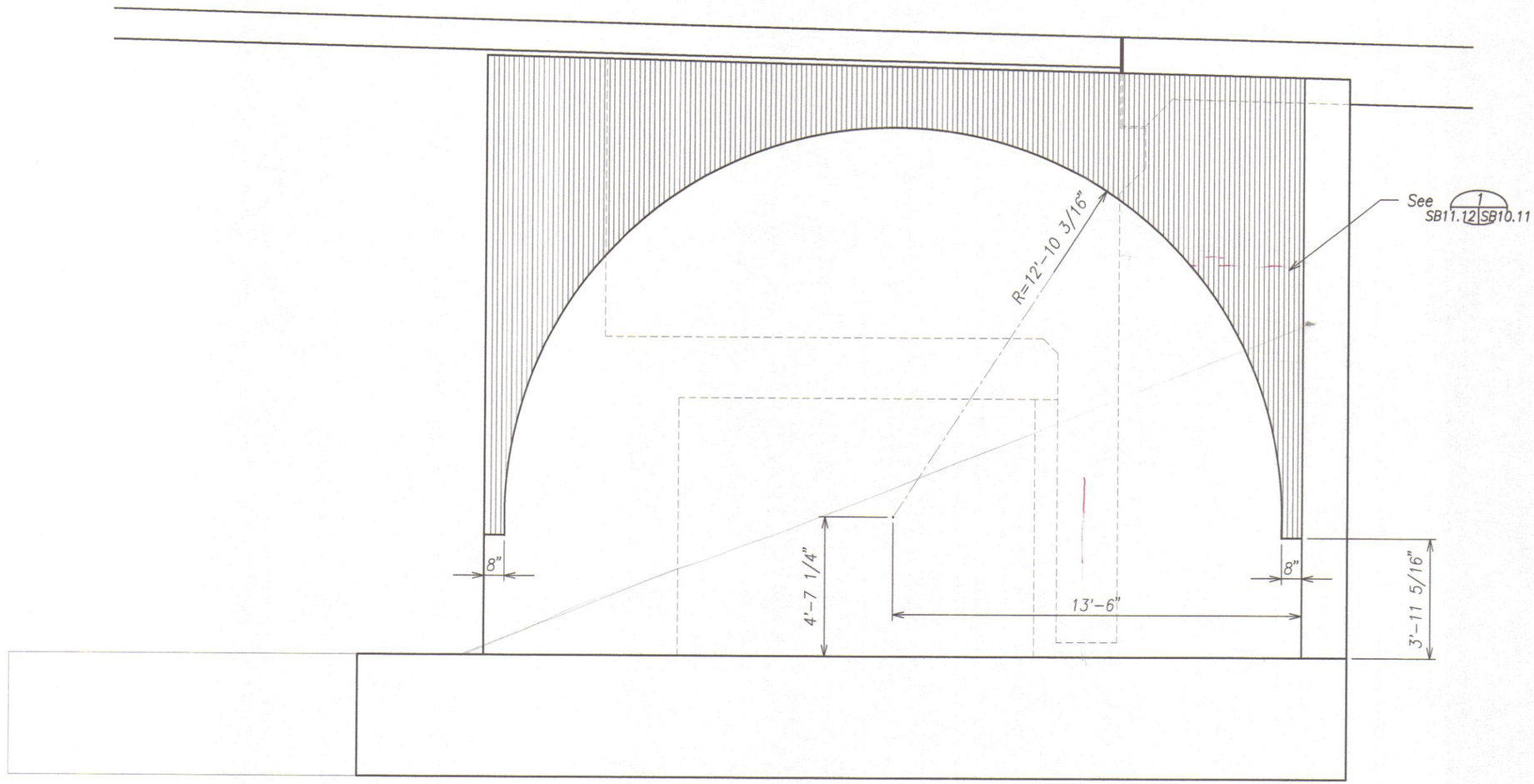

FASCIA WALL ABUTMENT 2 – MAKAI SIDE (A SB9.4 SB11.12)

Scale: 1/2" = 1'-0"

DRAWING NAME: Z:\00 ONGOING\40019.0-HONOAPIILANI LAHAINA BYPASS-KAHOMA WO\03-30-11 EM END BLOCKS\HH-SB1112.DWG PLOT TIME: 03-30-11, 4:25 PM

ORIGINAL PLAN | SURVEY PLOTTED BY | DRAWN BY | TRACED BY | DESIGNED BY | QUANTITIES BY | CHECKED BY | DATE | NOTE BOOK No.

DAVID K. FUJIWARA LICENSED PROFESSIONAL ENGINEER NO. 8104-S HAWAII, U.S.A.

THIS WORK WAS PREPARED BY ME OR UNDER MY SUPERVISION.

KSF, INC. — APRIL 30, 2012 LIC. EXP. DATE

DATE	REVISION

STATE OF HAWAII
DEPARTMENT OF TRANSPORTATION
HIGHWAYS DIVISION

ABUTMENT 2
FASCIA WALL – MAKAI SIDE
HONOAPIILANI HIGHWAY REALIGNMENT, PHASE 1A
Future Keawe St Extension to Lahainaluna Rd, Part B
Fed. Aid Proj. No. NH-030-1(35)R

Scale: As Noted — Date: June, 2010

SHEET No. SB11.12 OF 5 SHEETS

FINAL DESIGN 355S-1

FED. ROAD DIST. NO.	STATE	FED. AID PROJ. NO.	FISCAL YEAR	SHEET NO.	TOTAL SHEETS
HAWAII	HAW.	NH-030-1(35)R	2009	355S-2	383

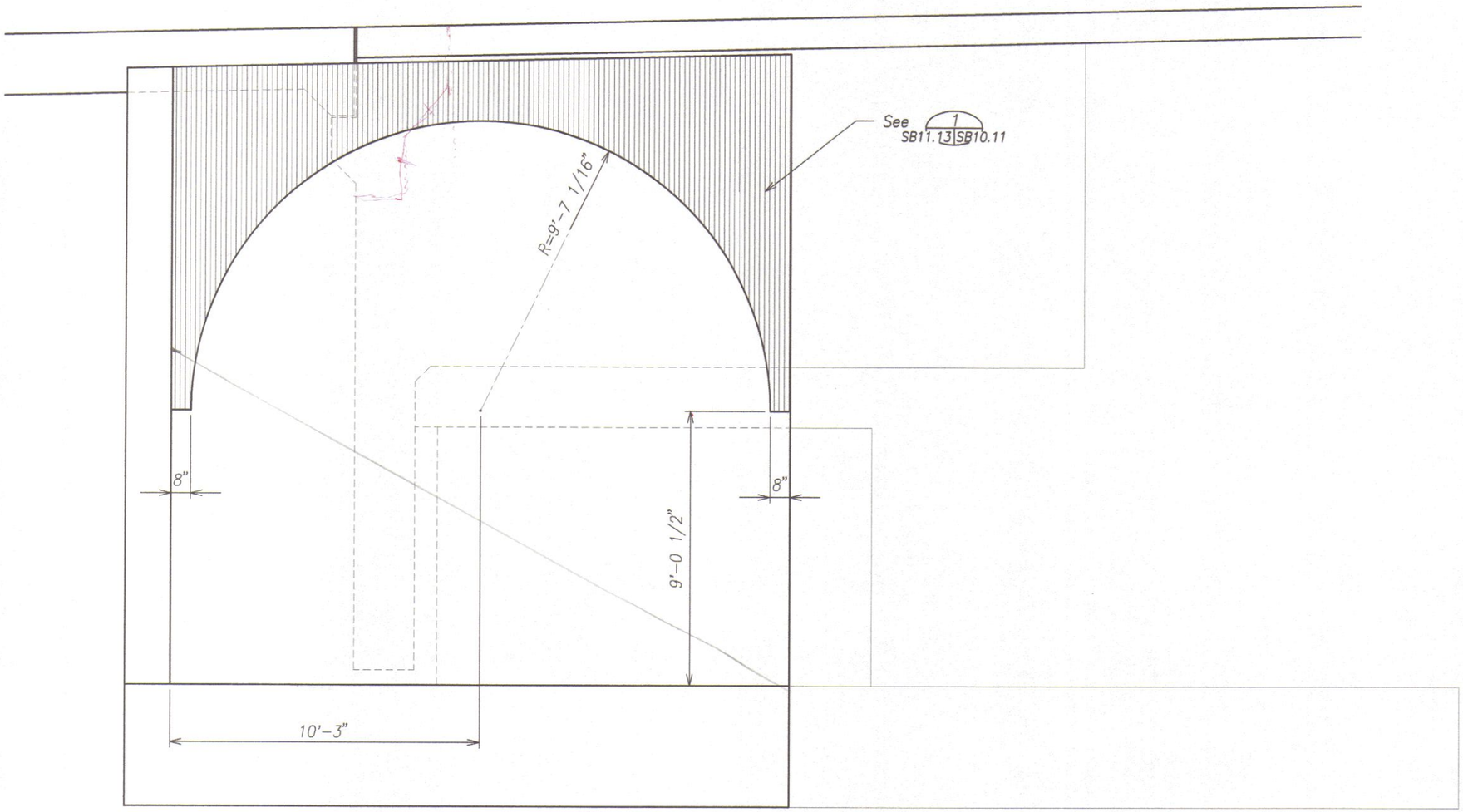

FASCIA WALL ABUTMENT 2 – MAUKA SIDE A SB9.4 SB11.13

Scale: 1/2" = 1'-0"

DRAWING NAME: Z:\00 ONGOING\40019.0-HONOAPIILANI LAHAINA BYPASS-KAHOMA WO\03-30-11 EM END BLOCKS\HH-SB1112.DWG PLOT TIME: 03-30-11, 4:26 PM

ORIGINAL PLAN	SURVEY PLOTTED BY	DATE
	DRAWN BY	
	TRACED BY	
NOTE BOOK	DESIGNED BY	
	QUANTITIES BY	
No.	CHECKED BY	

DATE	REVISION

DAVID K. FUJIMARA LICENSED PROFESSIONAL ENGINEER NO. 8104-S HAWAII, U.S.A.

THIS WORK WAS PREPARED BY ME OR UNDER MY SUPERVISION.

KSF, INC. — APRIL 30, 2012 LIC. EXP. DATE

STATE OF HAWAII
DEPARTMENT OF TRANSPORTATION
HIGHWAYS DIVISION

ABUTMENT 2
FASCIA WALL – MAUKA SIDE
HONOAPIILANI HIGHWAY REALIGNMENT, PHASE 1A
Future Keawe St Extension to Lahainaluna Rd, Part B
Fed. Aid Proj. No. NH-030-1(35)R

Scale: As Noted — Date: June, 2010

SHEET No. SB11.13 OF 5 SHEETS

FINAL DESIGN 355S-2

Refr. Dwg SB12.1

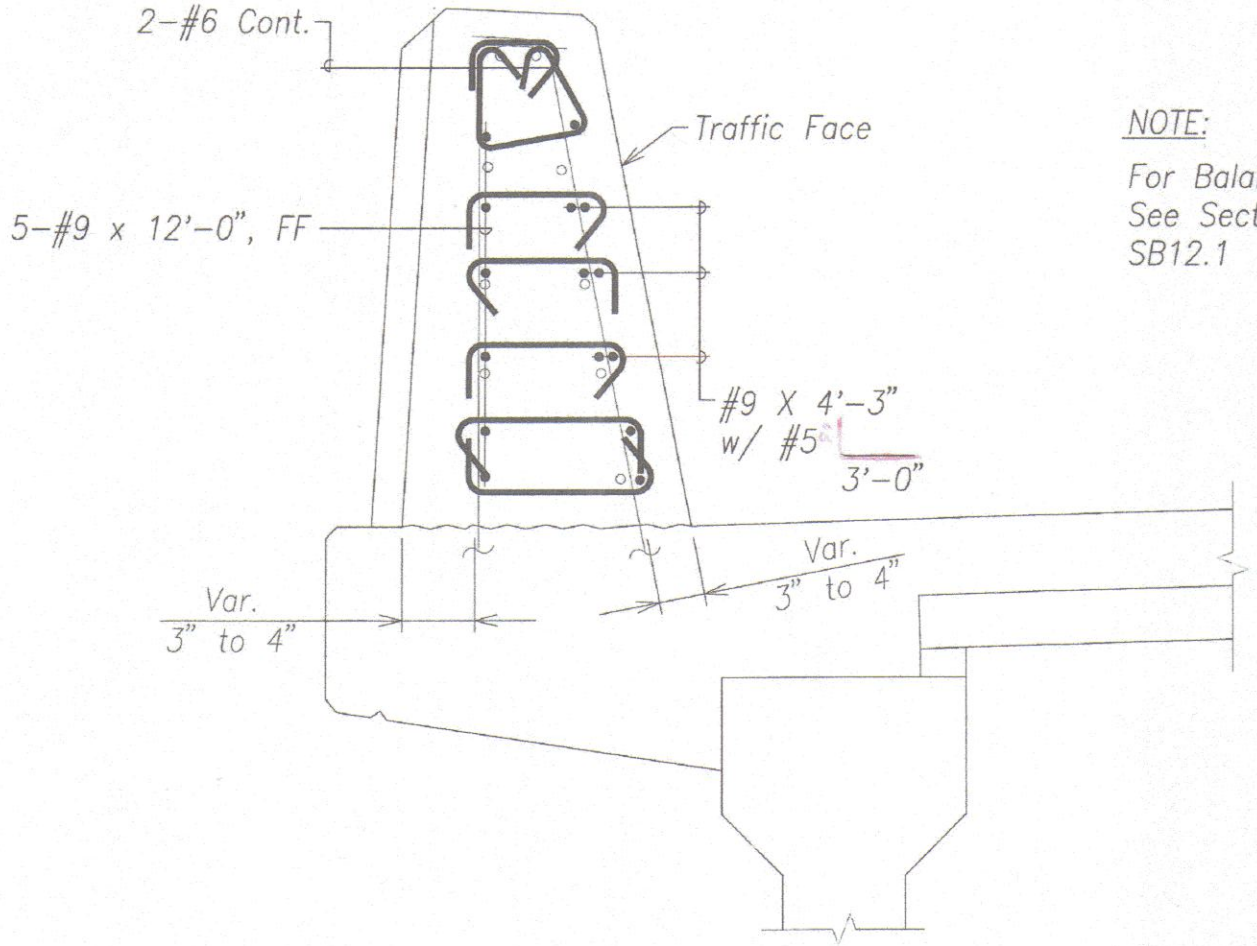

NOTE:

For Balance of Reinforcing See Section A on Sheet SB12.1

TYPICAL BARRIER SECTION (OCEAN SIDE SHOWN)

Scale: 1 1/2" = 1'-0"

SK-BR02 | ~~A~~ B SK-BR02

PROJECT
HONOAPIILANI HIGHWAY REALIGNMENT, PHASE 1A

DRAWING TITLE
TYPICAL BARRIER SECTION AT PULLBOX

DATE:

SHEET
SK-BR02

SCALE: AS SHOWN

DRAWING NAME: Z:\00 ONGOING\40019.0-HONOAPIILANI LAHAINA BYPASS-KAHOMA - HDCC\12-14-12 BARRIER PULLBOX\HH-SB1201BARRIER PULLBOX.DWG PLOT TIME: 12-14-12, 6:32 PM)

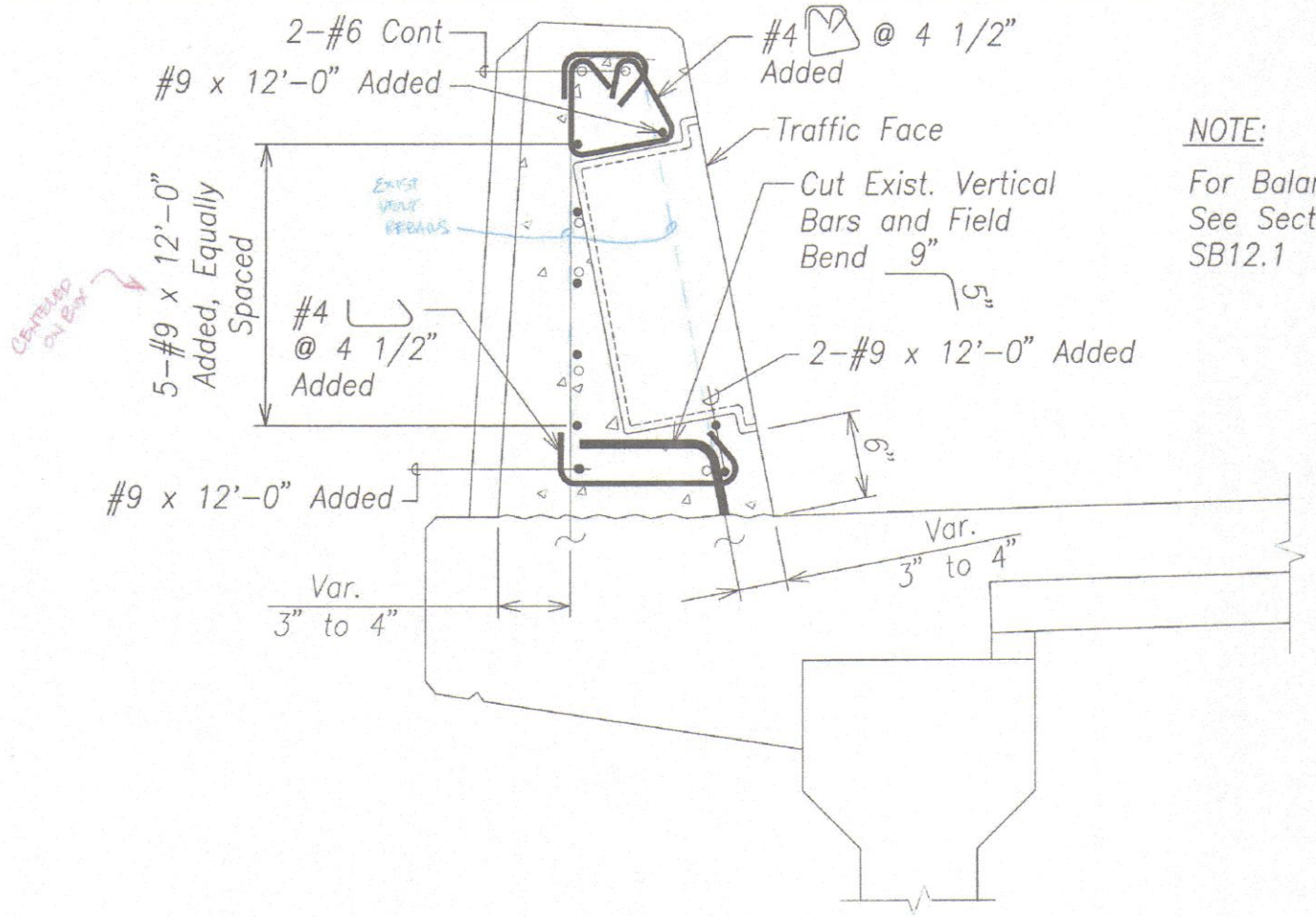

Refr. Dwg SB12.1

NOTE:

For Balance of Reinforcing See Section A on Sheet SB12.1

TYPICAL BARRIER SECTION (OCEAN SIDE SHOWN)

Scale: 1 1/2" = 1'-0"

A
SK-BR01 | SK-BR01

PROJECT
HONOAPIILANI HIGHWAY REALIGNMENT, PHASE 1A

DRAWING TITLE
TYPICAL BARRIER SECTION AT PULLBOX

DATE:

SHEET
SK-BR01

SCALE: AS SHOWN

DRAWING NAME: Z:\00 ONGOING\40019.0-HONOAPIILANI LAHAINA BYPASS-KAANOMA - HDCC\12-14-12 BARRIER PULLBOX\HH-SB1201BARRIER PULLBOX.DWG PLOT TIME: 12-14-12, 6:32 PM)

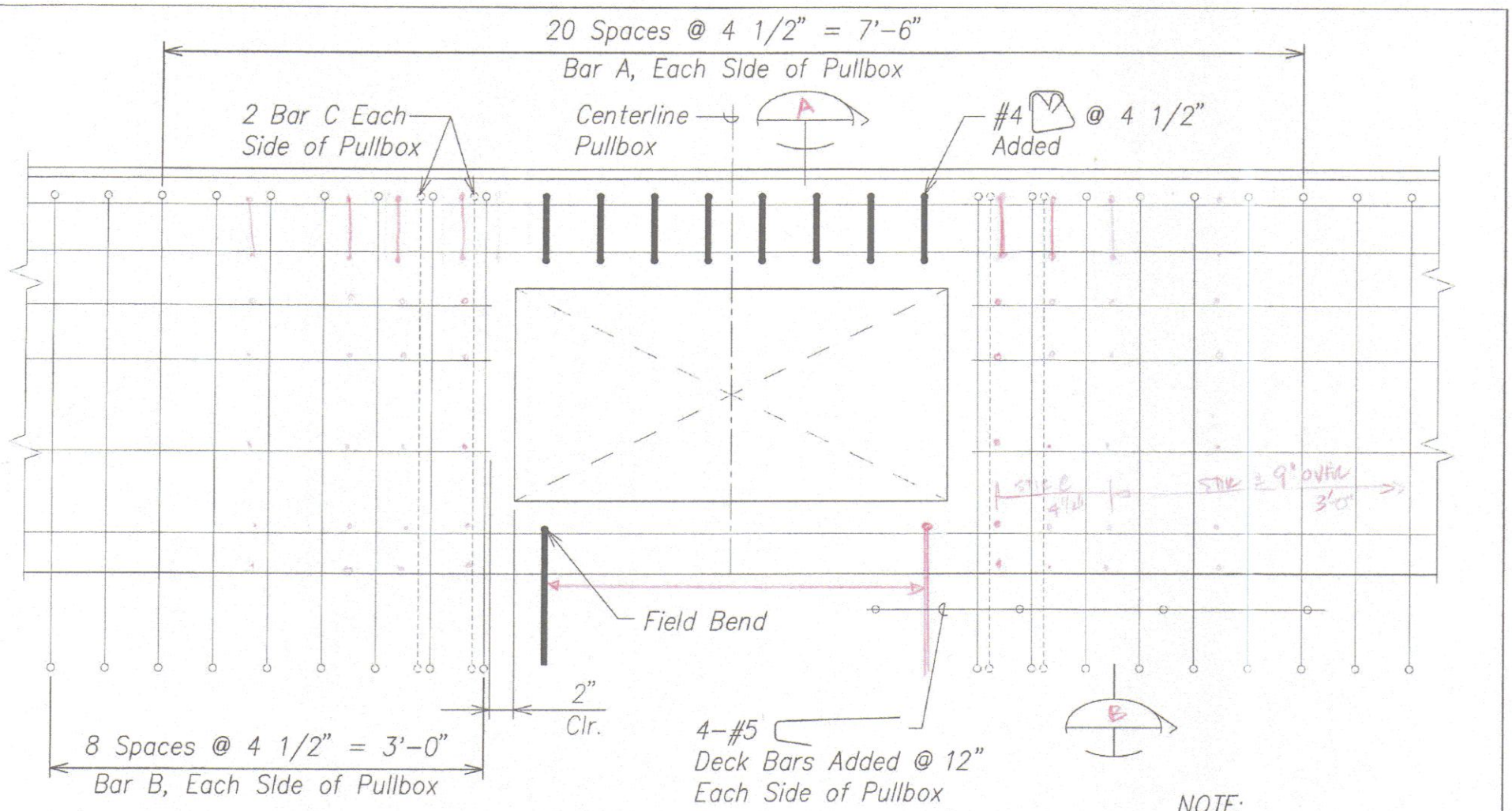

SECTION AT PULLBOX A

SCALE: 1 1/2" = 1'-0"

SK0.1 | SK0.2

NOTE:

Traffic Face of Barrier is Shown.

PROJECT

HONOAPIILANI HIGHWAY REALIGNMENT, PHASE 1A

DRAWING TITLE

CONDUIT PULLBOX AT RAILING

DATE: Dec. 17, 2012

SHEET

SK0.2

SCALE: 1 1/2" = 1'-0"

DRAWING NAME: Z:\DD ONGOING\40019.0-HONOAPIILANI LAHAINA BYPASS-KAHOMA - HDCC\12-14-12 BARRIER PULLBOX\HH-SB1200 RAILG CONDUIT 12-14-12.DWG PLOT TIME: 12-14-12, 6:32 PM)

FED. ROAD DIST. NO.	STATE	FED. AID PROJ. NO.	FISCAL YEAR	SHEET NO.	TOTAL SHEETS
HAWAII	HAW.	NH-030-1(35)R	2009	356	383

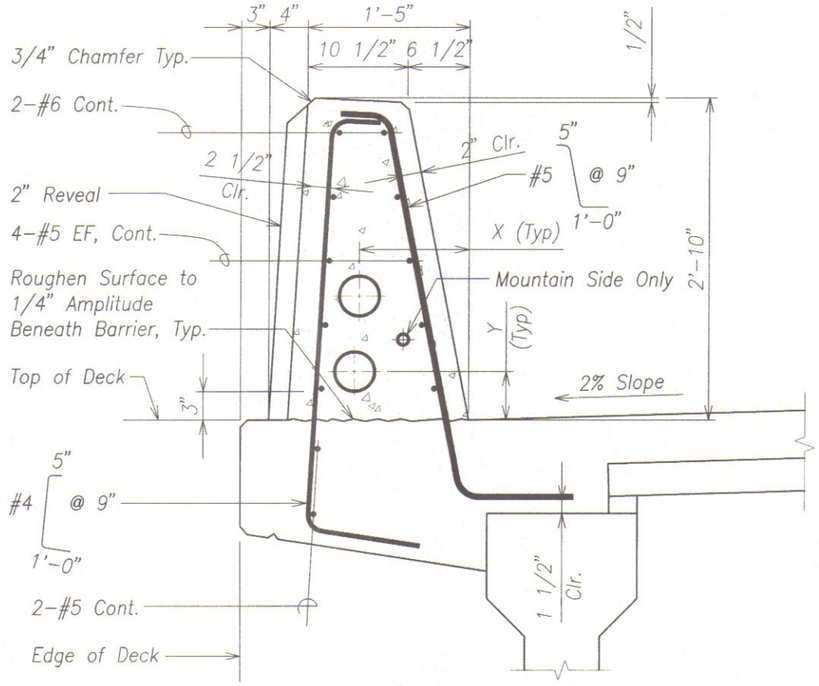

TYPICAL BARRIER SECTION (OCEAN SIDE SHOWN) (A SB12.1 | SB12.1)

Scale: 1 1/2" = 1'-0"

CONDUIT PLACEMENT			
DIA.	TYPE	X	Y
1"	HL	7"	9"
4"	C	1'-0"	5"
4"	C	1'-0"	1'-1"

NOTES:

1. Work this drawing with Sheet SB12.2.
2. See Sheet SB3.3 for Deck reinforcing.

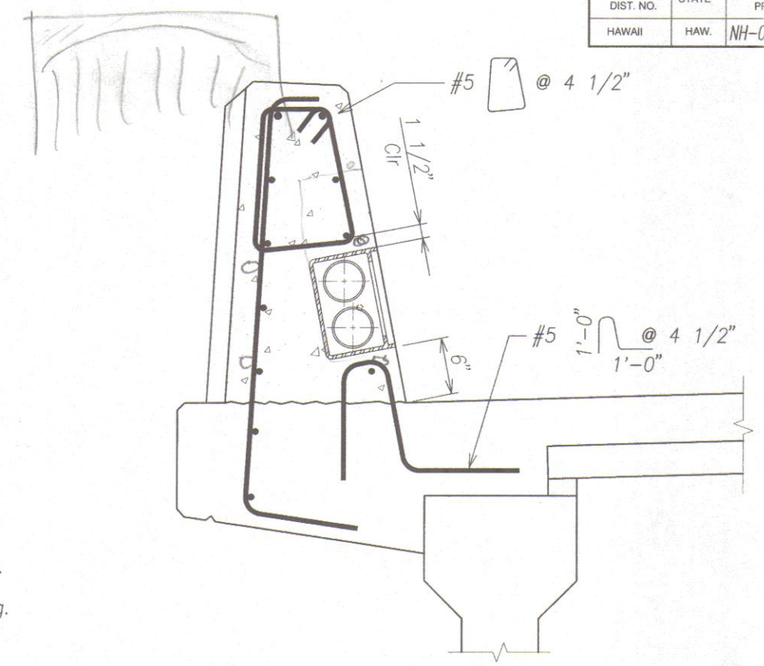

SECTION COMMUNICATION JUNCTION BOX (B SB12.1 | SB12.1)

Scale: 1 1/2" = 1'-0"

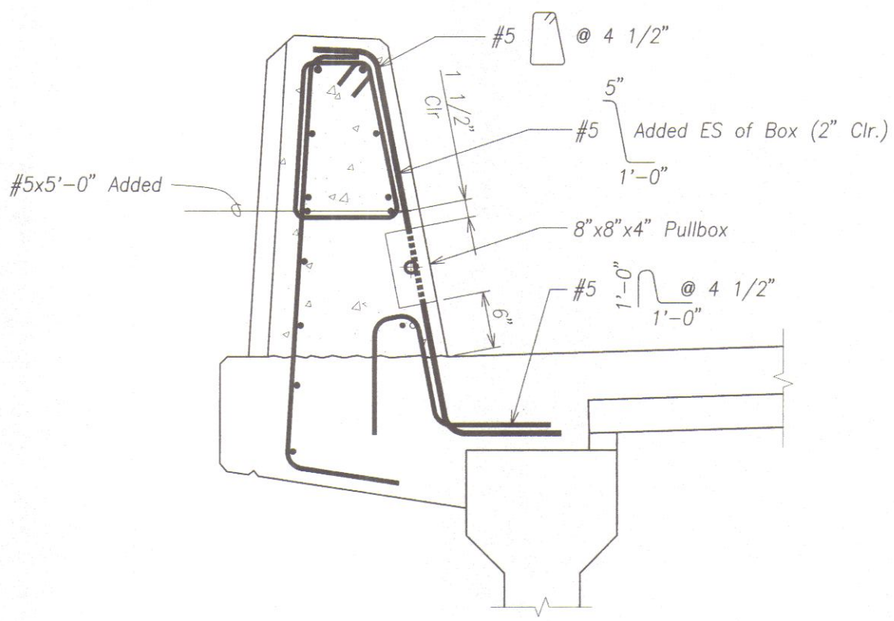

SECTION AT HIGHWAY LIGHTING PULLBOX (C SB12.1 | SB12.1)

Scale: 1 1/2" = 1'-0"

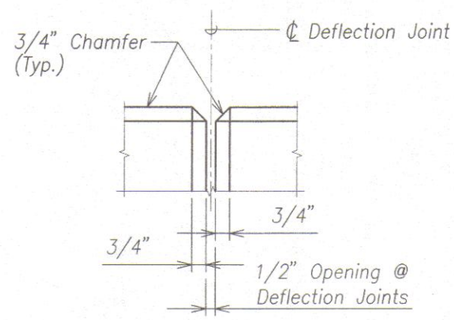

DEFLECTION JOINT DETAIL (1 SB12.1 | SB12.1)

Scale: 3" = 1'-0"

DAVID K. FUJIMARA LICENSED PROFESSIONAL ENGINEER NO. 8104-S HAWAII, U.S.A.

THIS WORK WAS PREPARED BY ME OR UNDER MY SUPERVISION.

David K. Fujimara APRIL 30, 2012
KSF, INC. LIC. EXP. DATE

STATE OF HAWAII
DEPARTMENT OF TRANSPORTATION
HIGHWAYS DIVISION

CONCRETE RAILING SECTIONS AND DETAIL

HONOAPIILANI HIGHWAY REALIGNMENT, PHASE 1A
Future Keawe St Extension to Lahainaluna Rd, Part B
Fed. Aid Proj. No. NH-030-1(35)R

Scale: As Noted Date: June, 2010

SHEET No. SB12.1 OF 4 SHEETS

00GO SHEET

FINAL DESIGN 356

ORIGINAL PLAN	SURVEY PLOTTED BY	DATE
	DRAWN BY	
NOTE BOOK	TRACED BY	
	DESIGNED BY	
No.	QUANTITIES BY	
	CHECKED BY	

DRAWING NAME: Z:\00 ONGOING\40019.0-HONOAPIILANI LAHAINA BYPASS-KAHOMA WO\06-15-10 COMBINE LAHAINA FINAL DESIGN\HH-SB1201.DWG PLOT TIME: 06-14-10, 8:22 PM)

FED. ROAD DIST. NO.	STATE	FED. AID PROJ. NO.	FISCAL YEAR	SHEET NO.	TOTAL SHEETS
HAWAII	HAW.	NH-030-1(35)R	2009		383

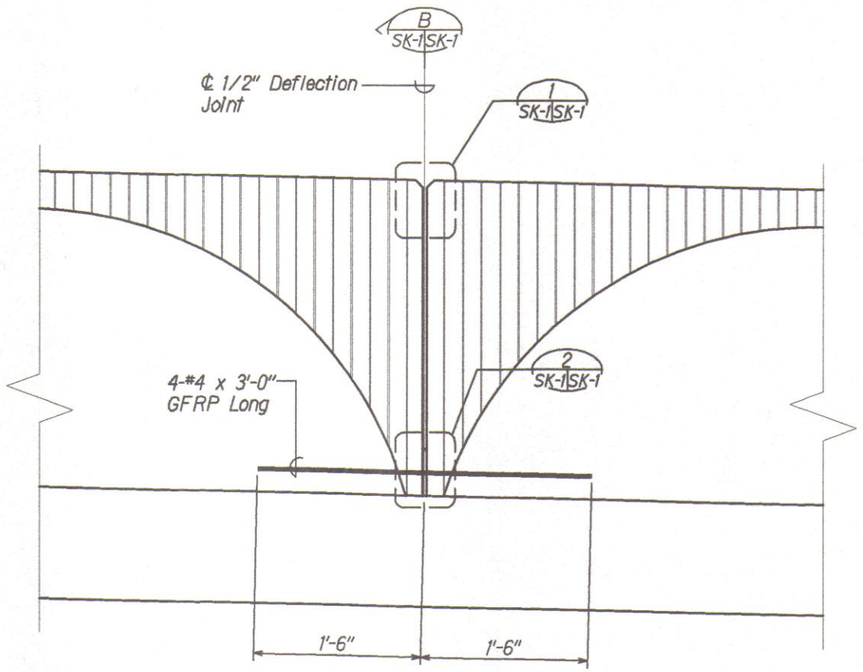

RAILING ELEVATION AT DEFLECTION JOINT (A / SK-1 SK-1)
Scale: 1 1/2" = 1'-0"

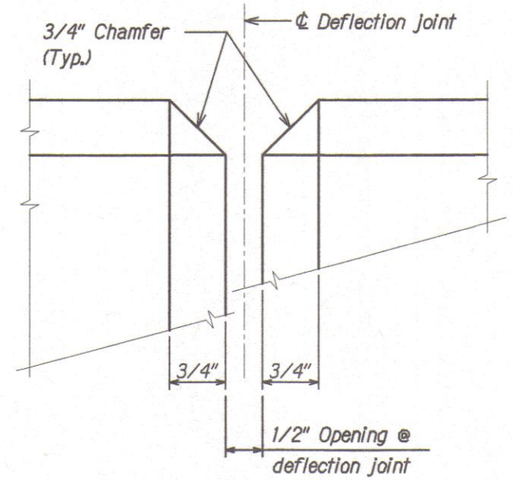

JOINT DETAIL (1 / SK-1 SK-1)
Scale: 12" = 1'-0"

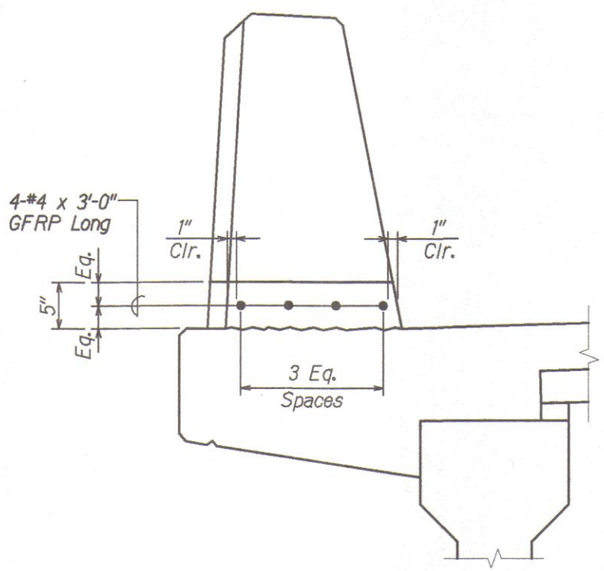

SECTION AT DEFLECTION JOINT (B / SK0.1 SK0.1)
Scale: 1 1/2" = 1'-0"

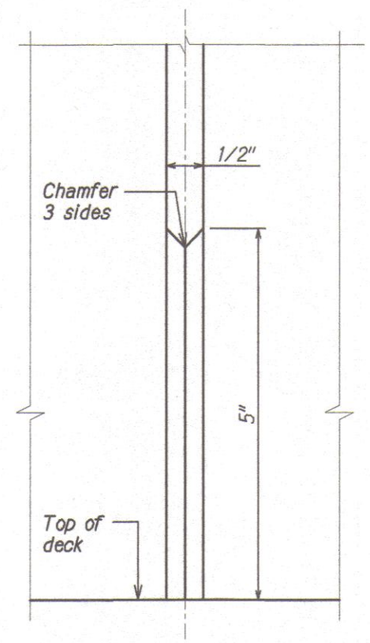

JOINT DETAIL (2 / SK-1 SK-1)
Scale: 12" = 1'-0"

THIS WORK WAS PREPARED BY ME OR UNDER MY SUPERVISION.

KSF, INC. — APRIL 30, 2012 LIC. EXP. DATE

STATE OF HAWAII
DEPARTMENT OF TRANSPORTATION
HIGHWAYS DIVISION

KAHOMA STREAM BRIDGE
DEFLECTION JOINT DETAILS
HONOAPIILANI HIGHWAY REALIGNMENT, PHASE 1A
Future Keawe St Extension to Lahainaluna Rd, Part B
Fed. Aid Proj. No. NH-030-1(35)R

Scale: As Noted — Date: Sept. 18, 2012

SHEET No. SK-01 OF SHEETS

DATE	REVISION

ADDED.

DRAWING NAME: Z:\00 ONGOING\40019.0-HONOAPIILANI LAHAINA BYPASS-KAHOMA - HDOC\09-27-12 REV ENDBLOCK\HI-SB1200 FORM LINER.DWG PLOT TIME: 09-27-12, 2:53 PM

CONCEPTUAL PLAN — NOT FOR CONSTRUCTION

SURVEY PLOTTED BY ____ DATE ____
DRAWN BY ____
TRACED BY ____
DESIGNED BY ____
QUANTITIES BY ____
CHECKED BY ____

FED. ROAD DIST. NO.	STATE	PROJ. NO.	FISCAL YEAR	SHEET NO.	TOTAL SHEETS
HAWAII	HAW.	NH-030-1(38)	2010	00	-

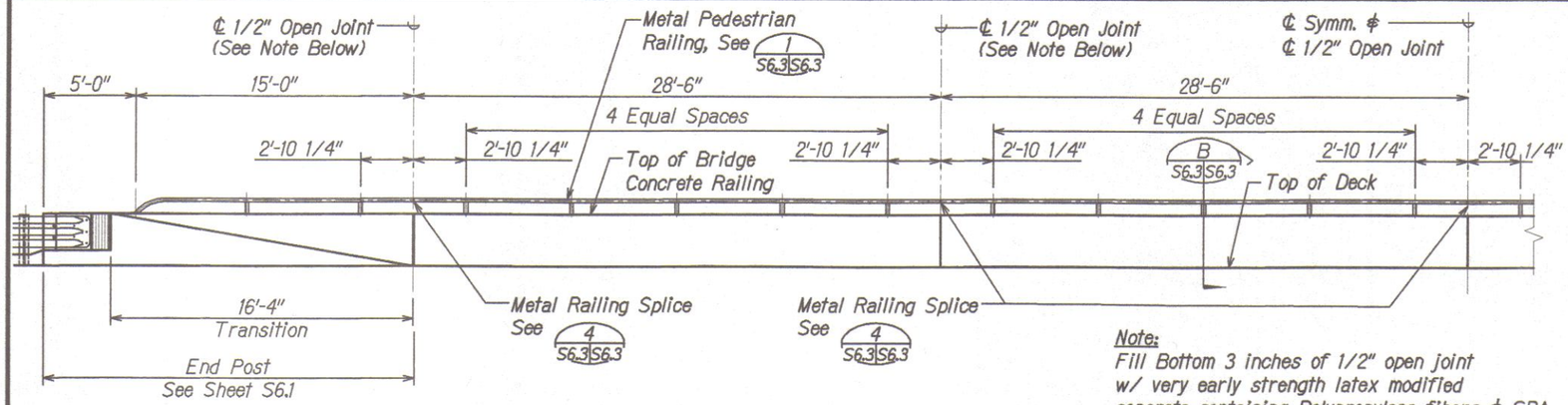

Note:
Fill Bottom 3 inches of 1/2" open joint w/ very early strength latex modified concrete containing Polypropylene fibers ⊕ SRA.

TYPICAL RAILING ELEVATION (A S6.3 S6.3)
Scale: 1/4" = 1'-0"

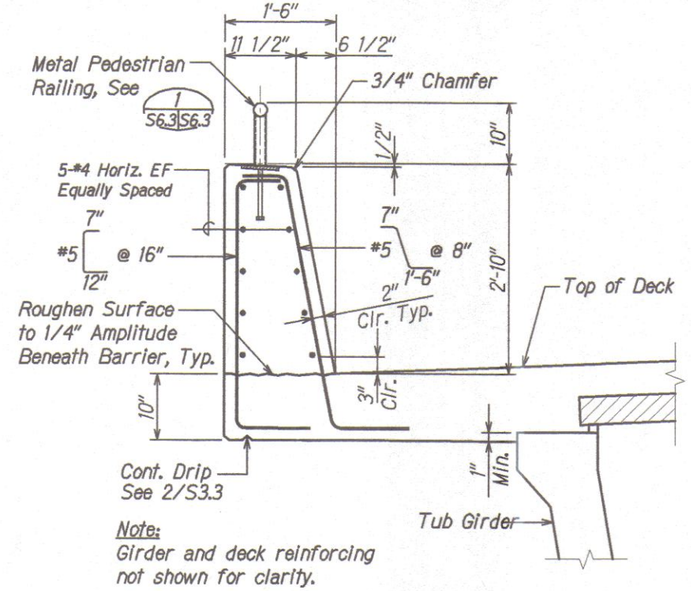

Note:
Girder and deck reinforcing not shown for clarity.

TYPICAL RAILING SECTION (B S6.3 S6.3)
Scale: 1" = 1'-0"

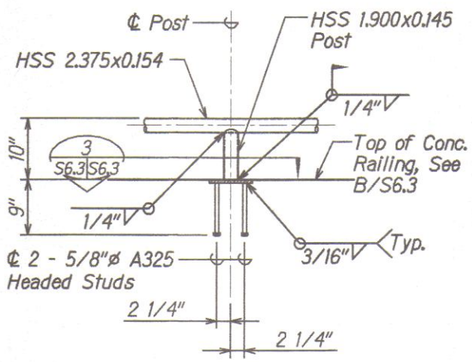

TYPICAL RAILING POST CONNECTION (1 S6.3 S6.3)
Scale: 1" = 1'-0"

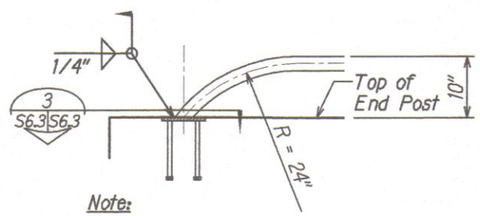

Note:
For balance of information, See 1/S6.3

TYPICAL RAILING POST CONNECTION AT END POST (2 S6.3 S6.3)
Scale: 1" = 1'-0"

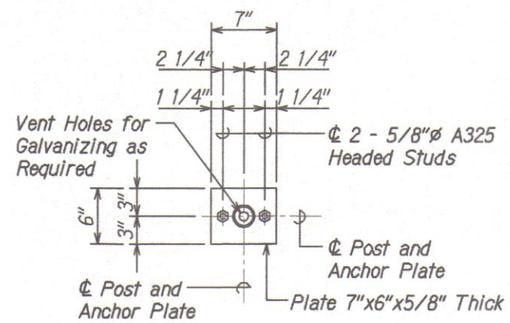

TYPICAL RAILING ANCHOR PLATE DETAIL (3 S6.3 S6.3)
Scale: 1 1/2" = 1'-0"

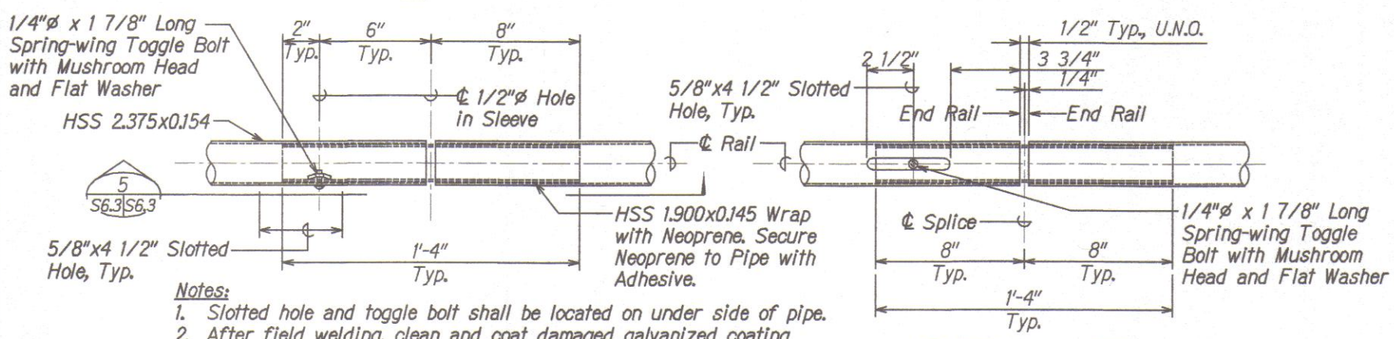

Notes:
1. Slotted hole and toggle bolt shall be located on under side of pipe.
2. After field welding, clean and coat damaged galvanized coating according to Specs. Sect. 501.03 (GX2).
3. Metal pedestrian railing shall be painted according to paint schedule and notes, See original contract documents on plan sheet 114 (Sheet No, S1.1 of 54 sheets)

SECTION (5 S6.3 S6.3)
Scale: 3" = 1'-0"

TYPICAL RAILING ANCHOR PLATE DETAIL (4 S6.3 S6.3)
Scale: 3" = 1'-0"

STATE OF HAWAII
DEPARTMENT OF TRANSPORTATION
HIGHWAYS DIVISION

BRIDGE RAILING ELEVATION, SECTIONS AND DETAILS

~~HONOAPIILANI HIGHWAY REALIGNMENT PHASE 1B-1~~
~~Lahainaluna Rd. to Hokiokio Pl.~~
~~Federal-Aid Project No. NH-030-1(38)~~

Scale: As Shown — Date: Dec. 28, 2011

SHEET No. ~~S6.3~~ OF SHEETS

ADDED

00

ORIGINAL PLAN | SURVEY PLOTTED BY | DRAWN BY | TRACED BY | DESIGNED BY | QUANTITIES BY | CHECKED BY | REVISE BOXES | No. | DATE

DRAWING NAME: Z:\00 ONGOING\11-025-HONOAPIILANI KAUAULA STR BR\CAD\02-14-13 EM GIRDER CARBONFIBER\KSR-S603.DWG PLOT TIME: 02-28-13, 5:42 PM

GALVANIZED AFTER FABRICATION

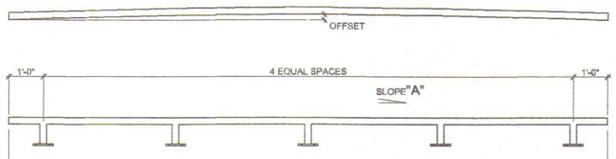

		SLOPE - 12" "A"	"B"	OFFSET
B	17'-7½"	¼"	⅜"	¼"
C	21'-9"	¼"	½"	¼"
D	21'-1"	¼"	½"	⅝"
E	21'-1¼"	¼"	⅜"	⅝"
F	21'-0"	¼"	½"	⅝"
G	21'-2¼"	¼"	⅜"	¼"
H	21'-1¼"	¼"	⅜"	⅝"
I	21'-1½"	¼"	⅜"	½"
J	21'-1"	¼"	¼"	¾"
K	21'-1"	⅜"	⅜"	¾"
L	21'-1½"	¼"	¼"	½"
M	21'-1¼"	⅜"	⅜"	½"
N	21'-2"	¼"	¼"	½"
O	21'-0¼"	¼"	¼"	¾"
P	21'-1"	⅜"	⅜"	½"
Q	21'-1½"	⅛"	½"	¼"
R	21'-9¼"	¼"	⅜"	¼"
S	17'-2½"	¼"	⅜"	

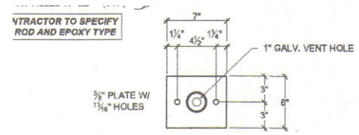

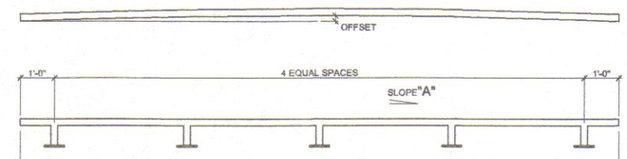

		SLOPE - 12" "A"	"B"	OFFSET
2	26'-4"	¼"	⅝"	
3	21'-7½"	¼"	¼"	¼"
4	20'-10½"	¼"	¼"	¼"
5	21'-1⅝"	¼"	¼"	½"
6	21'-1¾"	¼"	¼"	½"
7	13'-7¾"	¼"	¼"	⅜"
8	13'-11½"	¼"	¼"	½"
9	14'-2½"	¼"	¼"	¼"
10	21'-1"	¼"	¼"	¼"
11	21'-0½"	¼"	⅛"	¼"
12	21'-1¼"	⅜"	¼"	⅜"
13	14'-0¾"	¼"	¼"	⅝"
14	13'-9⅜"	⅜"	¼"	⅛"
15	14'-2⅜"	¼"	¼"	⅛"
16	21'-1½"	¼"	¼"	⅛"
17	21'-1¾"	⅜"	¼"	⅛"
18	21'-2"	½"	¼"	⅜"
19	21'-0¾"	¼"	¼"	⅝"
20	14'-1"	¼"	¼"	¼"
21	32'-0"	¼"	⅜"	⅛"

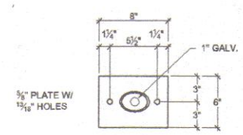

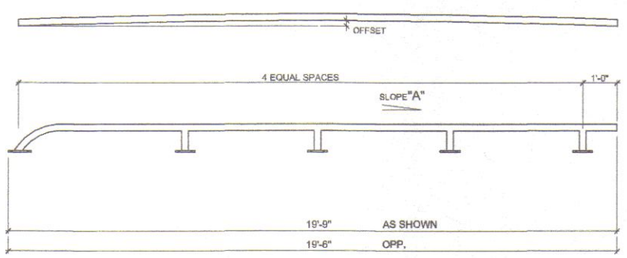

			SLOPE - 12" "A"	"B"	OFFSET
A	19'-9"	AS SHOWN	½"	⅜"	
T	19'-6"	OPP.	¼"		

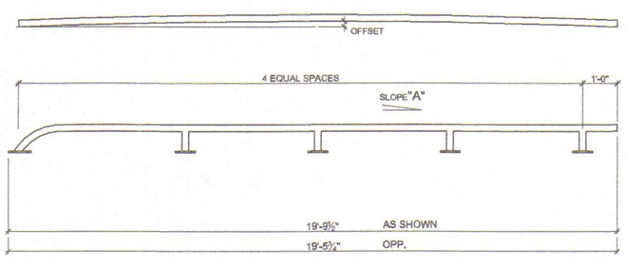

			SLOPE - 12" "A"	"B"	OFFSET
1	19'-9½"	AS SHOWN	⅛"	⅛"	
22	19'-5¾"	OPP.	¼"	⅛"	

REVISIONS

MAUI BRIDGE RAIL

HONOPIILANI HIGHWAY

KWL SERVICES, INC.
94-092 LEOKANE STREET WAIPAHU, HAWAII, 96797
PHONE NO. 676-1808 FAX NO. 677-4081

DESIGN BY: D.H.
DATE: APRIL 10,2013
SCALE:

A1

SHOP DRAWING ADDED.

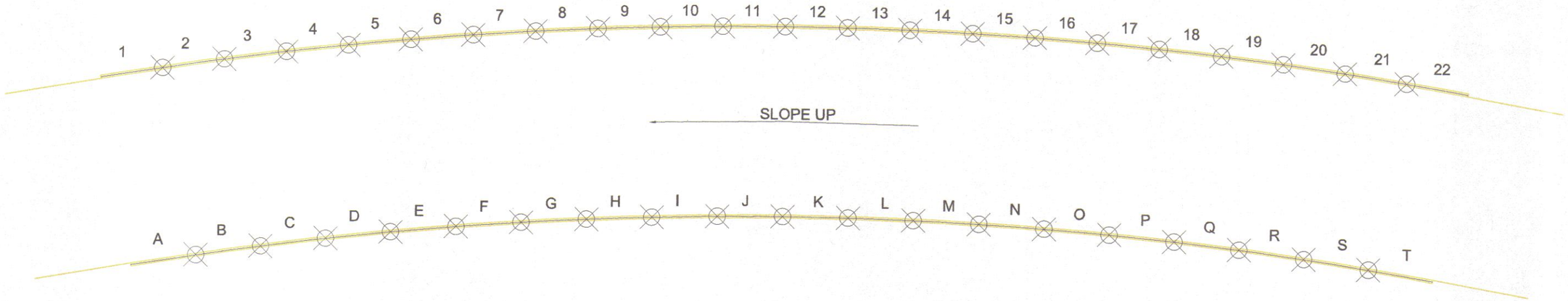

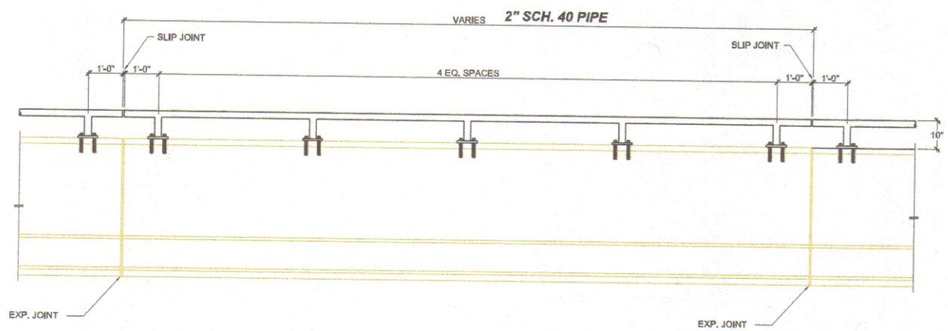

TYPICAL RAILING ELEVATION
½" = 1'-0"

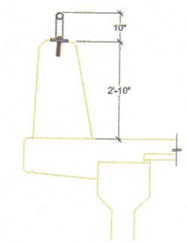

SECTION VIEW

GALVANIZED AFTER FABRICATION

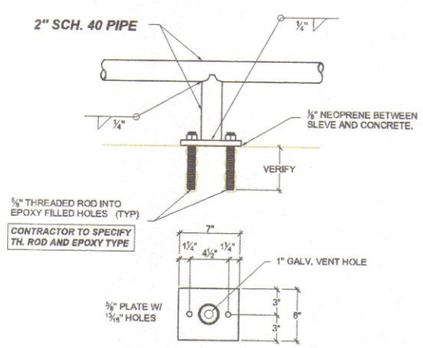

TYPICAL RAILING POST DETAILS
1½" = 1'-0"

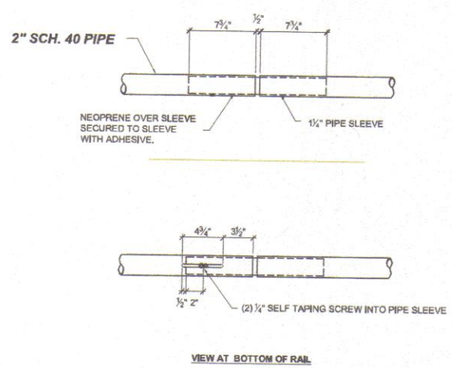

VIEW AT BOTTOM OF RAIL

TYPICAL RAILING SPLICE DETAILS AT SLIP JOINT
1½" = 1'-0"

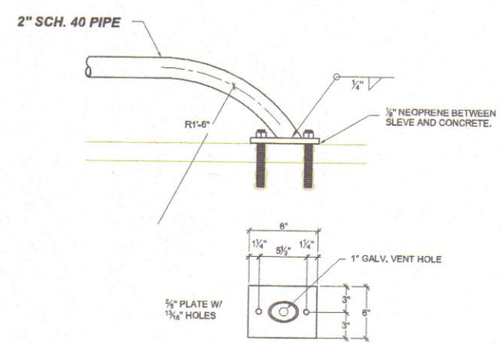

TYPICAL RAILING END DETAILS
1½" = 1'-0"

430 Holes/bats
3/4" x 8" max.

REVISIONS

MAUI BRIDGE RAIL

HONOPIILANI HIGHWAY

KWL SERVICES, INC.
94-082 LEOKANE STREET WAIPAHU, HAWAII, 96797
PHONE NO. 676-1808 FAX NO. 677-4081

DRAWN BY: D.H.
DATE: APRIL 10,2013
SCALE:

A1

FED. ROAD DIST. NO.	STATE	FED. AID PROJ. NO.	FISCAL YEAR	SHEET NO.	TOTAL SHEETS
HAWAII	HAW.	NH-030-1(35)R	2009	357	383

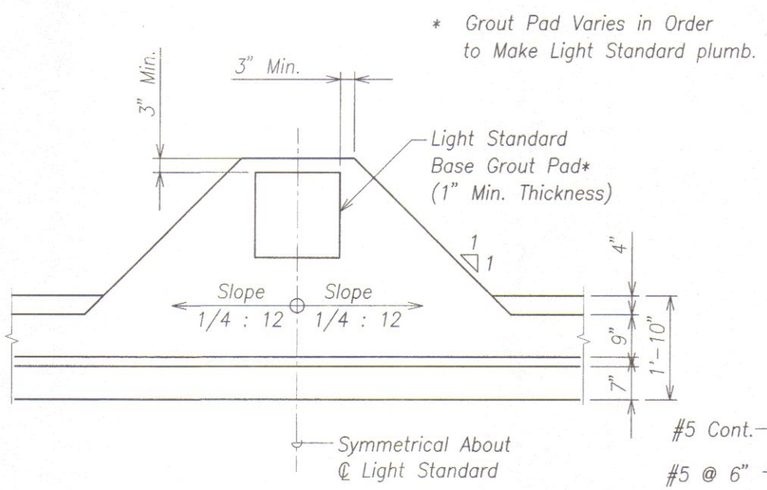

PLAN – THICKENED PARAPET AT LIGHT STANDARD (A SB12.2 | SB12.2)
Scale: 3/4" = 1'-0"

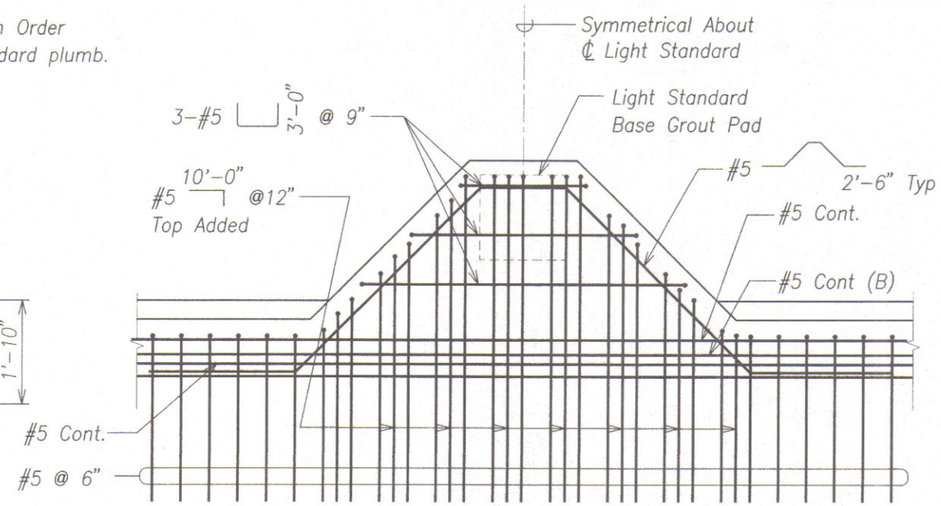

DECK REINFORCING AT LIGHT STANDARD (B SB12.2 | SB12.2)
Scale: 3/4" = 1'-0"

NOTE:
#4 ◻ @ 6" not shown for clarity.

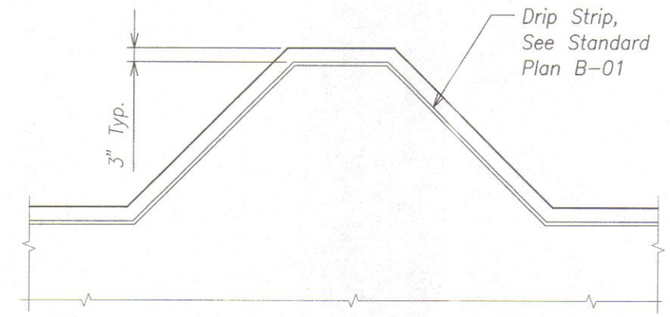

DRIP STRIP DETAIL AT LIGHT STANDARD (LOOKING AT SOFFIT) (C SB12.2 | SB12.2)
Scale: 3/4" = 1'-0"

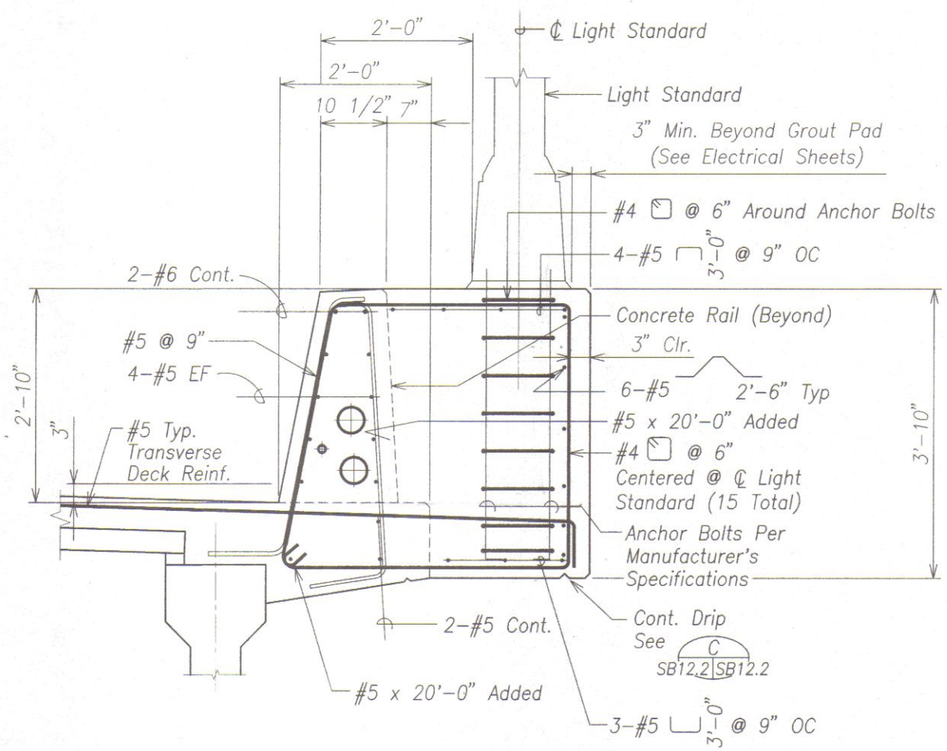

PARAPET THICKENED PARAPET AT LIGHT STANDARD (D SB12.2 | SB12.2)
Scale: 1/2" = 1'-0"

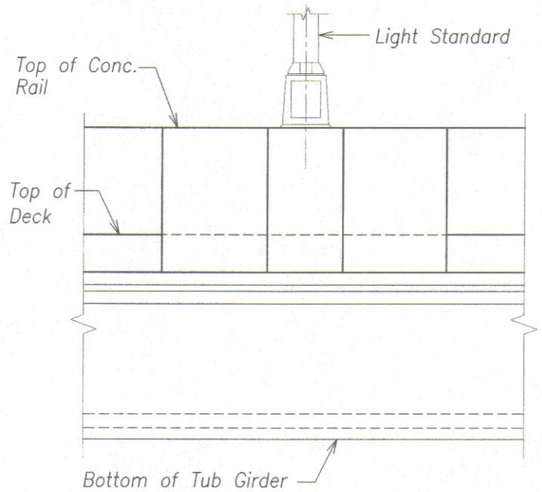

ELEVATION – THICKENED PARAPET AT LIGHT STANDARD (E SB12.2 | SB12.2)
Scale: 1/2" = 1'-0"

TYPICAL NOTE:
Deck reinforcing not shown for clarity.

DAVID K. FUJIWARA LICENSED PROFESSIONAL ENGINEER NO. 8104-S HAWAII, U.S.A.

THIS WORK WAS PREPARED BY ME OR UNDER MY SUPERVISION.
KSF, INC. APRIL 30, 2012 LIC. EXP. DATE

STATE OF HAWAII
DEPARTMENT OF TRANSPORTATION
HIGHWAYS DIVISION

THICKENED PARAPET AT LIGHT STANDARD SECTIONS
HONOAPIILANI HIGHWAY REALIGNMENT, PHASE 1A
Future Keawe St Extension to Lahainaluna Rd, Part B
Fed. Aid Proj. No. NH-030-1(35)R
Scale: As Noted Date: June, 2010

SHEET No. SB12.2 OF 4 SHEETS

ORIGINAL PLAN | SURVEY PLOTTED BY | DRAWN BY | TRACED BY | DESIGNED BY | QUANTITIES BY | CHECKED BY | DATE
NOTE BOOK No.

DRAWING NAME: Z:\00 ONGOING\40019.0-HONOAPIILANI LAHAINA BYPASS-KAHOMA WO\06-15-10 COMBINE LAHAINA FINAL DESIGN\HH-SB1202.DWG PLOT TIME: 06-14-10, 8:23 PM)

FED. ROAD DIST. NO.	STATE	FED. AID PROJ. NO.	FISCAL YEAR	SHEET NO.	TOTAL SHEETS
HAWAII	HAW.	NH-030-1(35)R	2009	358	383

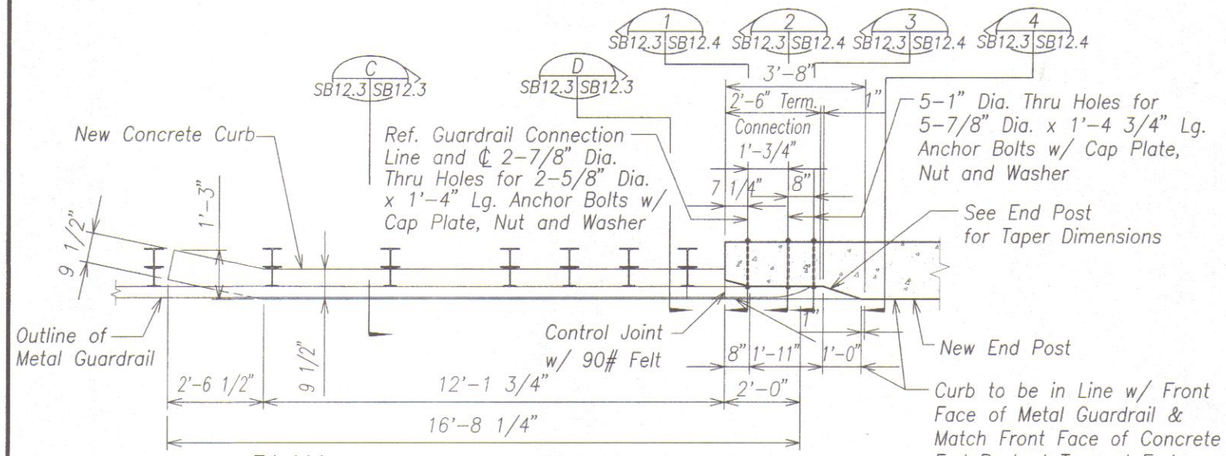

PLAN A SB12.3 SB12.3
Scale: 1/2" = 1'-0"

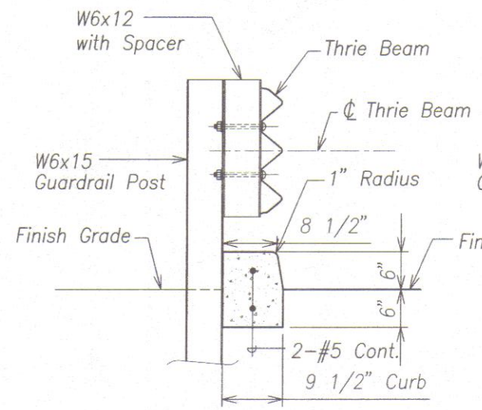

SECTION C SB12.3 SB12.3
Scale: 1" = 1'-0"

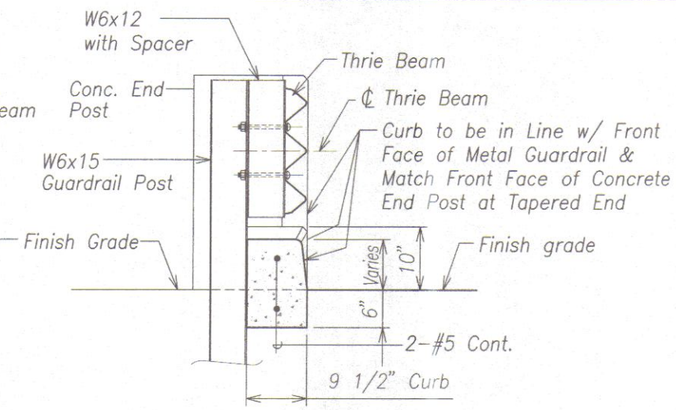

SECTION D SB12.3 SB12.3
Scale: 1" = 1'-0"

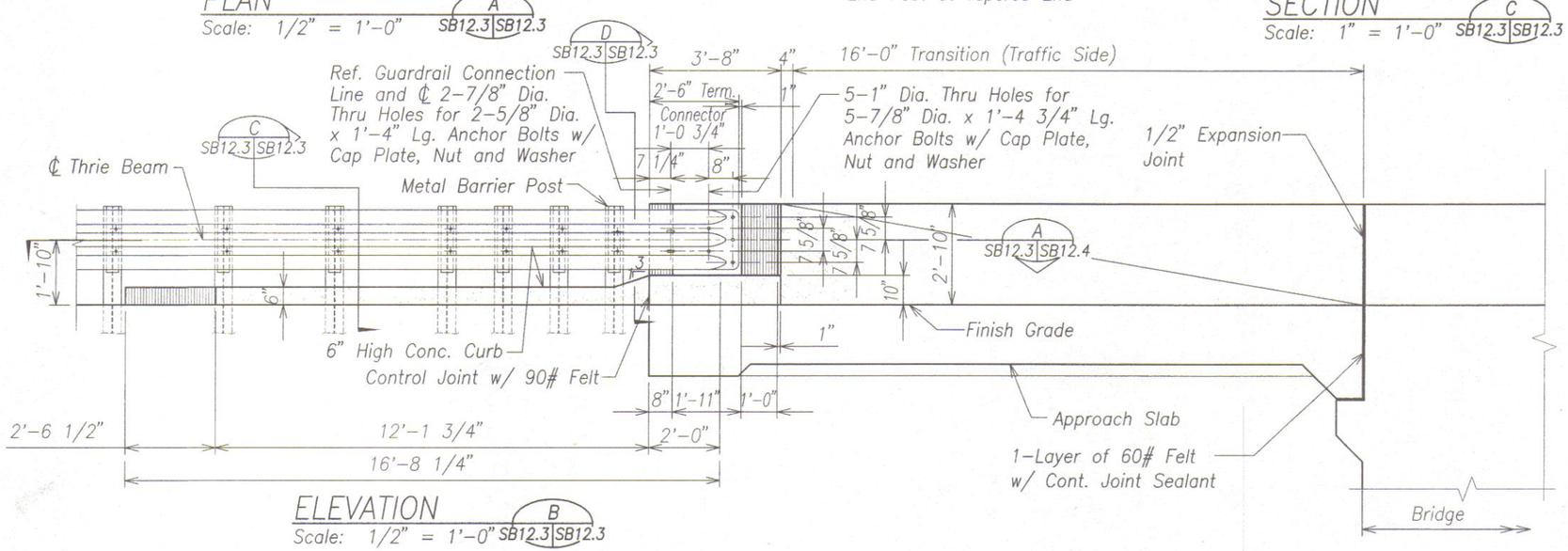

ELEVATION B SB12.3 SB12.3
Scale: 1/2" = 1'-0"

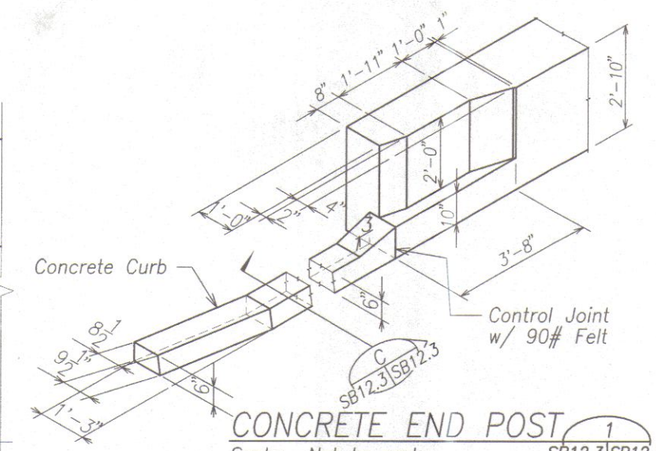

CONCRETE END POST 1 SB12.3 SB12.3
Scale: Not to scale

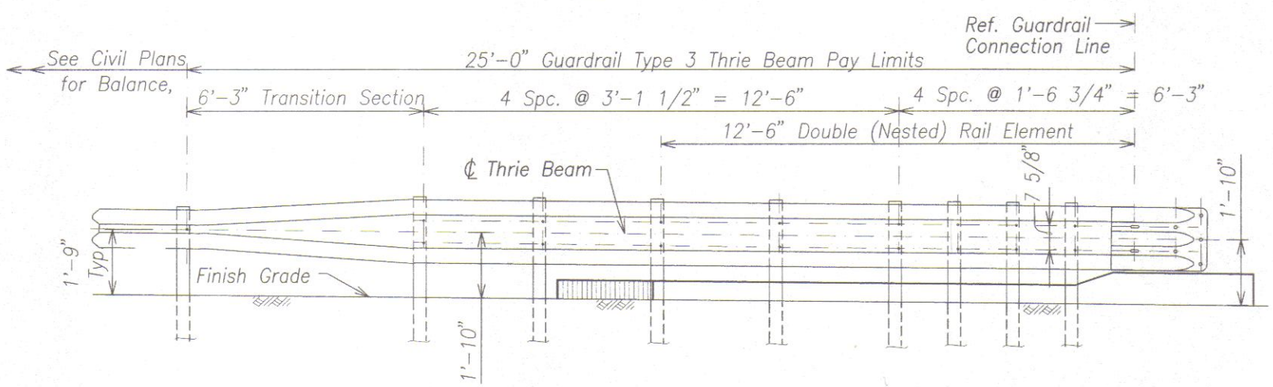

TYPICAL TYPE 3 THRIE BEAM METAL GUARDRAIL FOR END POST ELEVATION E SB12.3 SB12.3
Scale: 1/2" = 1'-0"

DAVID K. FUJIWARA LICENSED PROFESSIONAL ENGINEER NO. 8104-S HAWAII, U.S.A.

THIS WORK WAS PREPARED BY ME OR UNDER MY SUPERVISION.

KSF, INC. APRIL 30, 2012 LIC. EXP. DATE

STATE OF HAWAII
DEPARTMENT OF TRANSPORTATION
HIGHWAYS DIVISION

GUARD RAIL AND END POST – PLAN ELEVATION, SECTIONS AND DETAILS
HONOAPIILANI HIGHWAY REALIGNMENT, PHASE 1A
Future Keawe St Extension to Lahainaluna Rd, Part B
Fed. Aid Proj. No. NH-030-1(35)R

Scale: As Noted Date: June, 2010

SHEET No. SB12.3 OF 4 SHEETS

ORIGINAL PLAN	SURVEY PLOTTED BY	DATE
	DRAWN BY	
NOTE BOOK	TRACED BY	
	DESIGNED BY	
	QUANTITIES BY	
No.	CHECKED BY	

DRAWING NAME: Z:\DO ONGOING\40019.0-HONOAPIILANI LAHAINA BYPASS-KAHOMA WO\06-15-10 COMBINE LAHAINA FINAL DESIGN\HH-SB1203.DWG PLOT TIME: 06-14-10, 8:24 PM

FED. ROAD DIST. NO.	STATE	FED. AID PROJ. NO.	FISCAL YEAR	SHEET NO.	TOTAL SHEETS
HAWAII	HAW.	NH-030-1(35)R	2009	359	383

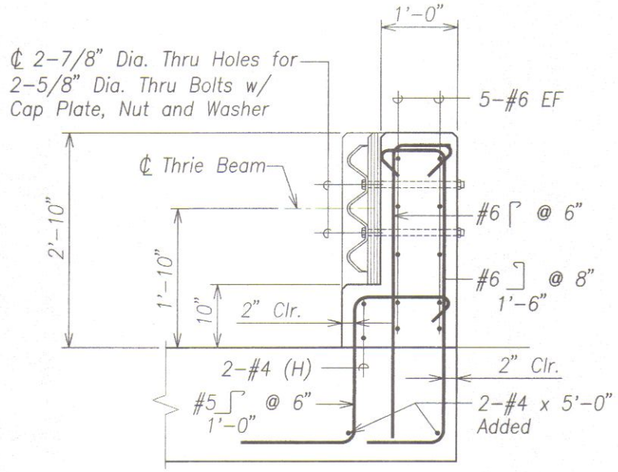

SECTION 1 (SB12.3 | SB12.4)
Scale: 1" = 1'-0"

NOTE:
See Sheet SB13.1 for Approach Slab reinforcing.

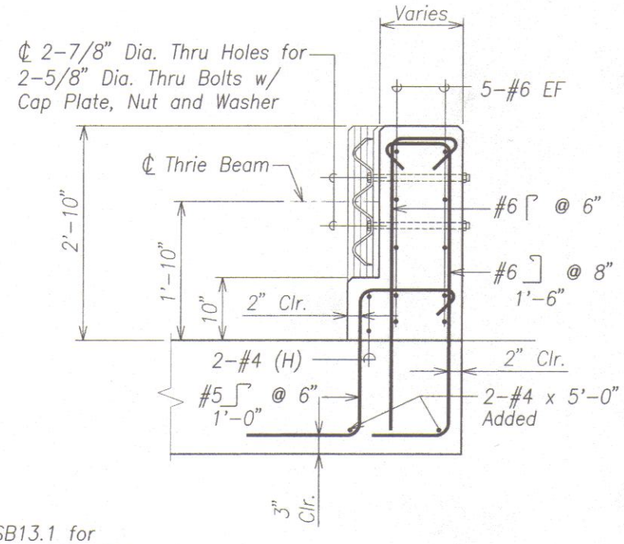

SECTION 2 (SB12.3 | SB12.4)
Scale: 1" = 1'-0"

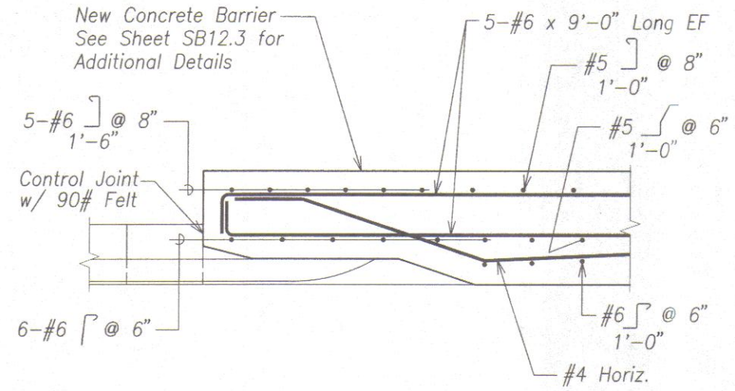

PLAN A (SB12.3 | SB12.4)
Scale: 1" = 1'-0"

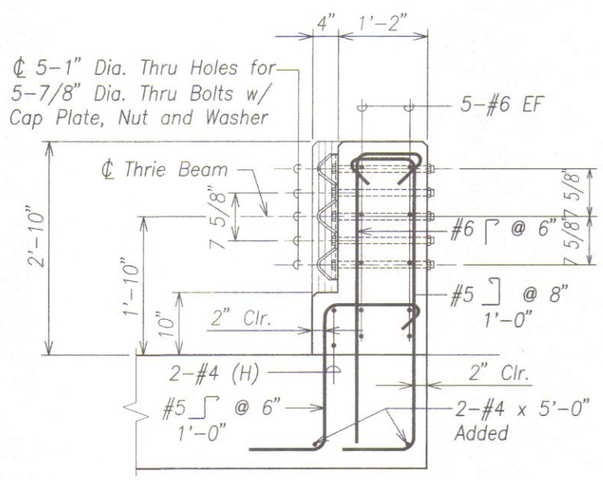

SECTION 3 (SB12.3 | SB12.4)
Scale: 1" = 1'-0"

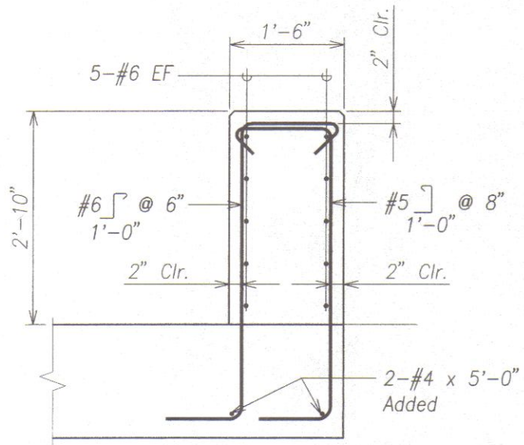

SECTION 4 (SB12.3 | SB12.4)
Scale: 1" = 1'-0"

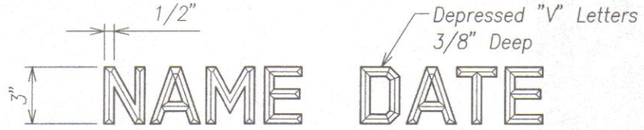

Name of Bridge Date of Year Built

NOTES:
1. Exact details and spacing of letter and figures and location shall be as directed by the Engineer. Gothic letters and figures approximating the dimensions shown will be acceptable if approved by the Engineer.
2. Name & date shall be place on the trailing (exit) end post on each side of bridge.
3. Unless otherwise directed by the Engineer, The name of the bridge shall be "KAHOMA STREAM BRIDGE". The date shall be 2011.

TYPICAL DETAIL OF LETTERS AND FIGURES

BRIDGE IDENTIFICATION DETAIL 1 (SB12.4 | SB12.4)
Scale: 3" = 1'-0"

DAVID K. FUJIWARA LICENSED PROFESSIONAL ENGINEER NO. 8104-S HAWAII, U.S.A.

THIS WORK WAS PREPARED BY ME OR UNDER MY SUPERVISION.
KSF, INC. APRIL 30, 2012 LIC. EXP. DATE

STATE OF HAWAII
DEPARTMENT OF TRANSPORTATION
HIGHWAYS DIVISION

END POST SECTIONS

HONOAPIILANI HIGHWAY REALIGNMENT, PHASE 1A
Future Keawe St Extension to Lahainaluna Rd, Part B
Fed. Aid Proj. No. NH-030-1(35)R

Scale: As Noted Date: June, 2010

SHEET No. SB12.4 OF 4 SHEETS

ORIGINAL PLAN | SURVEY PLOTTED BY | DRAWN BY | TRACED BY | DESIGNED BY | QUANTITIES BY | CHECKED BY | DATE | NOTE BOOK No.

DRAWING NAME: Z:\00 ONGOING\40019.0-HONOAPIILANI LAHAINA BYPASS-KAHOMA WO\06-15-10 COMBINE LAHAINA FINAL DESIGN\HH-SB1204.DWG PLOT TIME: 06-14-10, 8:24 PM

FED. ROAD DIST. NO.	STATE	FED. AID PROJ. NO.	FISCAL YEAR	SHEET NO.	TOTAL SHEETS
HAWAII	HAW.	NH-030-1(35)R	2009	360	383

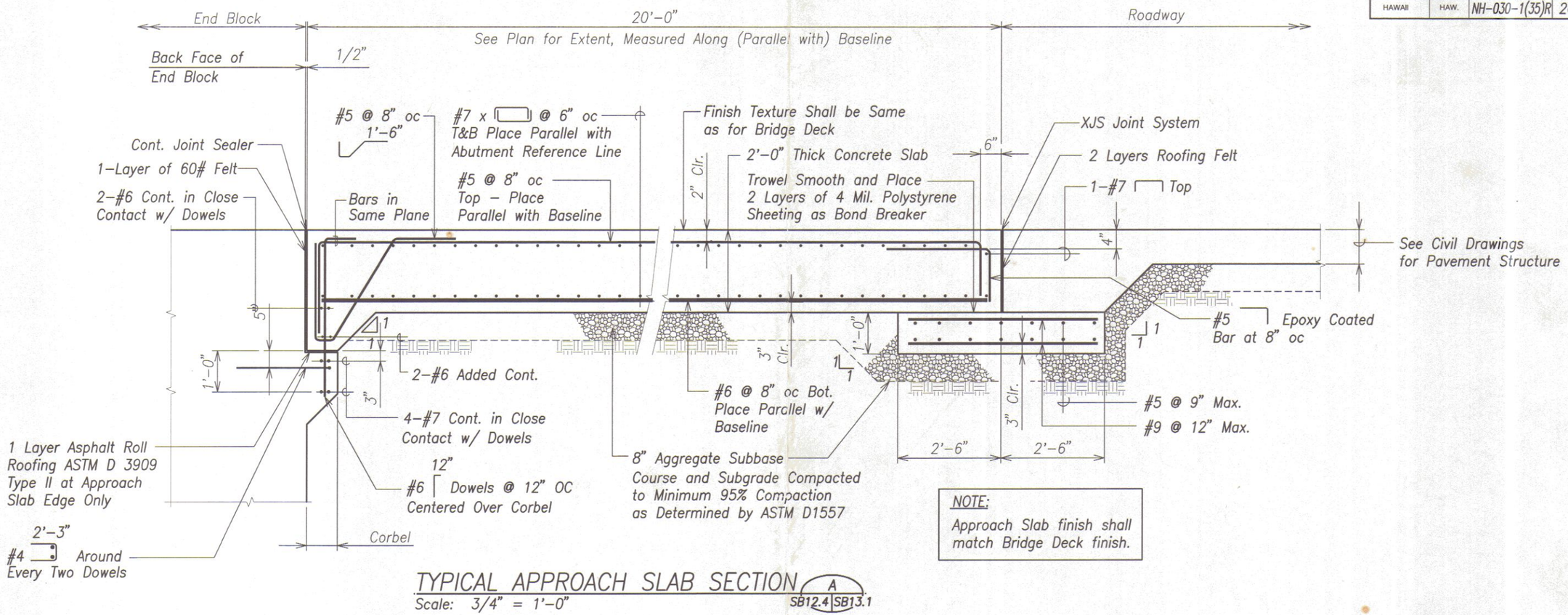

NOTE:
Approach Slab finish shall match Bridge Deck finish.

TYPICAL APPROACH SLAB SECTION (A)

Scale: 3/4" = 1'-0"

SB12.4 SB13.1

PLOT TIME: 11-07-12, 10:40 AM)

DRAWING NAME: Z:\00 ONGOING\40019.0-HONOAPIILANI LAHAINA BYPASS-KAHOMA - HDOC\11-06-12 REV APRCH SLAB\HH-SB1301.DWG

ORIGINAL PLAN	SURVEY PLOTTED BY	DATE
	DRAWN BY	"
	TRACED BY	"
NOTE BOOK	DESIGNED BY	"
	QUANTITIES BY	"
No.	CHECKED BY	"

DAVID K. FUJIWARA LICENSED PROFESSIONAL ENGINEER NO. 8104-S HAWAII, U.S.A.

THIS WORK WAS PREPARED BY ME OR UNDER MY SUPERVISION.

KSF, INC. — APRIL 30, 2012 LIC. EXP. DATE

11-07-2012 - REV.

STATE OF HAWAII
DEPARTMENT OF TRANSPORTATION
HIGHWAYS DIVISION

APPROACH SLAB

HONOAPIILANI HIGHWAY REALIGNMENT, PHASE 1A
Future Keawe St Extension to Lahainaluna Rd, Part B
Fed. Aid Proj. No. NH-030-1(35)R

Scale: As Noted — Date: August, 2010

SHEET No. SB13.1 OF 1 SHEETS

FINAL DESIGN 360

FED. ROAD DIST. NO.	STATE	FED. AID PROJ. NO.	FISCAL YEAR	SHEET NO.	TOTAL SHEETS
HAWAII	HAW.	NH-030-1(35)R	2009	360	383

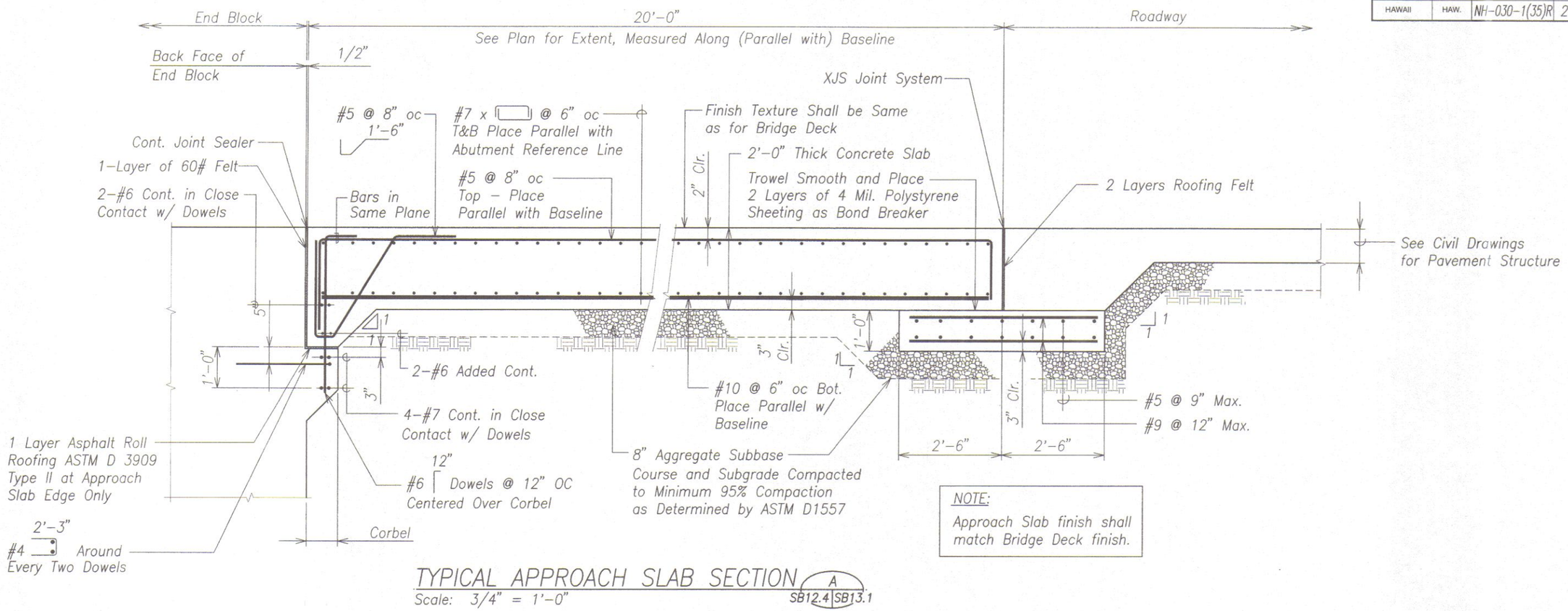

NOTE:
Approach Slab finish shall match Bridge Deck finish.

TYPICAL APPROACH SLAB SECTION (A)

Scale: 3/4" = 1'-0"

SB12.4 | SB13.1

DRAWING NAME: Z:\DD ONGOING\40019.0-HONOAPIILANI LAHAINA BYPASS-KAHOMA WO\06-15-10 COMBINE LAHAINA FINAL DESIGN\HH-SB1301.DWG PLOT TIME: 06-14-10, 8:25 PM)

ORIGINAL PLAN	SURVEY PLOTTED BY	DATE
	DRAWN BY	"
NOTE BOOK	TRACED BY	"
	DESIGNED BY	"
	QUANTITIES BY	"
No.	CHECKED BY	"

DAVID K. FUJIWARA LICENSED PROFESSIONAL ENGINEER NO. 8104-S HAWAII, U.S.A.

THIS WORK WAS PREPARED BY ME OR UNDER MY SUPERVISION.

KSF, INC. — APRIL 30, 2012 LIC. EXP. DATE

STATE OF HAWAII
DEPARTMENT OF TRANSPORTATION
HIGHWAYS DIVISION

APPROACH SLAB

HONOAPIILANI HIGHWAY REALIGNMENT, PHASE 1A
Future Keawe St Extension to Lahainaluna Rd, Part B
Fed. Aid Proj. No. NH-030-1(35)R

Scale: As Noted — Date: June, 2010

SHEET No. SB13.1 OF 1 SHEETS

FINAL DESIGN ~~360~~ Dw.

FED. ROAD DIST. NO.	STATE	FED. AID PROJ. NO.	FISCAL YEAR	SHEET NO.	TOTAL SHEETS
HAWAII	HAW.	NH-030-1(35)R	2009	361	383

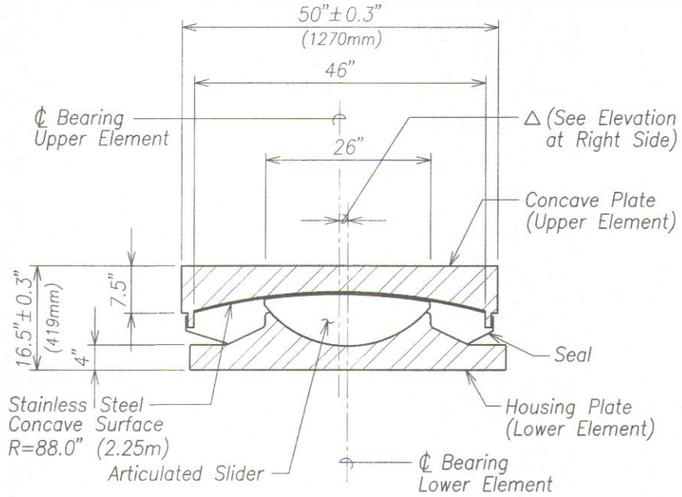

SECTION
Scale: 1" = 1'-0"

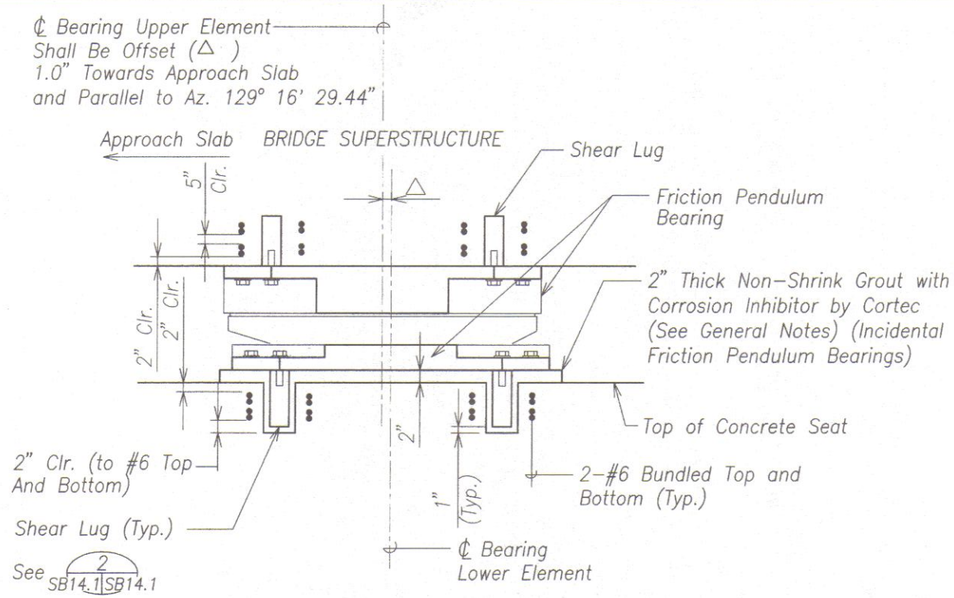

ELEVATION
Scale: 1" = 1'-0"

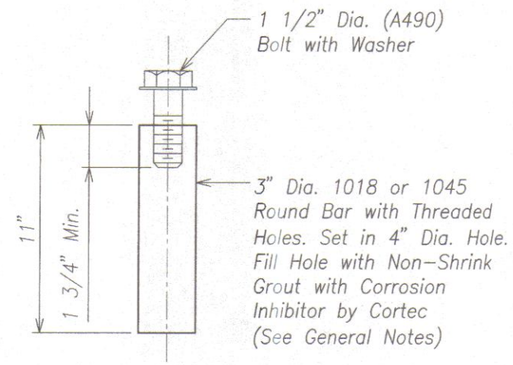

SHEAR LUG DETAIL 2 SB14.1 SB14.1
Scale: 3" = 1'-0"

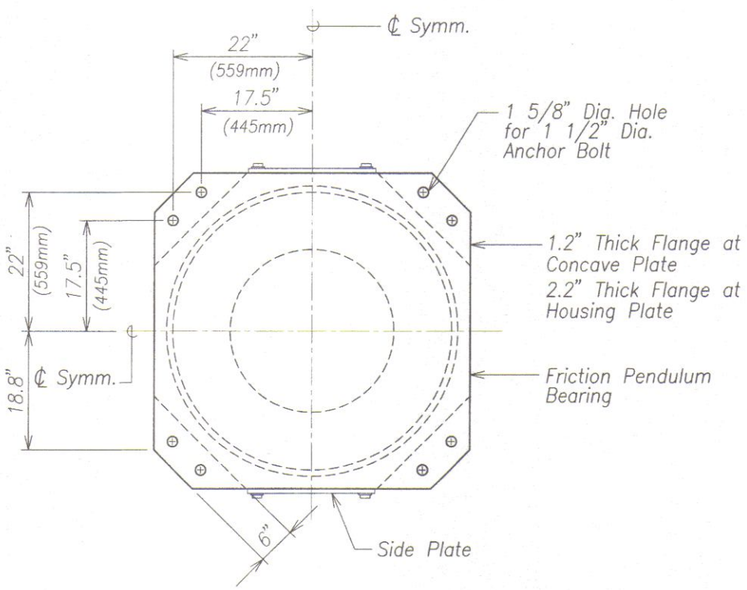

PLAN
Scale: 1" = 1'-0"

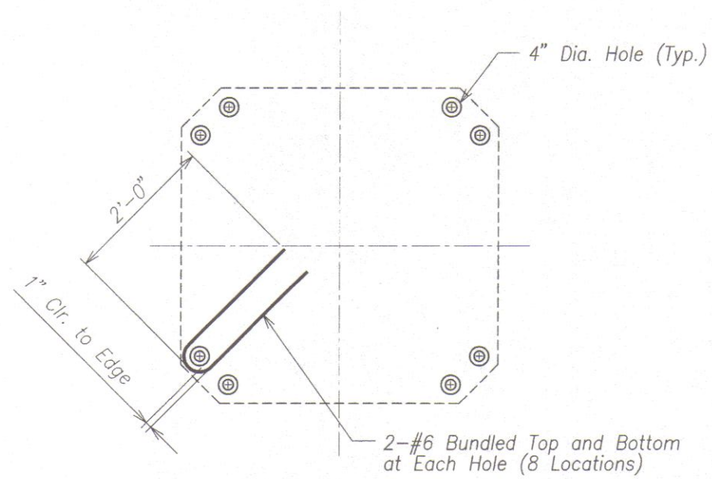

SECTION – PLAN
Scale: 1" = 1'-0"

Period = 3.0 (r = 88.0" (2.25m))
Displacement Capacity: 10 in. (254mm)
Service Vertical Load Capacity [d+(l+i)] = 5,000 kips
Ultimate Vertical Load Capacity [d+(l+i)+e] = 10,000 kips
Static Friction = .04
Kinematic Friction = .05

FRICTION PENDULUM BEARING AT PIER 1 SB14.1 SB14.1
Scale: 1" = 1'-0"

DAVID K. FUJIWARA LICENSED PROFESSIONAL ENGINEER NO. 8104-S HAWAII, U.S.A.

THIS WORK WAS PREPARED BY ME OR UNDER MY SUPERVISION.

KSF, INC. APRIL 30, 2012 LIC. EXP. DATE

STATE OF HAWAII
DEPARTMENT OF TRANSPORTATION
HIGHWAYS DIVISION

FRICTION PENDULUM BEARING DETAILS

HONOAPIILANI HIGHWAY REALIGNMENT, PHASE 1A
Future Keawe St Extension to Lahainaluna Rd, Part B
Fed. Aid Proj. No. NH-030-1(35)R

Scale: As Noted Date: June, 2010

SHEET No. SB14.1 OF 1 SHEETS

ORIGINAL PLAN | SURVEY PLOTTED BY | DRAWN BY | TRACED BY | DESIGNED BY | QUANTITIES BY | CHECKED BY | DATE | NOTE BOOK | No.

DRAWING NAME: Z:\00 ONGOING\40019.0-HONOAPIILANI LAHAINA BYPASS-KAHOMA WO\06-15-10 COMBINE LAHAINA FINAL DESIGN\HH-SB1401.DWG PLOT TIME: 06-14-10, 8:25 PM)

FED. ROAD DIST. NO.	STATE	FED. AID PROJ. NO.	FISCAL YEAR	SHEET NO.	TOTAL SHEETS
HAWAII	HAW.	NH-030-1(35)R	2009	362	383

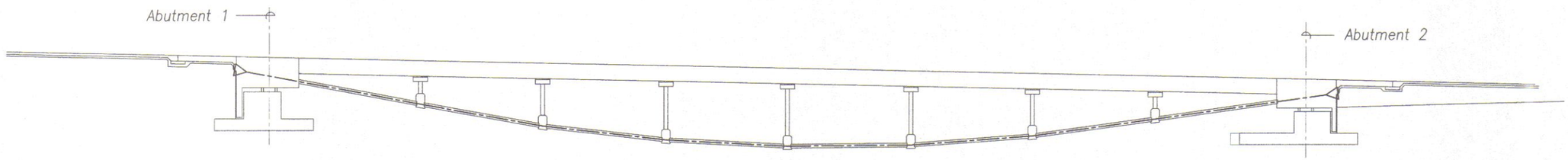

ELEVATION (A SB15.1 | SB15.1)
Scale: 1" = 20'-0"

POST TENSIONING NOTES:

1. Post-Tensioning Ducts shall be 4 3/8" O.D. (for PATP line numbers 4-10) & 4 3/4" O.D. (for PATP line numbers 1-3) Spiro-Type Semi-Rigid galvanized.

2. After post-tensioning, Tendons shall be pressure grouted w/ Masterflow 1205 Cable Grout or Sika Grout 300 PT or equal. Ducts shall have grouting vents at anchorage and at each high point along the Tendon profile.

3. Duct shall be secured to prevent misalignment during concreting.

4. A minimum compressive strength of 8000 PSI shall be obtained in the PATP before the application of post-tensioning.

5. Post-Tensioned Strands shall be 7 wire 0.6 dia. Low Relaxation Steel Strands (Area = 0.217 in.) with an ultimate tensile strength of 270 ksi. For properties, see "Special Provisions".

6. The post-tensioning design assumptions are as follows:

Curve Friction Coefficient	0.18
Wobble Friction Coefficient	0.0002/ft.
Anchor Set	3/8"

7. The design jacking force at end of each Tendon:
   1186k for PATP Line numbers 1 through 3
   967k for PATP Line numbers 4 through 7
   835k for PATP Line numbers 8 through 10

   The maximum stress in the Strand before anchor set in is 75% of the guaranteed ultimate strength. Each Tendon will be stressed in two stages at each end of bridge. Stage 1 = 50% of Pjack Stage 2 = 100%. Therefore, each Tendon will be stressed a total of four times.

8. Post-Tensioning Anchors shall be AVAR ACS 27 x 6 or equal for PATP Line numbers 1 through 3.
   Post-Tensioning Anchors shall be AVAR ACS 22 x 6 or equal for PATP Line numbers 4 through 10.

9. Jacking symbols are as follows:
   ⊳⊸ Jacking end

10. Post-tensioning shall comply with AASHTO LRFD Bridge Construction Specifications including the latest interim revisions.

DAVID K. FUJIWARA LICENSED PROFESSIONAL ENGINEER NO. 8104-S HAWAII, U.S.A.

THIS WORK WAS PREPARED BY ME OR UNDER MY SUPERVISION.

KSF, INC. — APRIL 30, 2012 LIC. EXP. DATE

STATE OF HAWAII
DEPARTMENT OF TRANSPORTATION
HIGHWAYS DIVISION

PRECAST ARCH TIE PLANK
POST-TENSIONING

HONOAPIILANI HIGHWAY REALIGNMENT, PHASE 1A
Future Keawe St Extension to Lahainaluna Rd, Part B
Fed. Aid Proj. No. NH-030-1(35)R

Scale: As Noted — Date: June, 2010

SHEET No. SB15.1 OF 1 SHEETS

ORIGINAL PLAN | NOTE BOOK No. | SURVEY PLOTTED BY | DRAWN BY | TRACED BY | DESIGNED BY | QUANTITIES BY | CHECKED BY | DATE

DRAWING NAME: Z:\00 ONGOING\40019.0-HONOAPIILANI LAHAINA BYPASS-KAHOMA WO\06-15-10 COMBINE LAHAINA FINAL DESIGN\HH-SB1501.DWG PLOT TIME: 06-14-10, 8:26 PM)

FED. ROAD DIST. NO.	STATE	FED. AID PROJ. NO.	FISCAL YEAR	SHEET NO.	TOTAL SHEETS
HAWAII	HAW.	NH-030-1(35)R	2009	363	383

CONSTRUCTION SEQUENCE:

STAGE

1 Site cast PATP's (Precast Arch Tie Plank), PG's (Precast Girders), PDP's (Precast Deck Planks).

2 Probe and grout at Abutments.

3 Install Falsework at Bents.

NOTE: Stage 4 may be done concurrently with Stages 5, 6, 7, 8, and 9.

4 Construct Abutment except Backwall.

5 Erect PATP's.

6 Construct Cast-in-Place Stiffener Beam between ends of PATP's.

7 Construct CIP Bent at least seven (7) days after the concrete pour in Stage 6 or until the concrete in Stage 6 has attained a compressive strength of 6000 psi, whichever occurs later.

8 Erect PG's at least seven (7) days after the concrete pour in Stage 7 or until the concrete in Stage 7 has attained a compressive strength of 6000 psi, whichever occurs later.

9 Install reinforcing above bottom slab of Precast Girder.

10 Construct Beams over Bent Caps.

11 Pour topping above bottom slab of Precast Girder.

12 Cast In-Span Diaphragms.

13 Install Bearings at least seven (7) days after the concrete pour in Stage 4 or until the concrete in Stage 4 has attained a compressive strength of 6000 psi, whichever occurs later.

14 Construct End Blocks.

15 Post-tension vertical High Strength Threadbars in End Blocks after concrete has attained a compressive strength of 6,000 psi.

16 Post-tension transverse Tendons in End Blocks.

17 Erect PDP's at least seven (7) days after the concrete pour in Stage 14.

18 Pour Deck topping over PDP's and End Blocks.

19 Post-tension longitudinal Tendons at least 21 days after Deck topping pour or after Deck topping concrete has attained a compressive strength of 8,000 psi whichever occurs later.

20 Pour Anchorage blockouts covering longitudinal Tendons.

STAGE

21 Remove Falsework at least four (4) days after grouting the longitudinal Tendons or until the grout has attained a compressive strength of 7000 psi, whichever occurs later, and the concrete in Stage 20 has attained a compressive strength of 6000 psi.

22 Construct Backwall of Abutment, End Posts and Railings.

23 Backfill Abutments.

24 Construct Approach Slab and install Expansion Joints.

25 Bridge may be opened for traffic after the following compressive strengths have been attained or at least 7 days after the newest pour, whichever occurs later:

Railings and Concrete Barriers	= 4,000 psi
Approach Slab	= 4,000 psi
Concrete in Expansion Joint Blockouts	= 8,000 psi

DAVID K. FUJIWARA LICENSED PROFESSIONAL ENGINEER NO. 8104-S HAWAII, U.S.A.

THIS WORK WAS PREPARED BY ME OR UNDER MY SUPERVISION.

KSF, INC. APRIL 30, 2012 LIC. EXP. DATE

STATE OF HAWAII
DEPARTMENT OF TRANSPORTATION
HIGHWAYS DIVISION

CONSTRUCTION SEQUENCE

HONOAPIILANI HIGHWAY REALIGNMENT, PHASE 1A
Future Keawe St Extension to Lahainaluna Rd, Part B
Fed. Aid Proj. No. NH-030-1(35)R

Scale: As Noted Date: June, 2010

SHEET No. SB16.1 OF 1 SHEETS

ORIGINAL PLAN	SURVEY PLOTTED BY	DATE
	DRAWN BY	
	TRACED BY	
NOTE BOOK	DESIGNED BY	
	QUANTITIES BY	
No.	CHECKED BY	

DRAWING NAME: Z:\00 ONGOING\40019.0-HONOAPIILANI LAHAINA BYPASS-KAHOMA WO\06-15-10 COMBINE LAHAINA FINAL DESIGN\HH-SB1601.DWG PLOT TIME: 06-14-10, 8:26 PM)

FED. ROAD DIST. NO.	STATE	FED. AID PROJ. NO.	FISCAL YEAR	SHEET NO.	TOTAL SHEETS
HAWAII	HAW.	NH-030-1(35)R	2009	00	379

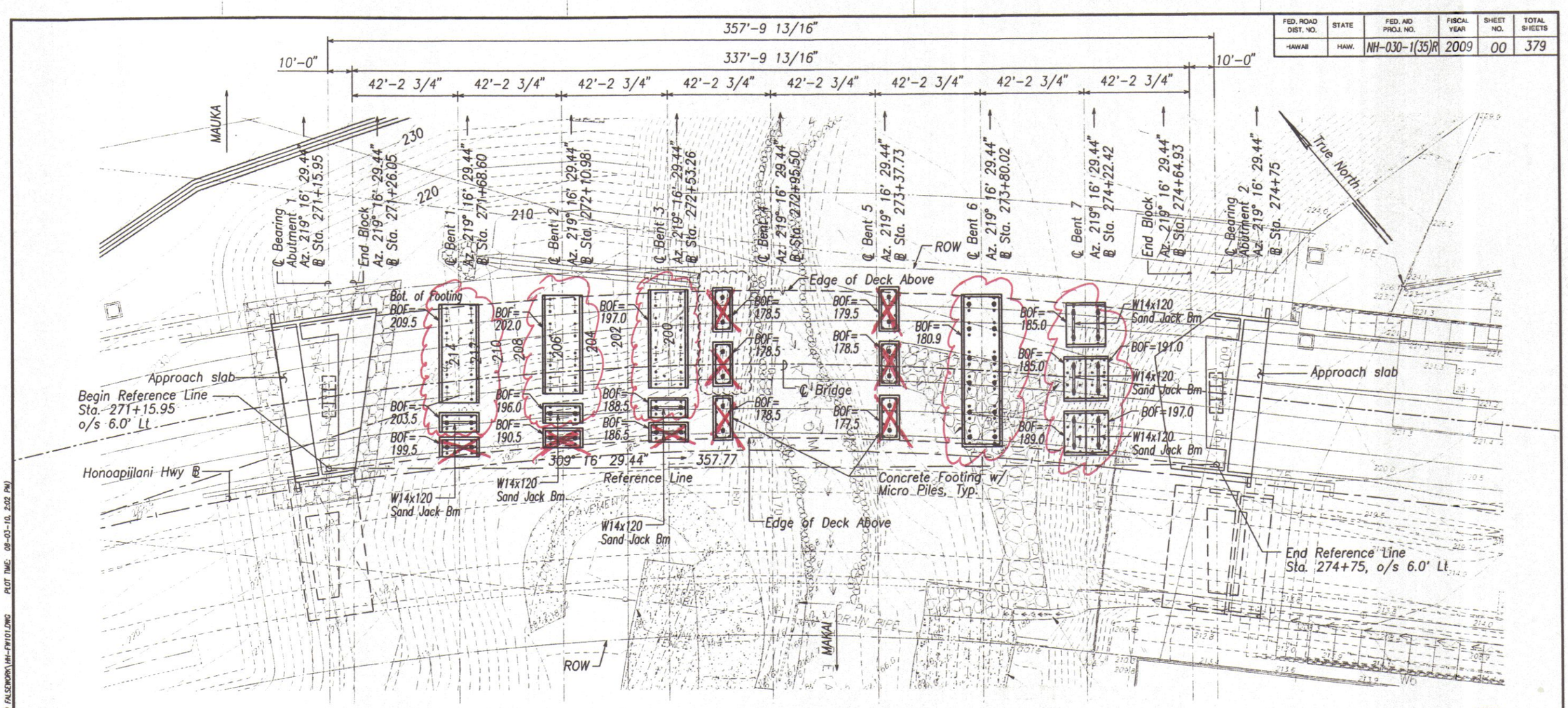

FALSEWORK FOUNDATION PLAN

Scale: 1" = 20'-0"

A FW1.1 FW1.1

Legend:

- Micro Pile By HDCC
- 12" Dia. X-STR Pile Columns

X = FOOTING TO REMOVE

= FOOTING TO REMAIN
* STEM WALL REMOVED
Backfilled with Native Material

FOR HDCC

08-03-2010

DAVID K. FUJIWARA LICENSED PROFESSIONAL ENGINEER NO. 8104-S HAWAII, U.S.A.

THIS WORK WAS PREPARED BY ME OR UNDER MY SUPERVISION.

KSF, INC. — APRIL 30, 2010 LIC. EXP. DATE

STATE OF HAWAII
DEPARTMENT OF TRANSPORTATION
HIGHWAYS DIVISION

FALSEWORK FOUNDATION PLAN

HONOAPIILANI HIGHWAY REALIGNMENT, PHASE 1A
Future Keawe St Extension to Lahainaluna Rd, Part B
Fed. Aid Proj. No. NH-030-1(35)R

Scale: As Noted Date: March, 2010

SHEET No. FW1.1 OF 00 SHEETS

ORIGINAL PLAN | SURVEY PLOTTED BY | DRAWN BY | TRACED BY | DESIGNED BY | QUANTITIES BY | CHECKED BY | DATE | NOTE BOOK No.

DRAWING NAME: Z:\00 ONGOING\40019.0-HONOAPIILANI LAHAINA BYPASS-KAHUMA WD\08-03-10 FALSEWORK\NH-FW101.DWG PLOT TIME: 08-03-10, 2:02 PM)

FED. ROAD DIST. NO.	STATE	FED. AID PROJ. NO.	FISCAL YEAR	SHEET NO.	TOTAL SHEETS
HAWAII	HAW.	NH-030-1(35)R	2009	00	379

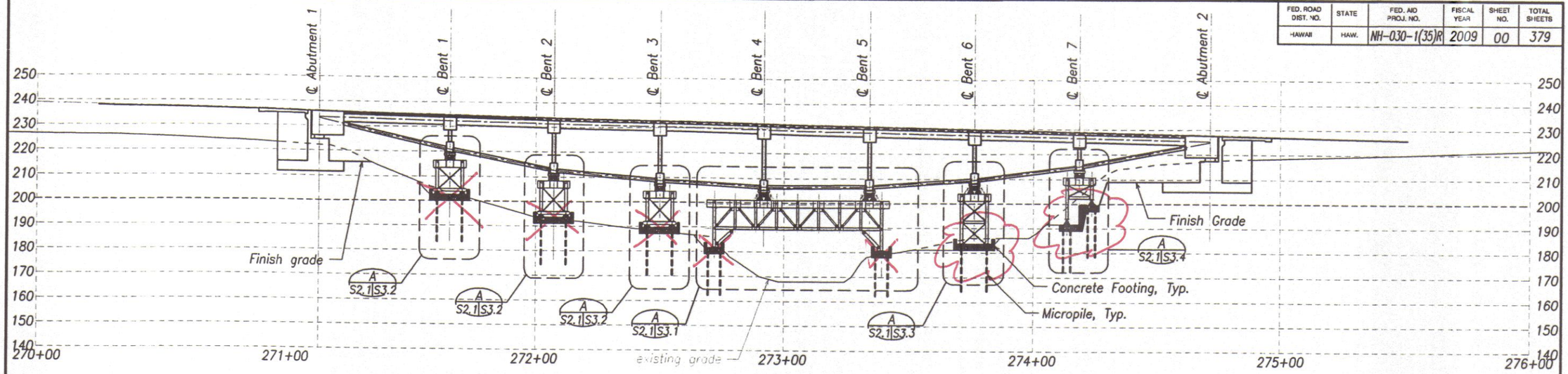

MAKAI SECTION – ALONG MAUKA BRIDGE

Scale: 1" = 20'

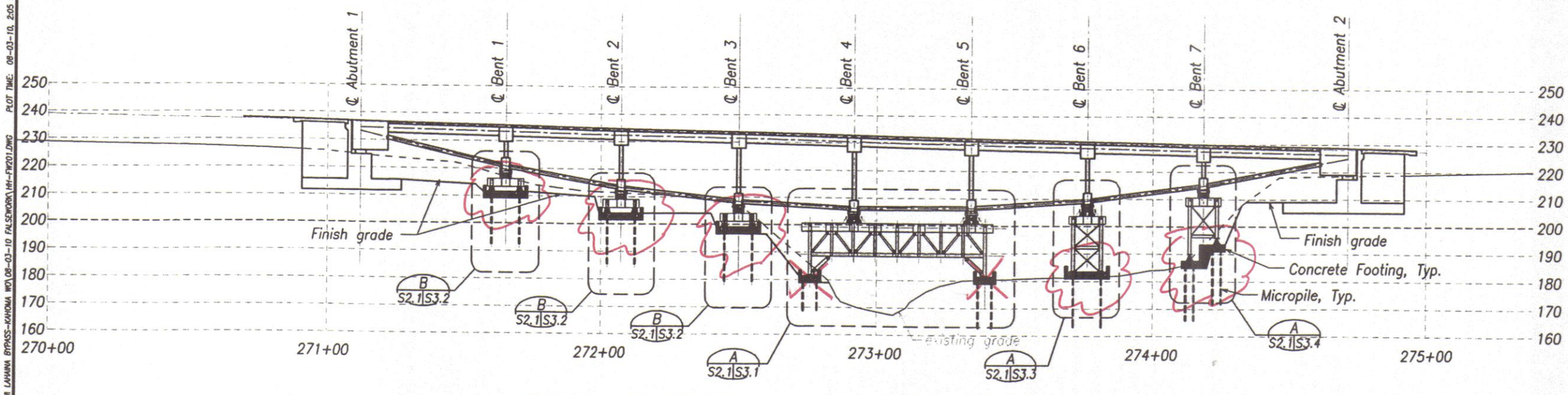

CENTERLINE SECTION – ALONG MAUKA BRIDGE

Scale: 1" = 20'

X = FOOTING TO REMOVE

= FOOTING TO REMAIN

FOR HDCC

08-03-2010

DAVID K. FUJIMARA LICENSED PROFESSIONAL ENGINEER NO. 8104-S HAWAII, U.S.A.

THIS WORK WAS PREPARED BY ME OR UNDER MY SUPERVISION.

KSF, INC. — APRIL 30, 2010 LIC. EXP. DATE

STATE OF HAWAII
DEPARTMENT OF TRANSPORTATION
HIGHWAYS DIVISION

FALSEWORK SECTIONS

HONOAPIILANI HIGHWAY REALIGNMENT, PHASE 1A
Future Keawe St Extension to Lahainaluna Rd, Part B
Fed. Aid Proj. No. NH-030-1(35)R

Scale: As Noted — Date: March, 2010

SHEET No. FW2.1 OF 00 SHEETS

OFFICIAL PLAN — NOTE BOOK No. — SURVEY PLOTTED BY — DRAWN BY — TRACED BY — DESIGNED BY — QUANTITIES BY — CHECKED BY — DATE

DRAWING NAME: Z:\00 ONGOING\40019.0-HONOAPIILANI LAHAINA BYPASS-KAHOMA WY\08-03-10 FALSEWORK\NH-1FW201.DWG PLOT TIME: 08-03-10, 2:05 PM

FED. ROAD DIST. NO.	STATE	FED. AID PROJ. NO.	FISCAL YEAR	SHEET NO.	TOTAL SHEETS
HAWAII	HAW.	NH-030-1(35)R	2009	00	379

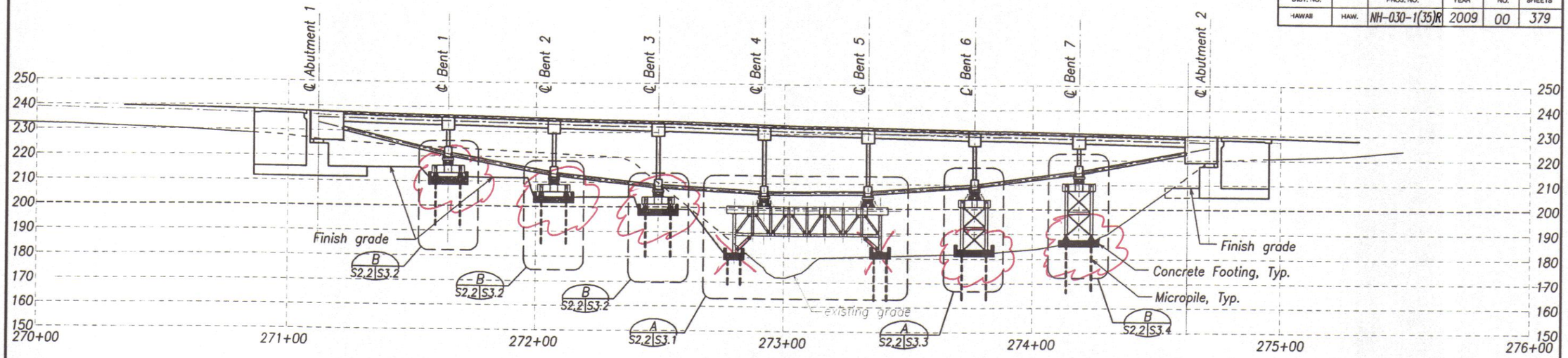

MAUKA SECTION – ALONG MAUKA BRIDGE

Scale: 1" = 20'

X = FOOTING TO REMOVE

= FOOTING TO REMAIN.

FOR HDCC

08-03-2010

DAVID K. FUJIWARA LICENSED PROFESSIONAL ENGINEER NO. 8104-S HAWAII, U.S.A.

THIS WORK WAS PREPARED BY ME OR UNDER MY SUPERVISION.

KSF, INC. — APRIL 30, 2010 LIC. EXP. DATE

STATE OF HAWAII
DEPARTMENT OF TRANSPORTATION
HIGHWAYS DIVISION

FALSEWORK SECTION

HONOAPIILANI HIGHWAY REALIGNMENT, PHASE 1A
Future Keawe St Extension to Lahainaluna Rd, Part B
Fed. Aid Proj. No. NH-030-1(35)R

Scale: As Noted Date: March, 2010

SHEET No. FW2.2 OF 00 SHEETS

00

ORIGINAL PLAN — SURVEY PLOTTED BY ___ DATE ___; SURVEY BY ___; TRACED BY ___; DESIGNED BY ___; QUANTITIES BY ___; CHECKED BY ___; NOTE BOOK No. ___

DRAWING NAME: Z:\00 ONGOING\49018.0-HONOAPIILANI LAHAINA BYPASS-KAHOMA WO\08-03-10 FALSEWORK\HH-FW201.DWG PLOT TIME: 08-03-10, 2:05 PM