DIST. NO.	STATE	FED. AID PROJ. NO.	FISCAL YEAR	SHEET NO.	TOTAL SHEETS
MAUI	HAW.	BR-030-1(37)	2024	39	42

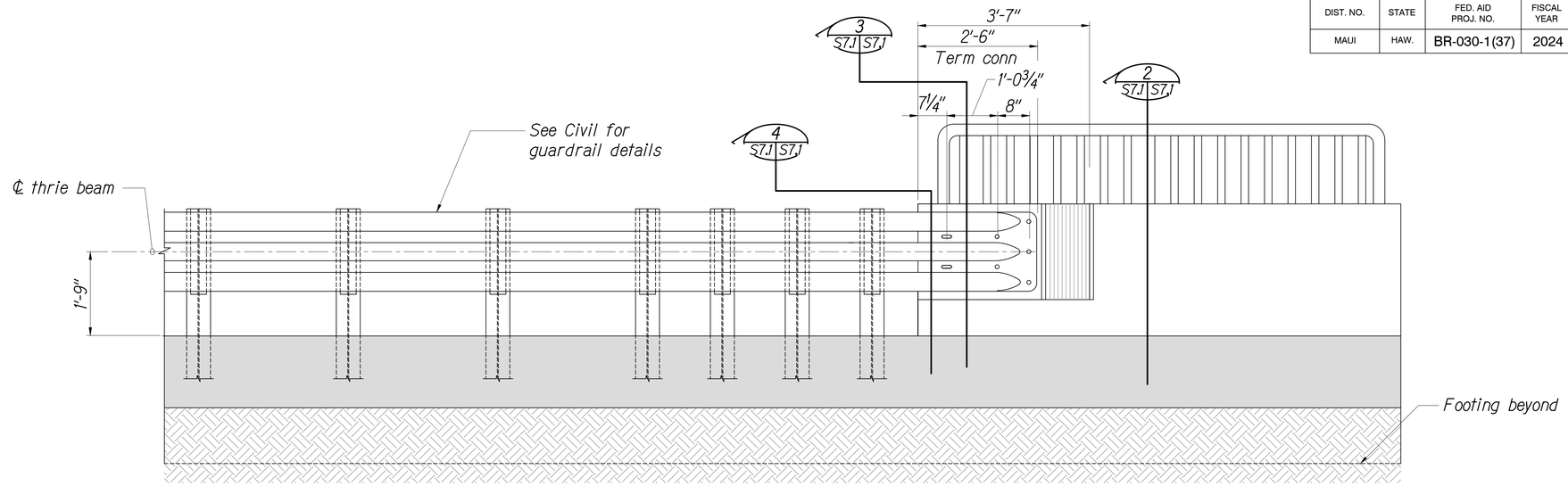

GUARDRAIL INTERIOR ELEVATION (1 / S7.1 S7.1)

Scale: 3/4" = 1'-0"

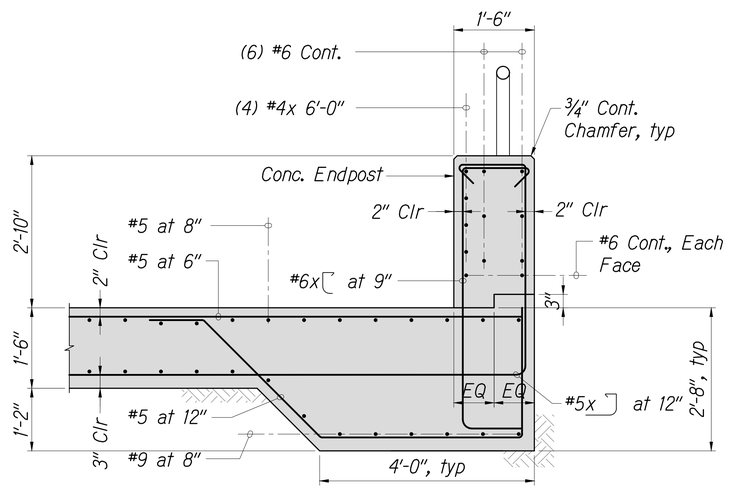

SECTION (2 / S7.1 S7.1)

Scale: 3/4" = 1'-0"

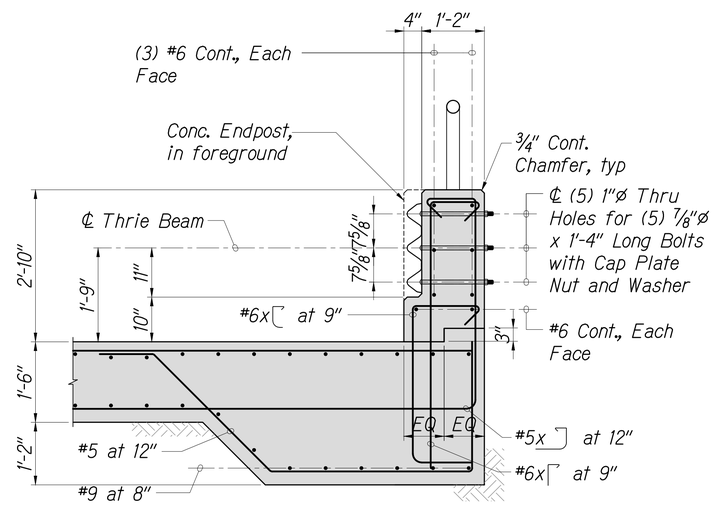

SECTION (3 / S7.1 S7.1)

Scale: 3/4" = 1'-0"

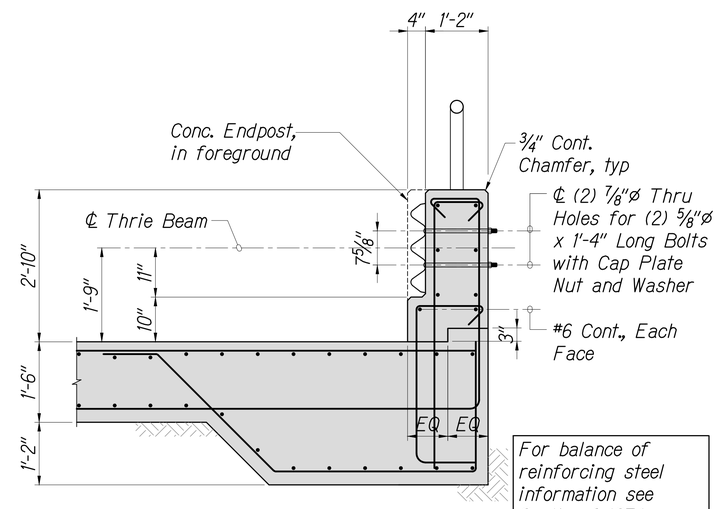

For balance of reinforcing steel information see Section 2/S7.1

SECTION (4 / S7.1 S7.1)

Scale: 3/4" = 1'-0"

0' 1' 2' 3' 4'
3/4" = 1'-0"

ORIGINAL PLAN	SURVEY PLOTTED BY	DATE
	DRAWN BY	
	TRACED BY	
NOTE BOOK	DESIGNED BY	
	QUANTITIES BY	
No.	CHECKED BY	

KEN KAZUO HAYASHIDA
LICENSED PROFESSIONAL ENGINEER
No. 6818-S
HAWAII, U.S.A.

THIS WORK WAS PREPARED BY ME OR UNDER MY SUPERVISION.

APRIL 30, 2026
LIC. EXP. DATE

STATE OF HAWAII
DEPARTMENT OF TRANSPORTATION
HIGHWAYS DIVISION

Bridge Railing and End Post Details

Honoapi'ilani Highway
Rehabilitation of Honolua Bridge
F.A.P. No. BR-030-1(37)

Scale: As Shown Date: August 2024

SHEET No. S7.1 OF 42 SHEETS