FED. ROAD DIST. NO.	STATE	PROJ. NO.	FISCAL YEAR	SHEET NO.	TOTAL SHEETS
HAWAII	HAW.	STP-030-1(39)	2008	106	194

INDEX TO DRAWINGS

SHEET	DESCRIPTION	
S-1	DRAWING INDEX & ESTIMATED QUANTITIES	106
S-2	GENERAL NOTES	107
S-3	~~SPECIAL DMH/DRYWELL PLAN/SECTION & DETAILS~~ NOT USED	
S-4	GRATE DRAINAGE INLET PLAN/SECTION & DETAILS	108
S-5	TYPE "B1" & "C1" CATCH BASIN/DRYWELL PLAN/SECTION & DETAILS	109
S-6	CONCRETE PIPE CONNECTION COLLAR DETAIL CONCRETE PIPE JACKET DETAIL	110
S-7	DRAINLINE "DL-A" PLAN & PROFILE	111
S-8	DRAINLINE "DL-B" PLAN & PROFILE AT BASELINE STATION 95+36.30	112
S-9	DRAINLINE "DL-C" & "DL-D" AT BASELINE STATION 99+60.03 & 99+63.26	113
S-10	TYPE 1 RETAINING WALL DETAILS	114
S-11	TYPE 2 RETAINING WALL DETAILS	115
S-12	TYPE 3 RETAINING WALL DETAILS	116
S-13	RETAINING WALL DETAILS	117
S-14	NOISE BARRIER JOINT DETAILS	118
S-15	CONC WALL JOINT DETAILS	119
S-16	RETAINING WALL FOUNDATION DETAILS - 1	120
S-17	RETAINING WALL FOUNDATION DETAILS - 2	121
S-18	RETAINING WALL FOUNDATION DETAILS - 3	122
S-19	RETAINING WALL FOUNDATION DETAILS - 4	123
S-20	TRANSITION DETAIL METAL GUARDRAIL/CONCRETE ENDWALL	124
S-21	CRM DRAIN INLET STRUCTURE	125
S-22	TRAFFIC SIGNAL POLE FOUNDATION DETAIL - 1	126
S-23	TRAFFIC SIGNAL POLE FOUNDATION DETAIL - 2	127
S-24	TRAFFIC SIGNAL POLE FOUNDATION DETAIL - 3	128
S-25	PARTIAL MAKAI RETAINING WALL ELEVATION - 1	129
S-26	PARTIAL MAKAI RETAINING WALL ELEVATION - 2	130
S-27	PARTIAL MAKAI RETAINING WALL ELEVATION - 3	131
S-28	PARTIAL MAKAI RETAINING WALL ELEVATION - 4	132
S-29	PARTIAL MAKAI RETAINING WALL ELEVATION - 5	133
S-30	PARTIAL MAKAI RETAINING WALL ELEVATION - 6	134
S-31	PARTIAL MAKAI RETAINING WALL ELEVATION - 7	135
S-32	PARTIAL MAKAI RETAINING WALL ELEVATION - 8	136
S-33	PARTIAL MAKAI RETAINING WALL ELEVATION - 9	137
S-34	PARTIAL MAKAI RETAINING WALL ELEVATION - 10	138
S-35	PARTIAL MAKAI RETAINING WALL ELEVATION - 11	139
S-36	PARTIAL MAKAI RETAINING WALL ELEVATION - 12	140

INDEX TO DRAWINGS

SHEET	DESCRIPTION	
S-37	PARTIAL MAKAI RETAINING WALL ELEVATION - 13	141
S-38	PARTIAL MAKAI RETAINING WALL ELEVATION - 14	142
S-39	PARTIAL MAUKA RETAINING WALL ELEVATION - 1	143
S-40	PARTIAL MAUKA RETAINING WALL ELEVATION - 2	144
S-41	PARTIAL MAUKA RETAINING WALL ELEVATION - 3	145
S-42	PARTIAL MAUKA RETAINING WALL ELEVATION - 4	146

ESTIMATED QUANTITIES

ITEM NO.	ITEM	QUAN.	UNIT
206.5001	Structure Excavation for CMU Noise Barrier / Retaining wall Foundation	1	ES
206.7251	Structure Backfill for CMU Noise B barrier / Retaining Wall	1	LS
503.1404	Concrete for Retaining Wall / Drain Manhole	1	LS
503.1409	Concrete for Retaining Wall Footings	1	LS
503.1410	Concrete for Noise Barrier Concrete Base	1	LS
513.0100	CMU Noise Barrier	1	LS
602.0050	Reinforcing Steel for Retaining Walls / Drain Manhole	1	LS
602.0051	Reinforcing Steel for Retaining Wall Footings	1	LS
602.0052	Reinforcing Steel for CMU Noise Barrier	1	LS
602.0053	Reinforcing Steel for Noise Barrier Concrete Base	1	LS

JONG NAMGUNG
LICENSED PROFESSIONAL ENGINEER
No. 3513-S
HAWAII, U.S.A.

THIS WORK WAS PREPARED BY ME OR UNDER MY SUPERVISION.

Jong Namgung

STATE OF HAWAII
DEPARTMENT OF TRANSPORTATION
HIGHWAYS DIVISION

DRAWING INDEX & ESTIMATED QUANTITIES

Honoapiilani Highway Widening
Lahainaluna Road to Aholo Road
Project No. STP-030-1(39)

Scale: AS SHOWN Date: October 2008

SHEET No. S-1 OF 42 SHEETS

ORIGINAL PLAN	SURVEY PLOTTED BY	DATE
	DRAWN BY	
	TRACED BY	"
NOTE BOOK	DESIGNED BY	"
	QUANTITIES BY	"
No.	CHECKED BY	"

PATH/FILENAME P:\Projects\Job-Hwy\Honoapiilani Highway Widening\Dwg\Working Drawings\Final Web 1-17-08 (STRUCT FINAL)\S-1.dwg

LAST UPDATE: 08-31-2008 @ 10:38 am PLOT DATE: 08-31-2008 @ 10:38 am

FED. ROAD DIST. NO.	STATE	PROJ. NO.	FISCAL YEAR	SHEET NO.	TOTAL SHEETS
HAWAII	HAW.	STP-030-1(39)	2008	107	194

GENERAL NOTES

1. GENERAL SPECIFICATIONS:
   State of Hawaii, Department of Transportation, "Standard Specifications For Road and Bridge Construction," 2005, and Special Provisions.

2. DESIGN SPECIFICATIONS:
   AASHTO "LRFD Bridge Design Specifications," Fourth Edition, 2007.
   AASHTO "Guide Specifications for Structural Design of Sound Barriers," 1989, including subsequent interim revisions.

3. DESIGN:
   A. Live Loads: HL-93
   B. Railing Test Level=TL-2
   C. Seismic: A=0.26
   D. Basic Wind Speed=105 mph
   E. Live Load Surcharge: 2 Feet

4. EARTH AND FOUNDATION:
   A. The foundation design is based on the recommendations in geotechnical report entitled "Geotechnical Engineering Exploration Honoapiilani Highway Widening Lahaina Road to Aholo Road, Lahaina, Maui, Hawaii," dated June 3, 2005, and addendum dated May 30, 2007, prepared by Geolabs, Inc.

   B. A copy of report is on file at the Engineer's office for review by the contractor, the foundation design is based on a bearing capacity as shown in the table below.

RETAINING WALL FOUNDATIONS

Description	Extreme Event Limit State	Strength Limit State	Service Limit State
Bearing Pressure (psf)	9,000	5,500	3,000
Coefficient of Sliding Friction	0.42	0.34	N/A
Passive Pressure Resistance (psf)	360	180	N/A

   C. All footings shall be founded at least 24 inches below lowest adjacent grade.

   D. All footing elevations, fill and backfill operations shall be observed and approved by the Geolabs, Inc. prior to the placement of reinforcing steel or concrete. Contractor shall make appropriate arrangement for observations as required.

   E. Clean and moisten footing trenches prior to pouring concrete. Where shrinkage cracks are noted after compaction of the footing subgrade, the soil shall be moisten to close all cracks.

   F. Do not place conduits and utility lines in footing trenches.

5. MATERIALS:
   A. Minimum concrete compressive strength (at 28 days) shall be as follows:
      1) Retaining Wall .....4,000 PSI
      2) Drain Manhole Structures .....4,000 PSI
      3) Sidewalk .....3,000 PSI
      4) Other Concrete Structure .....4,000 PSI

   B. All reinforcing steel shall conform to ASTM A615, grade 60, unless otherwise noted.

   C. Concrete masonry unit (CMU) wall materials shall conform to the following:
      1) Hollow concrete masonry units shall be normal weight load bearing units and shall meet the requirements of ASTM C90.
         a. The compressive strength of hollow units based on minimum net area shall attain not less than 2,000 psi 28 day compressive strength.
            Refer to AASHTO "Guide Specifications for Structural Design of Sound Barriers," 1989,including subsequent Interim Revisions – Sections 1-6.3.2, 1-6.3.3 A, C, D and 2-2.2 for required prism testing.

         b. The specified compressive strength of masonry (f'm) at the age of 28 days shall be based upon the provisions of the above-referenced AASHTO guide specifications, including subsequent interim revisions – Sections 1-6.3.2, and 1-6.3.3. The specified compressive strength of masonry at the age of 28 days shall attain not less than 1,500 psi.

      2) Mortar shall be Type M and attain not less than 2,500 psi 28 days compressive strength and shall conform to ASTM C387. Unless approved otherwise by the Engineer, hydrated lime shall conform to ASTM designation: C207, Type S (masonry cement and plastic cement are prohibited).

      3) Grout shall attain not less than 2,500 psi 28 day compressive strength.

      4) Horizontal joint reinforcing shall conform to ASTM A82

      5) Waterbased, water repellent penetrating sealer for masonry shall contain between 10 percent and 20 percent solids and shall be emulsions especially formulated for use on porous masonry.

6. REINFORCEMENT:
   A. Unless otherwise noted, the covering measured from the surface of the concrete to the face of any reinforcing bars shall be as follows:
      1) A) Top Bars = 2"
         B) Bottom Bars = 1-1/4"
         Conc. Barrier/Walls = 2"
         Conc. Retaining Walls = 2"
      2) Foundations = 2"
      3) Concrete cast against and permanently exposed to earth = 3"

   B. Reinforcing bars shall be detailed in accordance with AASHTO "LRFD Bridge Design Specifications," 4th edition, 2007.

   C. Minimum clear spacing between parallel bars shall be 1-1/2" times the diameter of the bar. But in no case shall the clear distance between the parallel bars be less than 1-1/2" times the maximum size of the coarse aggregate or 1-1/2 inches.

   D. Reinforcing bars shall be securely tied at all intersections and lap splices.

7. CONSTRUCTION NOTES:
   A. See Standard Specifications and Special Provisions.
   B. Unless otherwise noted, all vertical dimensions are measured plumb.
   C. The Contractor shall verify all site conditions before commencing with work.
   D. For concrete finish, see Standard Specifications.
   E. Construction joints may be relocated or additional ones added, subject to the approval of the Engineer.
   F. Unless otherwise noted all exposed concrete edges shall be chamfered 3/4"x3/4".
   G. Special inspection for CMU noise barrier walls and CIP concrete works in accordance with Chapter 17 of the Uniform Building Code as amended by the Maui County.

JONG NAMGUNG
LICENSED PROFESSIONAL ENGINEER
No. 3513-S
HAWAII, U.S.A.

THIS WORK WAS PREPARED BY ME OR UNDER MY SUPERVISION.

Jong Namgung

STATE OF HAWAII
DEPARTMENT OF TRANSPORTATION
HIGHWAYS DIVISION

GENERAL NOTES

Honoapiilani Highway Widening
Lahainaluna Road to Aholo Road
Project No. STP-030-1(39)

Scale: AS SHOWN Date: October 2008

SHEET No. S-2 OF 42 SHEETS

ORIGINAL PLAN | SURVEY PLOTTED BY ____ DATE | DRAWN BY " " | NOTE BOOK TRACED BY " " | DESIGNED BY " " | QUANTITIES BY " " | No. ____ CHECKED BY " "

PATH/FILENAME: P:\Projects\Oahu-Hwy\Honoapiilani Highway Widening\Geo\Working Drawings\From MAA 3-17-08 (STRUCT FINAL)\S-2.dwg LAST UPDATE: 10-29-2008 @ 04:55 pm PLOT DATE: 12-29-2008 @ 08:42 am

FED. ROAD DIST. NO.	STATE	PROJ. NO.	FISCAL YEAR	SHEET NO.	TOTAL SHEETS
HAWAII	HAW.	STP-030-1(39)	2008	108	194

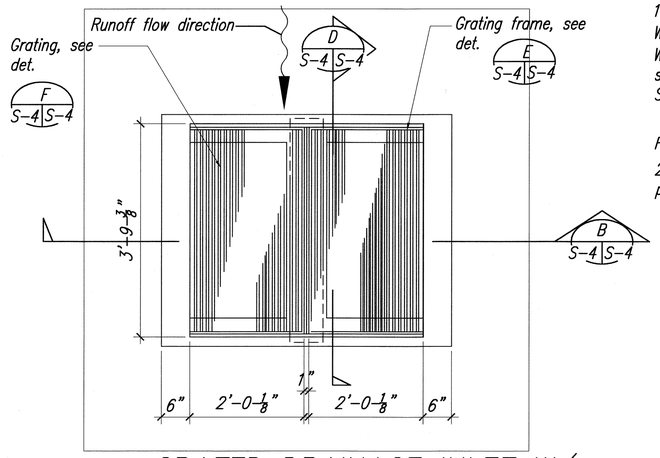

GRATED DRAINAGE INLET W/ "TYPE 1" DRYWELL PLAN

A S-4 S-4 Scale: 3/4" = 1'-0"

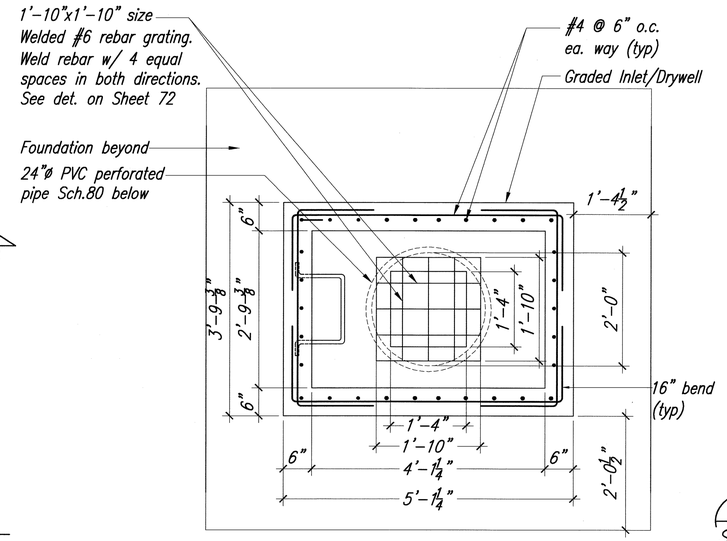

PLAN SECTION

C S-4 S-4 Scale: 3/4" = 1'-0"

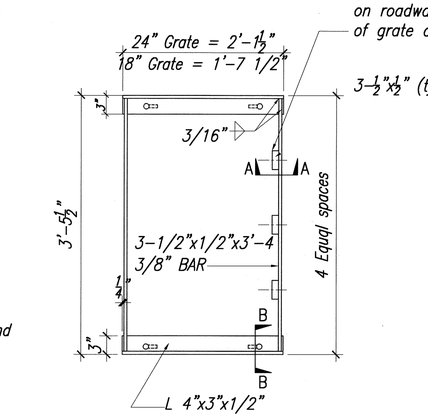

GRATING FRAME DETAIL

E S-4 S-4 Scale: 1" = 1'-0"

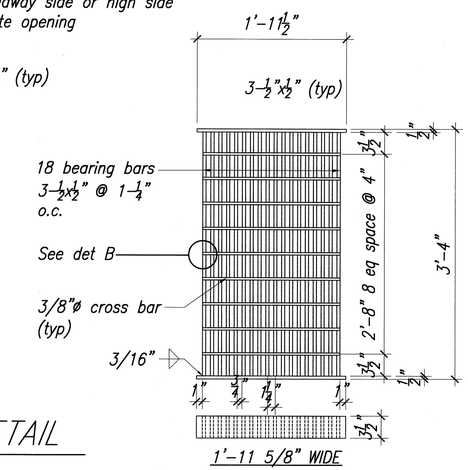

NOTES:

1. GRATES AND FRAMES SHALL BE GALVANIZED.
2. ROUNDED TOP OF BARS OPTIONAL ON ALL GRATES.
3. GRATE SHALL BE PLACED SO THAT BARS PARALLEL TO THE DIRECTION OF PRINCIPLE SURFACE FLOW.

WELDED GRATING DETAIL

F S-4 S-4 Scale: 1" = 1'-0"

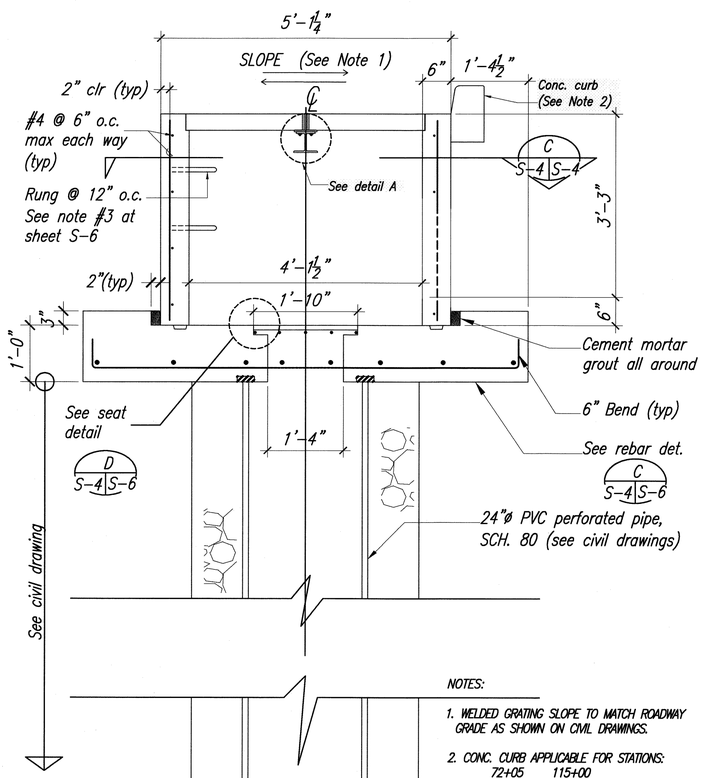

NOTES:

1. WELDED GRATING SLOPE TO MATCH ROADWAY GRADE AS SHOWN ON CIVIL DRAWINGS.
2. CONC. CURB APPLICABLE FOR STATIONS:

72+05	115+00
75+15	118+31
77+15	121+50
107+85	125+00
111+50	

SECTION DETAIL

B S-4 S-4 Scale: 3/4" = 1'-0"

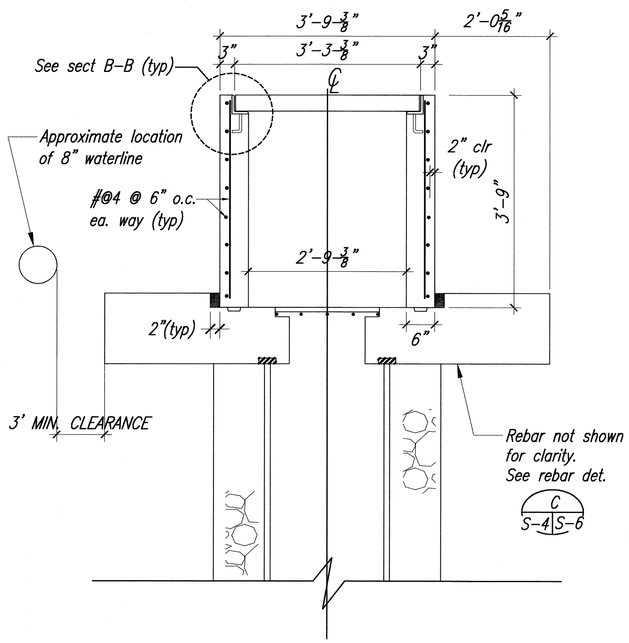

SECTION DETAIL

D S-4 S-4 Scale: 3/4" = 1'-0"

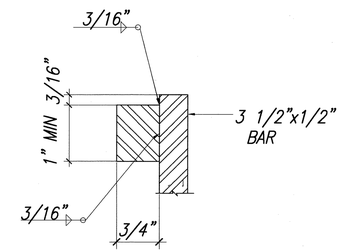

SECTION A-A

Scale: 3" = 1'-0"

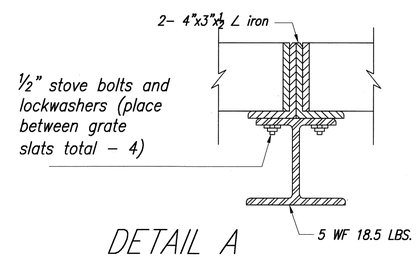

DETAIL A

Scale: 3" = 1'-0"

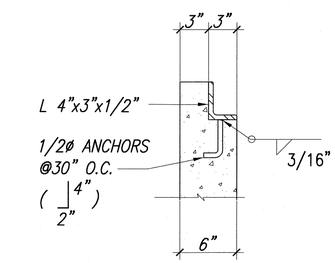

SECTION B-B

Scale: 1-1/2" = 1'-0"

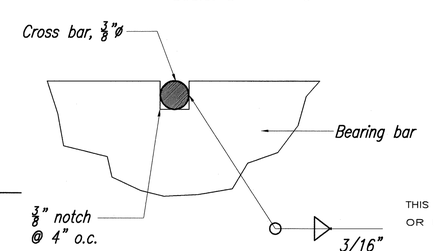

DETAIL B

True scale

JONG NAMGUNG LICENSED PROFESSIONAL ENGINEER No. 3513-S HAWAII, U.S.A.

THIS WORK WAS PREPARED BY ME OR UNDER MY SUPERVISION.

Jong Namgung

STATE OF HAWAII
DEPARTMENT OF TRANSPORTATION
HIGHWAYS DIVISION

GRATE DRAINAGE INLET PLAN/SECTION & DETAILS

Honoapiilani Highway Widening
Lahainaluna Road to Aholo Road
Project No. STP-030-1(39)

Scale: AS SHOWN Date: October 2008

SHEET No. S-4 OF 42 SHEETS

ORIGINAL PLAN	SURVEY PLOTTED BY	DATE
	DRAWN BY	"
NOTE BOOK	TRACED BY	"
	DESIGNED BY	"
	QUANTITIES BY	"
No.	CHECKED BY	"

PATH/FILENAME: P:\Projects\Oahu-Hwy\Honoapiilani Highway Widening\Geo\Working Drawings\From MAA 3-17-08 (STRUCT FINAL)\S-4 GRATE DRAINAGE INLET PLAN-SECTION.DWG LAST UPDATE: 50-28-2008 @ 04:50 pm PLOT DATE: 46-29-2008 @ 08:46 am

FED. ROAD DIST. NO.	STATE	PROJ. NO.	FISCAL YEAR	SHEET NO.	TOTAL SHEETS
HAWAII	HAW.	STP-030-1(39)	2008	109	194

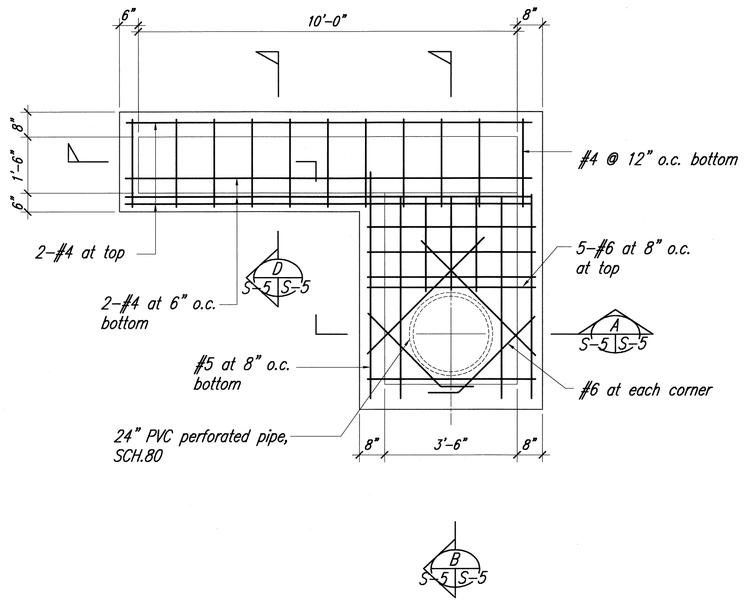

1 S-5 S-5 TYPE "B1" CATCH BASIN / DRYWELL - PLAN
SCALE: 1/2" = 1'-0"

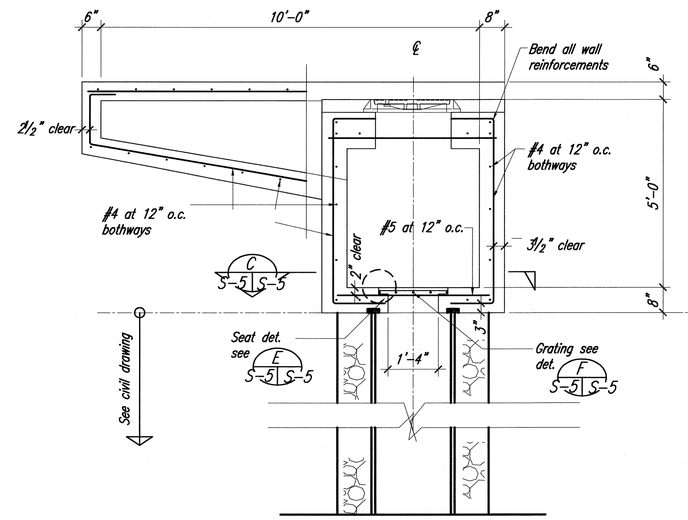

A S-5 S-5 CATCH BASIN / DRYWELL - SECTION
SCALE: 1/2" = 1'-0"

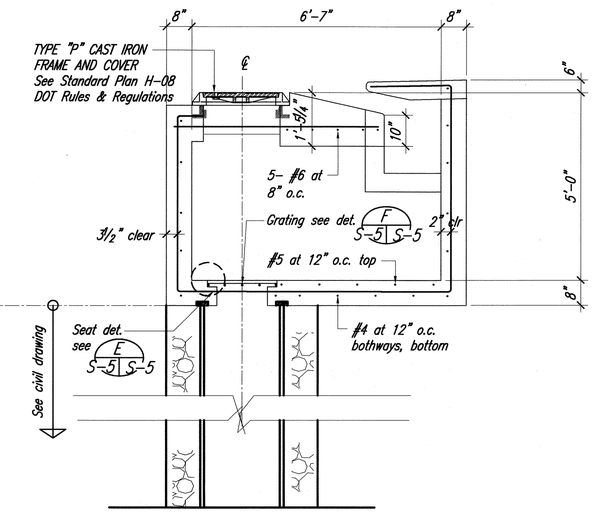

B S-5 S-5 CATCH BASIN / DRYWELL - SECTION
SCALE: 1"/2 = 1'-0"

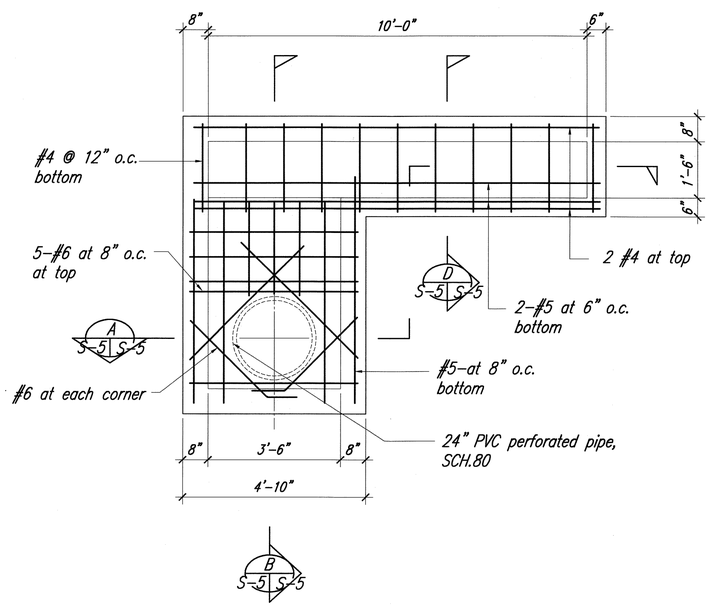

2 S-5 S-5 TYPE "C1" CATCH BASIN / DRYWELL - PLAN
SCALE: 1/2" = 1'-0"

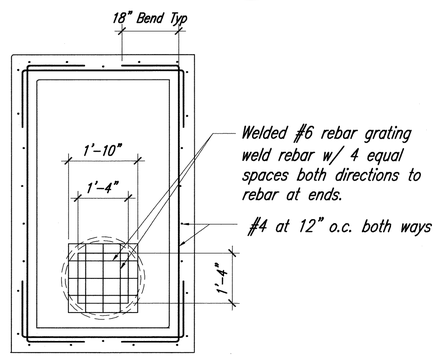

C S-5 S-5 CATCH BASIN - PLAN / SECTION
SCALE: 1/2" = 1'-0"

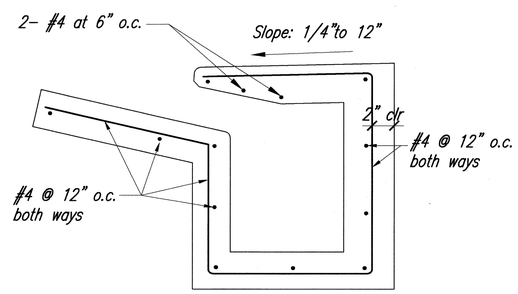

D S-5 S-5 SECTION DETAIL
SCALE: 1" = 1'-0"

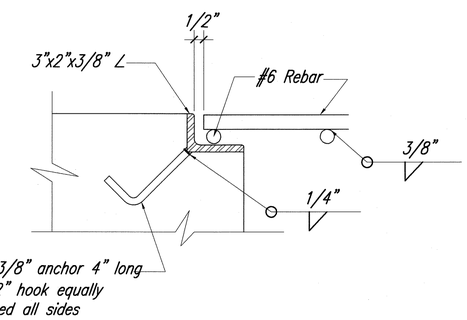

E S-5 S-5 SEAT DETAIL
SCALE: 3" = 1'-0"

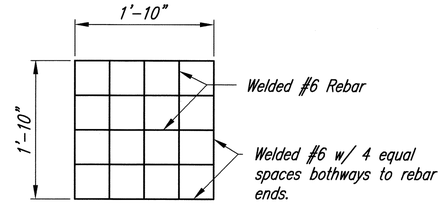

F S-5 S-5 REBAR GRATING - PLAN
SCALE: 1" = 1'-0"

JONG NAMGUNG
LICENSED PROFESSIONAL ENGINEER
No. 3513-S
HAWAII, U.S.A.

THIS WORK WAS PREPARED BY ME OR UNDER MY SUPERVISION.

Jong Namgung

STATE OF HAWAII
DEPARTMENT OF TRANSPORTATION
HIGHWAYS DIVISION

TYPE "B1" & "C1" CATCH BASIN/DRYWELL PLAN/SECTION & DETAILS

Honoapiilani Highway Widening
Lahainaluna Road to Aholo Road
Project No. STP-030-1(39)

Scale: AS SHOWN Date: October 2008

SHEET No. S-5 OF 42 SHEETS

ORIGINAL PLAN | SURVEY PLOTTED BY | DRAWN BY | TRACED BY | DESIGNED BY | QUANTITIES BY | CHECKED BY | DATE
NOTE BOOK No.

PATH/FILENAME: P:\Projects\Oahu-Hwy\Honoapiilani Highway Widening\dwg\Working Drawings\From MAA 3-17-08 (STRUCT FINAL)\S-5 TYPE B-CATCH BASIN-DRYWELL.DWG LAST UPDATE: 36-03-2008 @ 01:36 pm PLOT DATE: 47-29-2008 @ 08:47 am

FED. ROAD DIST. NO.	STATE	PROJ. NO.	FISCAL YEAR	SHEET NO.	TOTAL SHEETS
HAWAII	HAW.	STP-030-1(39)	2008	110	194

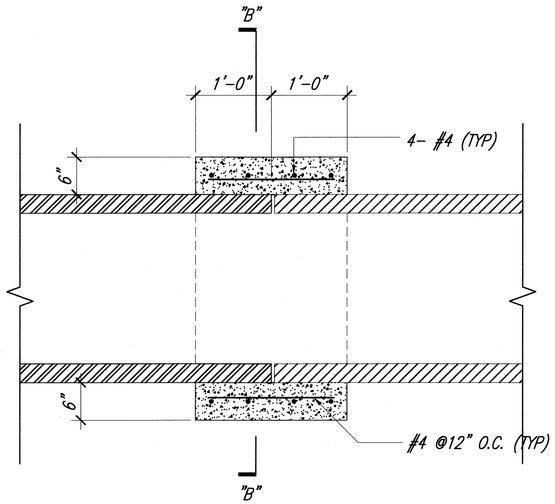

SECTION "A" – "A"

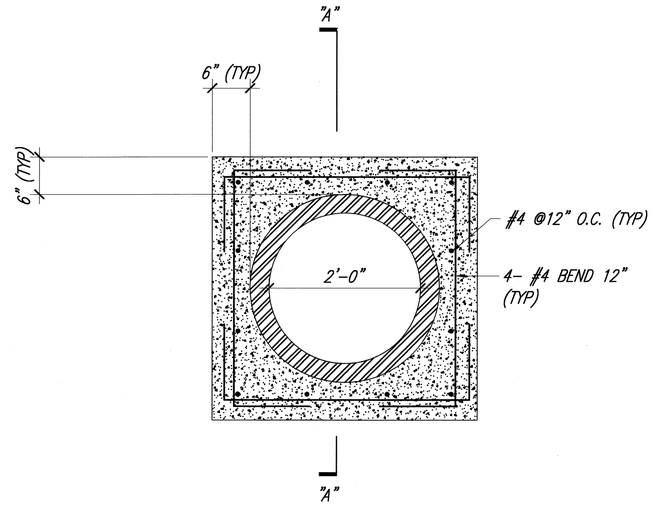

SECTION "B" – "B"

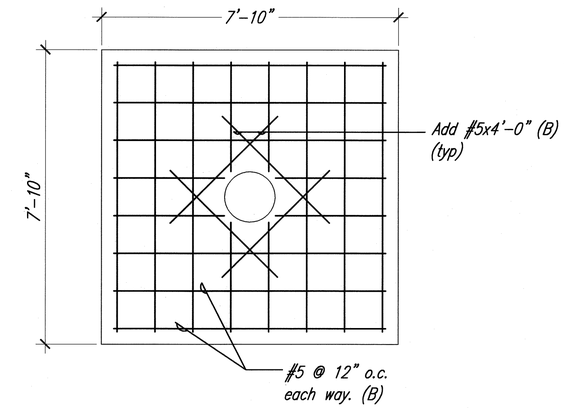

C S-4 S-6 FOUNDATION PLAN – REBAR DETAIL

SCALE: 1/2" = 1'=0"

A S-7 S-6 CONCRETE PIPE COLLAR DETAIL

S-8, S-9

SCALE: 1" = 1'=-0"

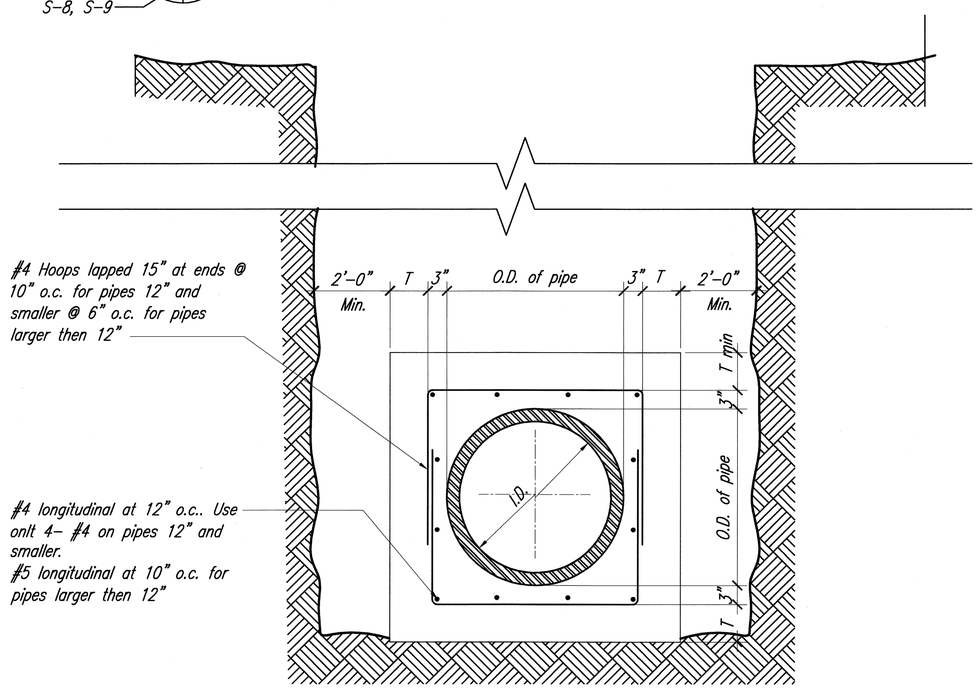

I.D. of pipe	T
10"	4"
16"	5"
21"	6"

B S-6 S-6 CONCRETE PIPE JACKET DETAIL

SCALE: 1" = 1'=0"

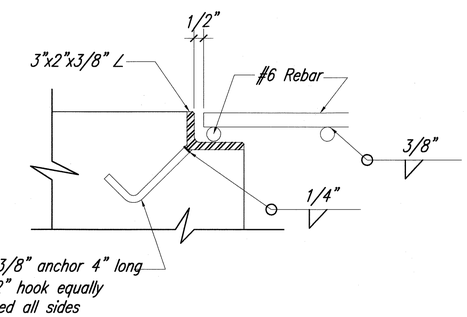

D S-4 S-6 GRATING AND SEAT DETAIL

SCALE: 3" = 1'=0"

JONG NAMGUNG
LICENSED PROFESSIONAL ENGINEER
No. 3513-S
HAWAII, U.S.A.

THIS WORK WAS PREPARED BY ME OR UNDER MY SUPERVISION.

Jong Namgung

STATE OF HAWAII
DEPARTMENT OF TRANSPORTATION
HIGHWAYS DIVISION

CONCRETE PIPE CONNECTION COLLAR DETAIL
CONCRETE PIPE JACKET DETAIL

Honoapiilani Highway Widening
Lahainaluna Road to Aholo Road
Project No. STP-030-1(39)

Scale: AS SHOWN Date: October 2008

SHEET No. S-6 OF 42 SHEETS

110

ORIGINAL PLAN	SURVEY PLOTTED BY	DATE
	DRAWN BY	"
NOTE BOOK	TRACED BY	"
	TYPED BY	"
	QUANTITIES BY	"
No.	CHECKED BY	"

PATH/FILENAME: P:\Projects\Old-Hwy\Honoapiilani Highway Widening\Dwg\Working Drawings\From MAA 3-17-08 (STRUCT FINAL)\S-6 PIPE CONN COLLAR-CONC JACKET.DWG LAST UPDATE: 40-03-2008 @ 01:40 pm PLOT DATE: 50-29-2008 @ 08:50 am

FED. ROAD DIST. NO.	STATE	PROJ. NO.	FISCAL YEAR	SHEET NO.	TOTAL SHEETS
HAWAII	HAW.	STP-030-1(39)	2008	111	194

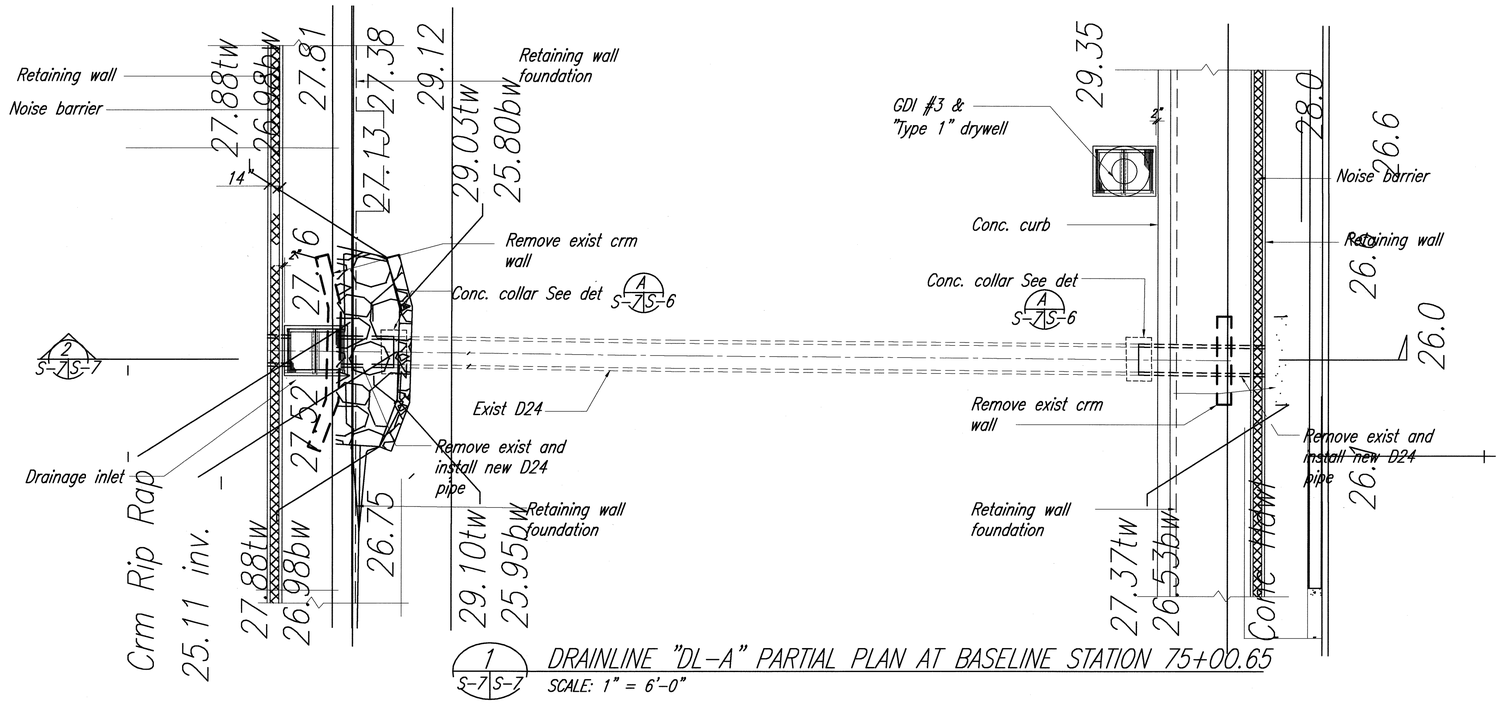

1 S-7 S-7 DRAINLINE "DL-A" PARTIAL PLAN AT BASELINE STATION 75+00.65

SCALE: 1" = 6'-0"

NOTE:
1. See Drainline Profiles Sht. 104

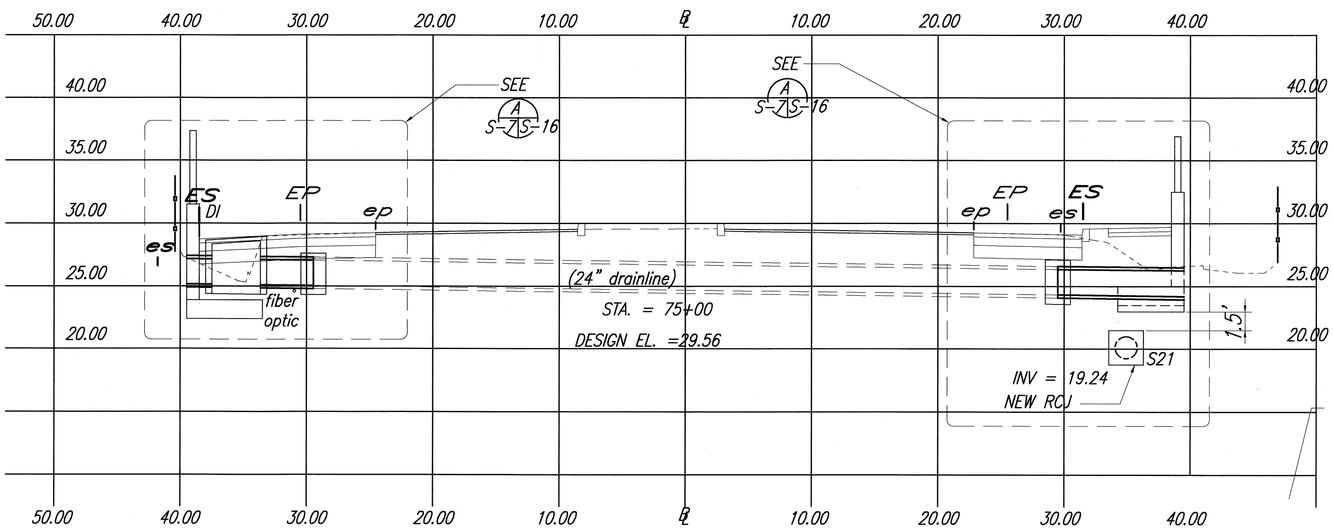

2 S-7 S-7 DRAINLINE "DL-A" PROFILE AT BASELINE STATION 75+00.65

SCALE: 1" = 6'-0"

JONG NAMGUNG
LICENSED PROFESSIONAL ENGINEER
No. 3513-S
HAWAII, U.S.A.

THIS WORK WAS PREPARED BY ME OR UNDER MY SUPERVISION.

Jong Namgung

STATE OF HAWAII
DEPARTMENT OF TRANSPORTATION
HIGHWAYS DIVISION

DRAINLINE "DL-A"
PLAN & PROFILE

Honoapiilani Highway Widening
Lahainaluna Road to Aholo Road
Project No. STP-030-1(39)

Scale: AS SHOWN Date: October 2008

SHEET No. S-7 OF 42 SHEETS

ORIGINAL PLAN | SURVEY PLOTTED BY | DRAWN BY | TRACED BY | DESIGNED BY | QUANTITIES BY | CHECKED BY | DATE
NOTE BOOK No.

PATH/FILENAME: P:\Projects\(04-Hwy)\Honoapiilani Highway Widening\Dwg\Working Drawings\From MAA 3-17-08 (STRUCT FINAL)\S-7 DRAIN LINE DL-A.DWG LAST UPDATE: 42-03-2008 @ 01:42 pm PLOT DATE: 51-29-2008 @ 08:51 am

FED. ROAD DIST. NO.	STATE	PROJ. NO.	FISCAL YEAR	SHEET NO.	TOTAL SHEETS
HAWAII	HAW.	STP-030-1(39)	2008	112	194

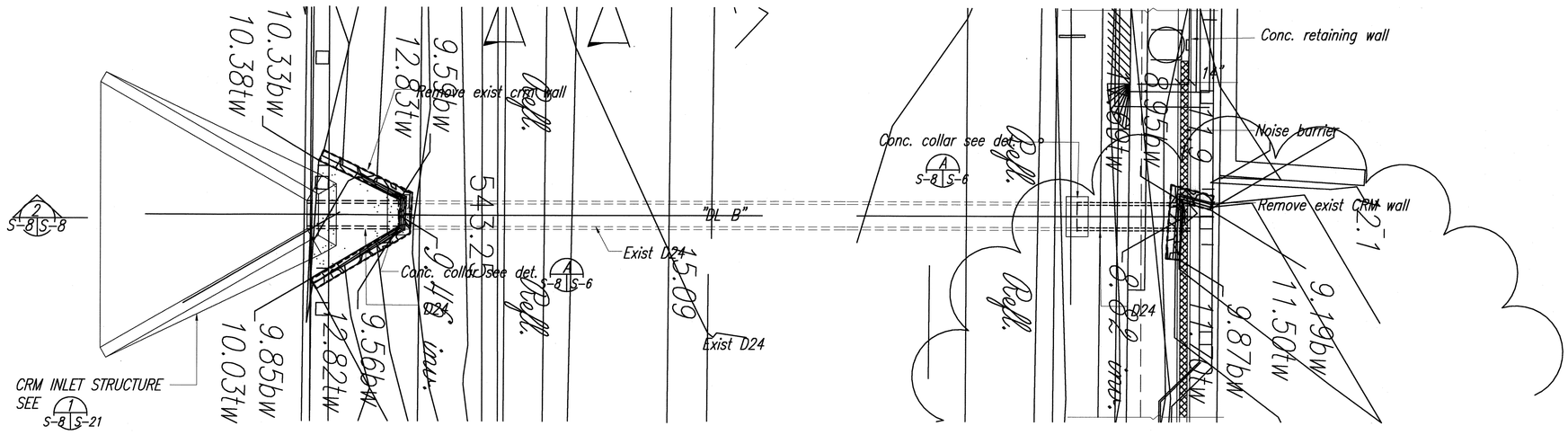

1 S-8 S-8 DRAINLINE "DL-B" PARTIAL PLAN AT BASELINE STATION 95+36.30

SCALE: 1' = 6'-0"

NOTE:
1. See Drainline Profiles Sht. 104

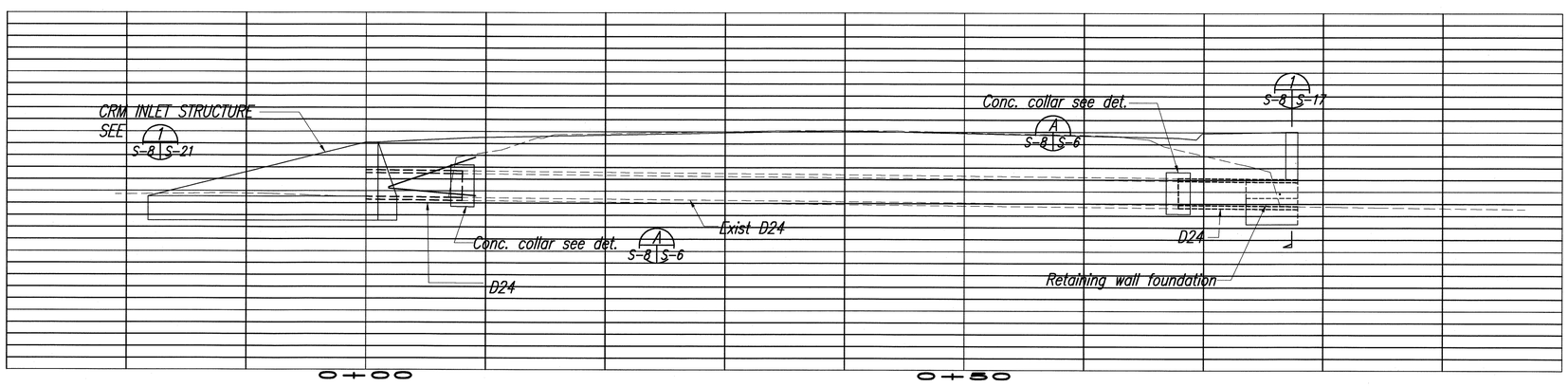

2 S-8 S-8 DRAINLINE "DL-B" PROFILE AT BASELINE STATION 95+36.30

SCALE: 1' = 6'-0"

ORIGINAL PLAN	SURVEY PLOTTED BY	DATE
	DRAWN BY	"
	TRACED BY	"
NOTE BOOK	DESIGNED BY	"
	QUANTITIES BY	"
No.	CHECKED BY	"

PATH/FILENAME: P:\Projects\Job-nwy\honoapiilani Highway Widening\Dwg\Working Drawings\From MAA 3-17-08 (STRUCT FINAL)\S-8 DRAIN LINE DL-B.DWG LAST UPDATE: 45-18-2008 @ 02:45 pm PLOT DATE: 03-29-2008 @ 09:03 am

JONG NAMGUNG
LICENSED PROFESSIONAL ENGINEER
No. 3513-S
HAWAII, U.S.A.

THIS WORK WAS PREPARED BY ME OR UNDER MY SUPERVISION.

Jong Namgung

STATE OF HAWAII
DEPARTMENT OF TRANSPORTATION
HIGHWAYS DIVISION

DRAINLINE "DL-B" PLAN AND PROFILE AT BASELINE STATION 95+36.30

Honoapiilani Highway Widening
Lahainaluna Road to Aholo Road
Project No. STP-030-1(39)

Scale: AS SHOWN Date: October 2008

SHEET No. S-8 OF 42 SHEETS

FED. ROAD DIST. NO.	STATE	PROJ. NO.	FISCAL YEAR	SHEET NO.	TOTAL SHEETS
HAWAII	HAW.	STP-030-1(39)	2008	113	194

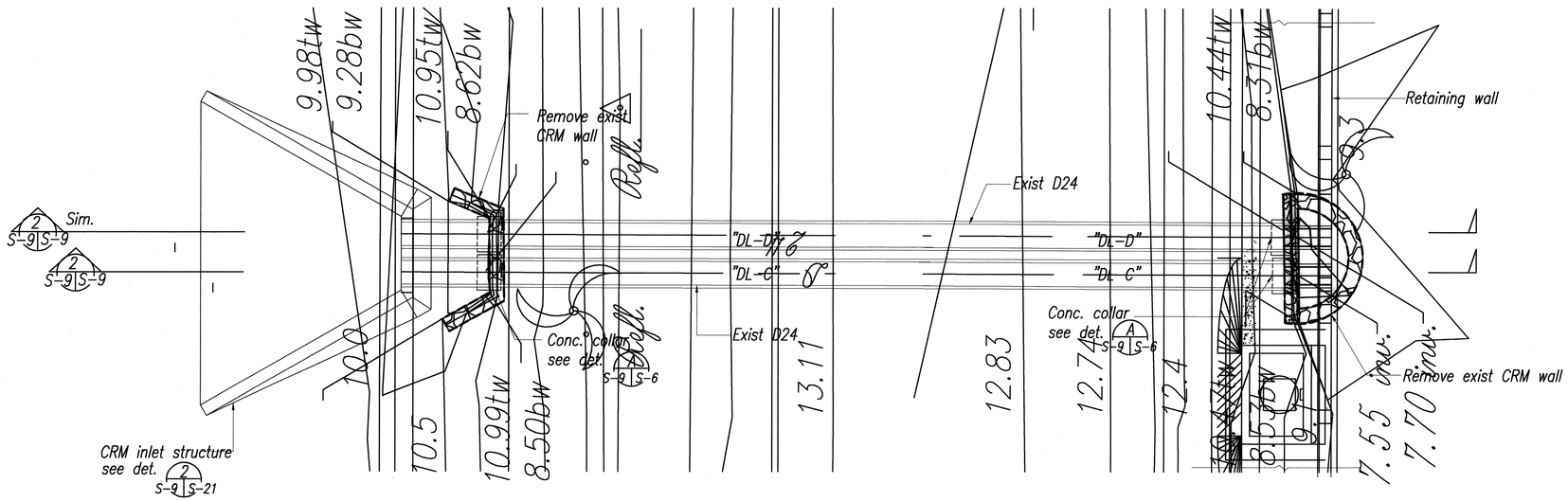

1 S-9 S-19 DRAINLINE "DL-C" & "DL-D" PARTIAL PLAN AT BASELINE STATION 99+60.03 & 99+63.26

SCALE: 1' = 6'-0"

NOTE:
1. See Drainline Profiles Sht. 104

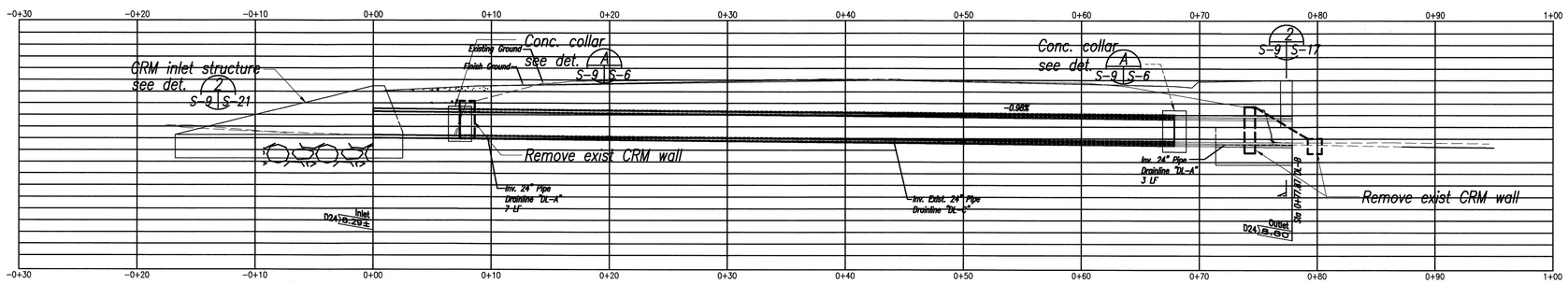

2 S-9 S-9 DRAINLINE "DL-C" PROFILE @ BASELINE STATION 99+60.03
(DRAINLINE "DL-D" PROFILE @ BASELINE STATION 99+63.26 SIM.)

SCALE: 1' = 6'-0"

ORIGINAL PLAN	SURVEY PLOTTED BY	DATE
	DRAWN BY	"
NOTE BOOK	TRACED BY	"
	DESIGNED BY	"
	QUANTITIES BY	"
No.	CHECKED BY	"

PATH/FILENAME: P:\Projects\Oahu-Hwy\Honoapiilani Highway Widening\dwg\Working Drawings\From MAR 3-17-08 (STRUCT FINAL)\S-9 DRAIN LINE DL-C & DL-D.DWG LAST UPDATE: 40-03-2008 @ 02:40 pm PLOT DATE: 04-29-2008 @ 09:04 am

THIS WORK WAS PREPARED BY ME OR UNDER MY SUPERVISION.

JONG NAMGUNG LICENSED PROFESSIONAL ENGINEER No. 3513-S HAWAII, U.S.A.

Jong Namgung

STATE OF HAWAII
DEPARTMENT OF TRANSPORTATION
HIGHWAYS DIVISION

DRAINLINE "DL-C" & "DL-D" AT BASELINE STATION 99+60.03 & 99+63.26

Honoapiilani Highway Widening
Lahainaluna Road to Aholo Road
Project No. STP-030-1(39)

Scale: AS SHOWN Date: October 2008

SHEET No. S-9 OF 42 SHEETS

FED. ROAD DIST. NO.	STATE	PROJ. NO.	FISCAL YEAR	SHEET NO.	TOTAL SHEETS
HAWAII	HAW.	STP-030-1(39)	2008	114	194

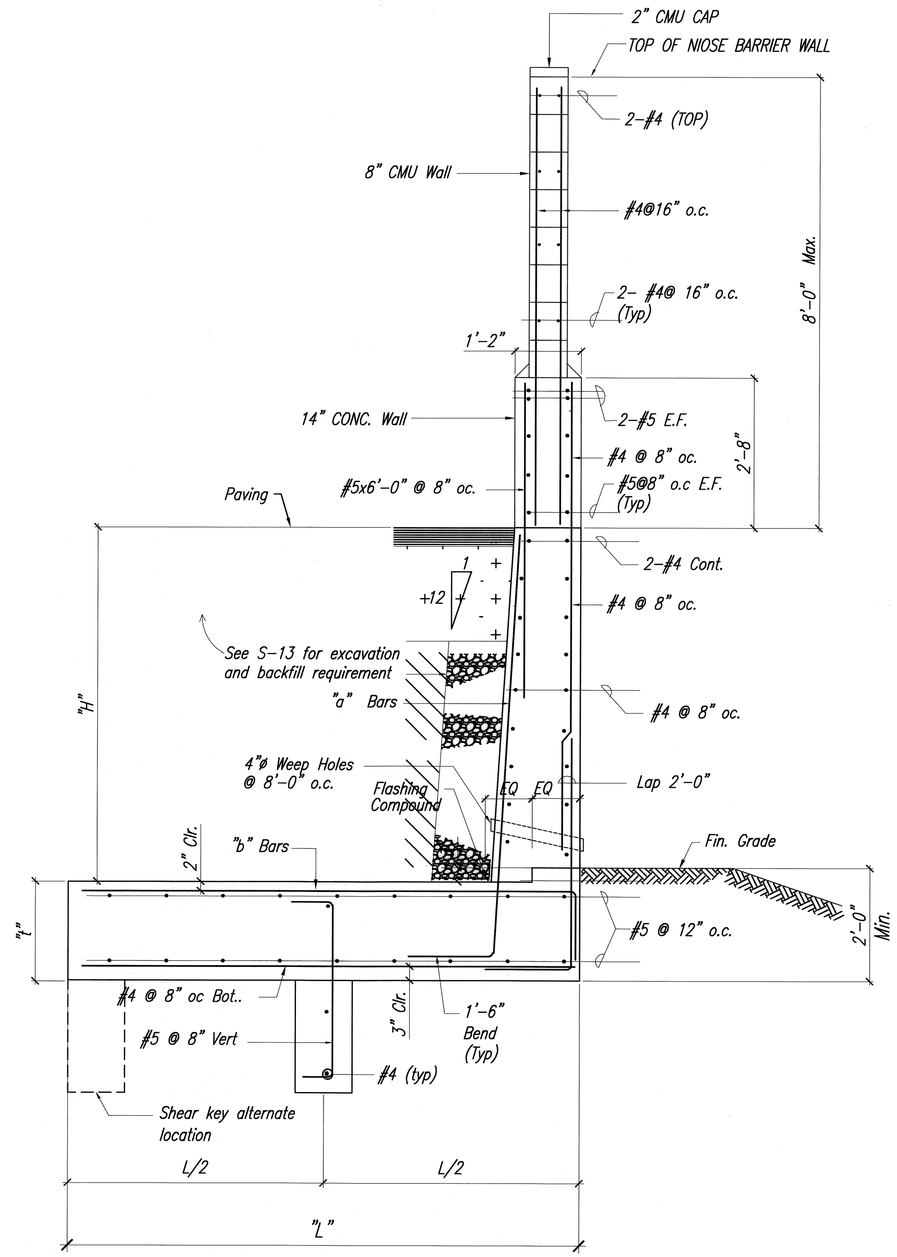

Note:
See Civil Drawings, Roadway Cross Section for shear key location.

S-26 S-34
S-27 S-35
S-28 S-36
S-29 S-37
S-30 S-38
S-31 S-42

1 TYPE-1 RETAINING WALL DETAILS
S-25 | S-10 N.T.S.

RETAINING WALL SCHEDULE

"H" (MAXIMUM)	3 '-0"	4'-0"	5'-0"	6'-0"	7'-0"	8'-0"	9'-0"
"L" (FTG. WIDTH)	4'-6"	5'-3"	6'-0"	7'-0"	7'-6"	8'-6"	9'-6"
"B" (STEM WIDTH) (TOP)	1'-2"	1'-2"	1'-2"	1'-2"	1'-2"	1'-2"	1'-2"
"t" (FTG. THICK.)	1'-6"	1'-6"	1'-6"	1'-9"	1'-9"	2'-0"	2'-0"
Key (width x depth)	1'-0"x1'-6"	1'-0"x1'-6"	1'-0"x1'-6"	1'-0"x1'-9"	1'-0"x1'-9"	1'-0"x2'-0"	1'-0"x2'-0"
"a" Bars	#5@8"oc.	#5@8"oc.	#5@8"oc.	#5@8"oc.	#5@8"oc.	#6@8"oc.	#6@8"oc.
"b" Bars	#5@8"oc.	#5@8"oc.	#5@8"oc.	#5@8"oc.	#5@8"oc.	#6@8"oc.	#6@8"oc.

JONG NAMGUNG
LICENSED PROFESSIONAL ENGINEER
No. 3513-S
HAWAII, U.S.A.

THIS WORK WAS PREPARED BY ME OR UNDER MY SUPERVISION.

Jong Namgung

STATE OF HAWAII
DEPARTMENT OF TRANSPORTATION
HIGHWAYS DIVISION

TYPE-1 RETAINING WALL DETAILS

Honoapiilani Highway Widening
Lahainaluna Road to Aholo Road
Project No. STP-030-1(39)

Scale: AS SHOWN Date: October 2008

SHEET No. S-10 OF 42 SHEETS

114

ORIGINAL PLAN | SURVEY PLOTTED BY | DRAWN BY | TRACED BY | DESIGNED BY | QUANTITIES BY | CHECKED BY | DATE
NOTE BOOK No.

PATH/FILENAME: P:\Projects\Dot-Hwy\Honoapiilani Highway Widening\Lahainaluna\Working Drawings\From MAA 3-17-08 [STRUCT FINAL]\S-10 TYPE-1 RETAINING WALL DETAILS.dwg LAST UPDATE: 25-14-2008 @ 04:25 pm PLOT DATE: 05-29-2008 @ 09:50 am

FED. ROAD DIST. NO.	STATE	PROJ. NO.	FISCAL YEAR	SHEET NO.	TOTAL SHEETS
HAWAII	HAW.	STP-030-1(39)	2008	115	194

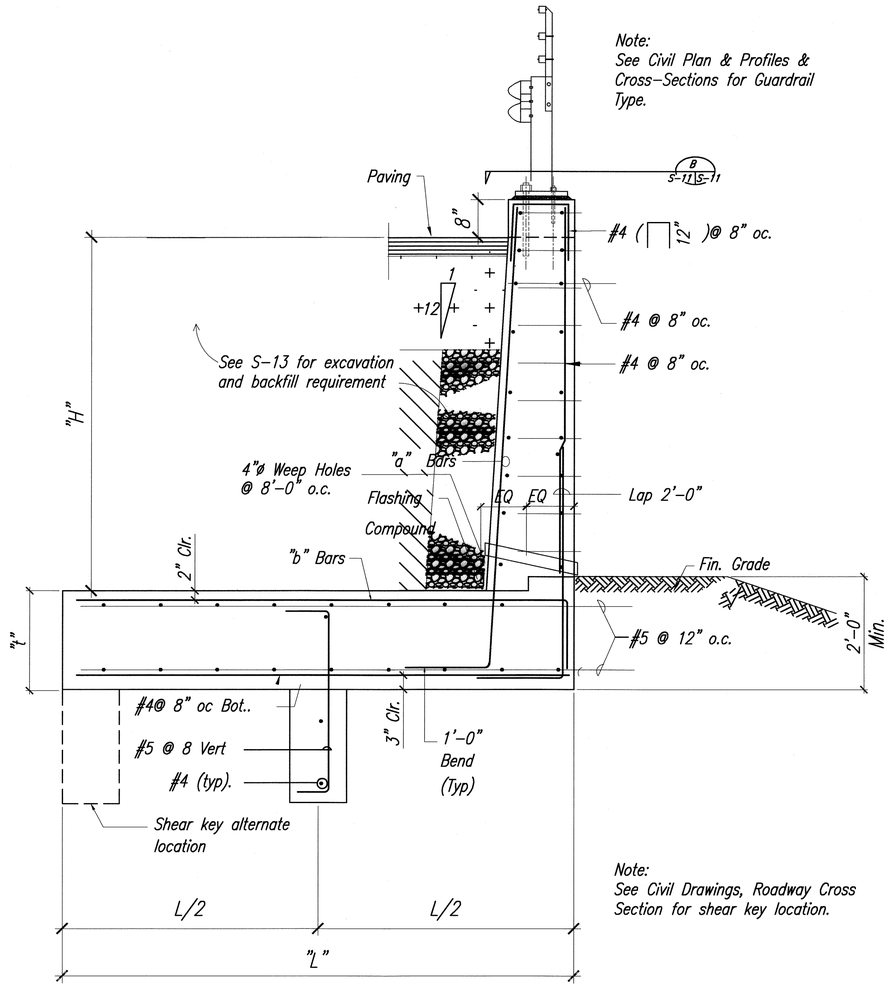

Note:
See Civil Drawings, Roadway Cross Section for shear key location.

1 TYPE - 2 RETAINING WALL DETAILS
S-29 S-11 N.T.S.

S-30 S-33
S-31 S-34
S-32 S-41

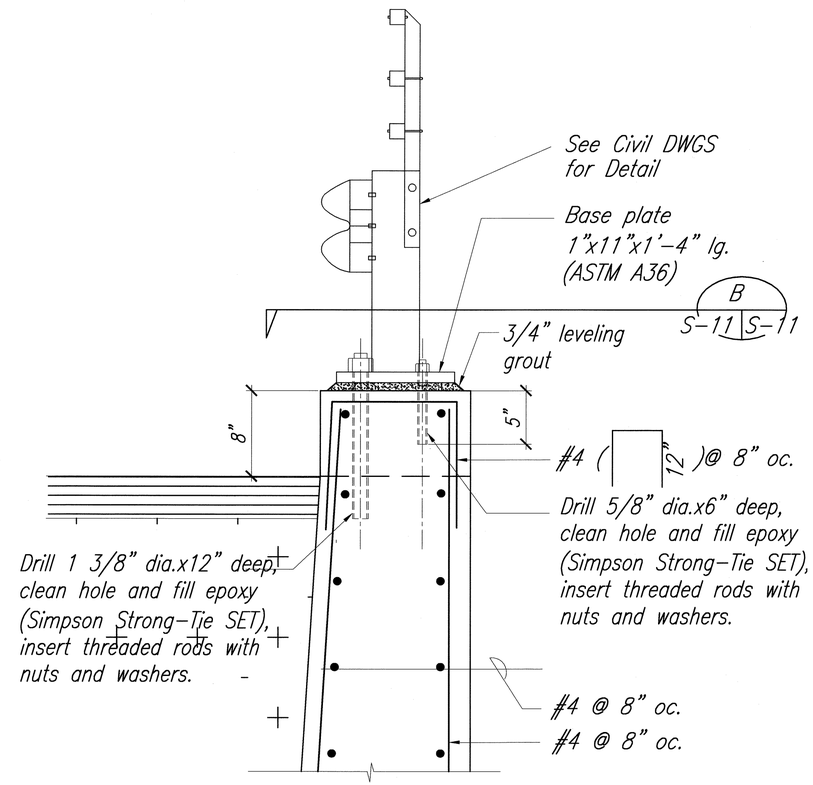

A BASE PLATE SECTION
S-11 S-11 SCALE: 1-½" = 1'-0"

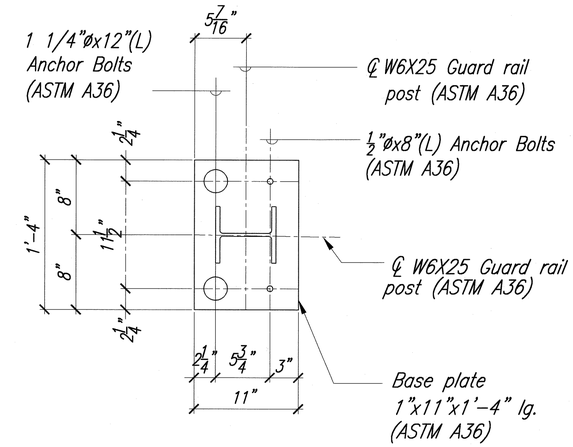

ANCHOR BOLT NOTES:

1.) All bolts shall be high strength bolts confirming to ASTM A490 and shall be hot dip galvanized

B BASE PLATE PLAN
S-11 S-11 SCALE: 1-½" = 1'-0"

RETAINING WALL SCHEDULE

"H" (Maximum)	3'-0"	4'-0"	5'-0"	6'-0"	7'-0"	8'-0"	9'-0"	
"L" (Ftg. width)	4'-0"	4'-9"	5'-3"	6'-6"	7'-0"	8'-0"	9'-0"	
"B" (Stem width) (Top)	1'-2"	1'-2"	1'-2"	1'-2"	1'-2"	1'-2"	1'-2"	
"t" (Ftg. thick.)	1'-6"	1'-6"	1'-6"	1'-9"	1'-9"	2'-0"	2'-0"	
Key (widthxdepth)	1'-0"x1'-6"	1'-0"x1'-6"	1'-0"x1'-6"	1'-0"x1'-9"	1'-0"x1'-9"	1'-0"x2'-0"	1'-0"x2'-0"	
"a" Bars	#4@8"oc.	#4@8"oc.	#4@8"oc.	#5@8"oc.	#5@8"oc.	#5@8"oc.	#5@8"oc.	
"b" Bars	#4@8"oc.	#4@8"oc.	#4@8"oc.	#5@8"oc.	#5@8"oc.	#5@8"oc.	#6@8"oc.	

JONG NAMGUNG LICENSED PROFESSIONAL ENGINEER No. 3513-S HAWAII, U.S.A.

THIS WORK WAS PREPARED BY ME OR UNDER MY SUPERVISION.

Jong Namgung

STATE OF HAWAII
DEPARTMENT OF TRANSPORTATION
HIGHWAYS DIVISION

TYPE-2 RETAINING WALL DETAILS

Honoapiilani Highway Widening
Lahainaluna Road to Aholo Road
Project No. STP-030-1(39)

Scale: AS SHOWN Date: October 2008

SHEET No. S-11 OF 42 SHEETS

ORIGINAL PLAN | SURVEY PLOTTED BY | DRAWN BY | TRACED BY | DESIGNED BY | QUANTITIES BY | CHECKED BY | DATE
NOTE BOOK No.

PATH/FILENAME: P:\Projects\Oahu-Hwy\Kaanapali Highway Widening\Dwg\Working Drawings\From MAA 3-17-08 (STRUCT FINAL)\S-11 TYPE-2 RETAINING WALL DETAILS.dwg LAST UPDATE: 25-14-2008 @ 04:25 pm PLOT DATE: 06-29-2008 @ 09:06 am

FED. ROAD DIST. NO.	STATE	PROJ. NO.	FISCAL YEAR	SHEET NO.	TOTAL SHEETS
HAWAII	HAW.	STP-030-1(39)	2008	116	194

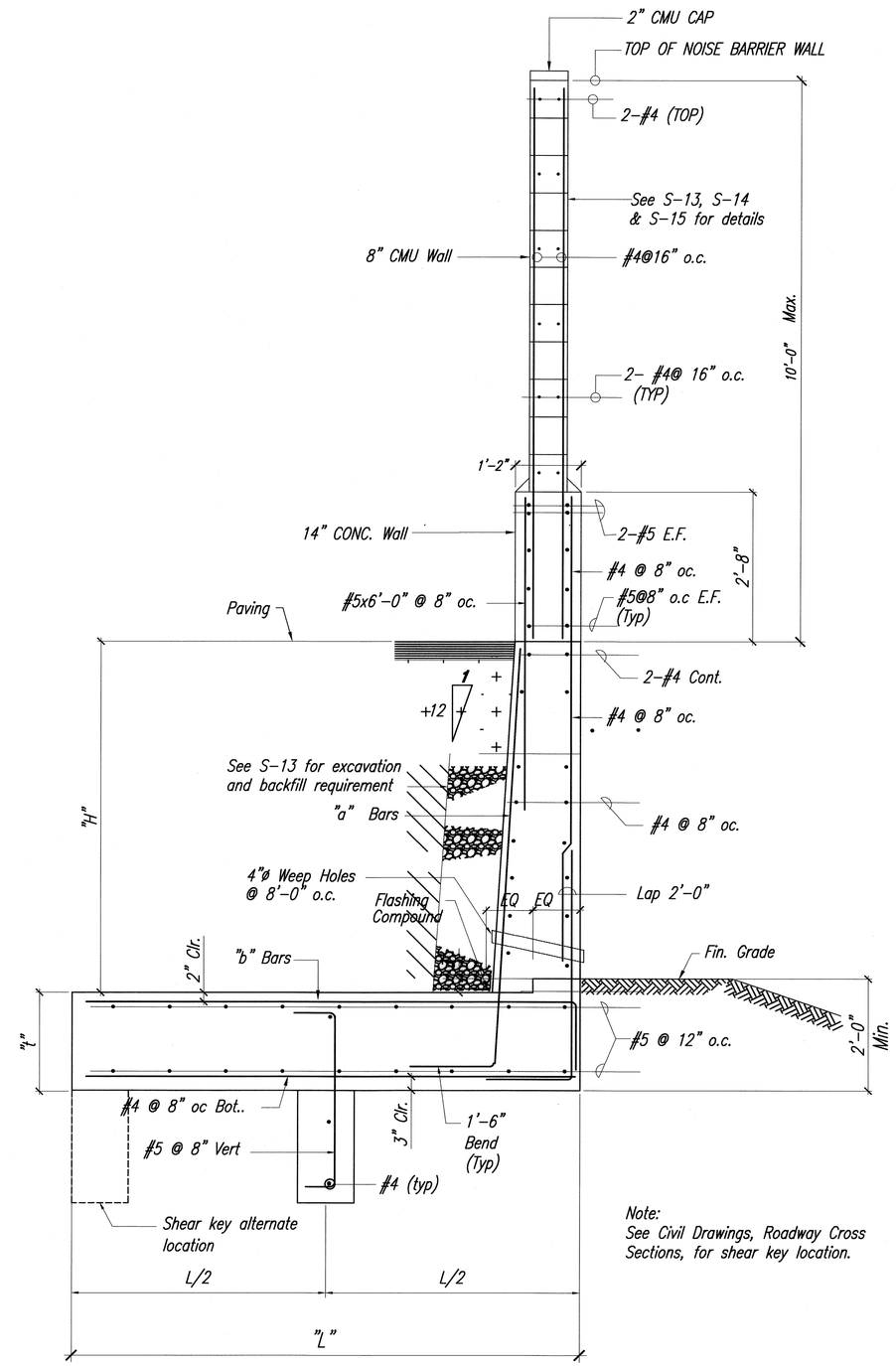

Note:
See Civil Drawings, Roadway Cross Sections, for shear key location.

RETAINING WALL SCHEDULE

"H" (MAXIMUM)	3'-0"	4'-0"	5'-0"	6'-0"	7'-0"	8'-0"	9'-0"	10'-0"	11'-0"
"L" (FTG. WIDTH)	4'-6"	5'-3"	6'-0"	7'-0"	7'-6"	8'-6"	9'-6"	9'-6"	12'-0"
"B" (STEM WIDTH) (TOP)	1'-2"	1'-2"	1'-2"	1'-2"	1'-2"	1'-2"	1'-2"	1'-2"	1'-2"
"t" (FTG. THICK.)	1'-6"	1'-6"	1'-6"	1'-9"	1'-9"	2'-0"	2'-3"	2'-6"	2'-6"
Key (width x depth)	1'-0"x1'-6"	1'-0"x1'-6"	1'-0"x1'-6"	1'-0"x1'-9"	1'-0"x1'-9"	1'-0"x2'-0"	1'-0"x2'-3"	1'-0"x2'-6"	1'-0"x2'-6"
"a" Bars	#5@6"oc.	#5@6"oc.	#5@6"oc.	#5@6"oc.	#6@6"oc.	#6@6"oc.	#6@4"oc.	#6@4"oc.	#6@4"oc.
"b" Bars	#5@6"oc.	#5@6"oc.	#5@6"oc.	#5@6"oc.	#6@6"oc.	#6@6"oc.	#6@4"oc.	#6@4"oc.	#6@4"oc.

1 TYPE-3 RETAINING WALL DETAILS
S-39 | S-12 N.T.S.
S-40, S-41, S-42

ORIGINAL PLAN	SURVEY PLOTTED BY	DATE
	DRAWN BY	"
NOTE BOOK	TRACED BY	"
	DESIGNED BY	"
	QUANTITIES BY	"
No.	CHECKED BY	"

PATH/FILENAME: P:\Projects\Oahu-Hwy\Honoapiilani Highway Widening\Dwg\Working Drawings\From MAA 3-17-08 (STRUCT FINAL)\S-12 TYPE-3 RETAINING WALL DETAILS.dwg LAST UPDATE: 04-14-2008 @ 04:34 pm PLOT DATE: 09-29-2008 @ 09:09 am

JONG NAMGUNG
LICENSED PROFESSIONAL ENGINEER
No. 3513-S
HAWAII, U.S.A.

THIS WORK WAS PREPARED BY ME OR UNDER MY SUPERVISION.

Jong Namgung

STATE OF HAWAII
DEPARTMENT OF TRANSPORTATION
HIGHWAYS DIVISION

TYPE-3 RETAINING WALL DETAILS

Honoapiilani Highway Widening
Lahainaluna Road to Aholo Road
Project No. STP-030-1(39)

Scale: AS SHOWN Date: October 2008

SHEET No. S-12 OF 42 SHEETS

FED. ROAD DIST. NO.	STATE	PROJ. NO.	FISCAL YEAR	SHEET NO.	TOTAL SHEETS
HAWAII	HAW.	STP-030-1(39)	2008	117	194

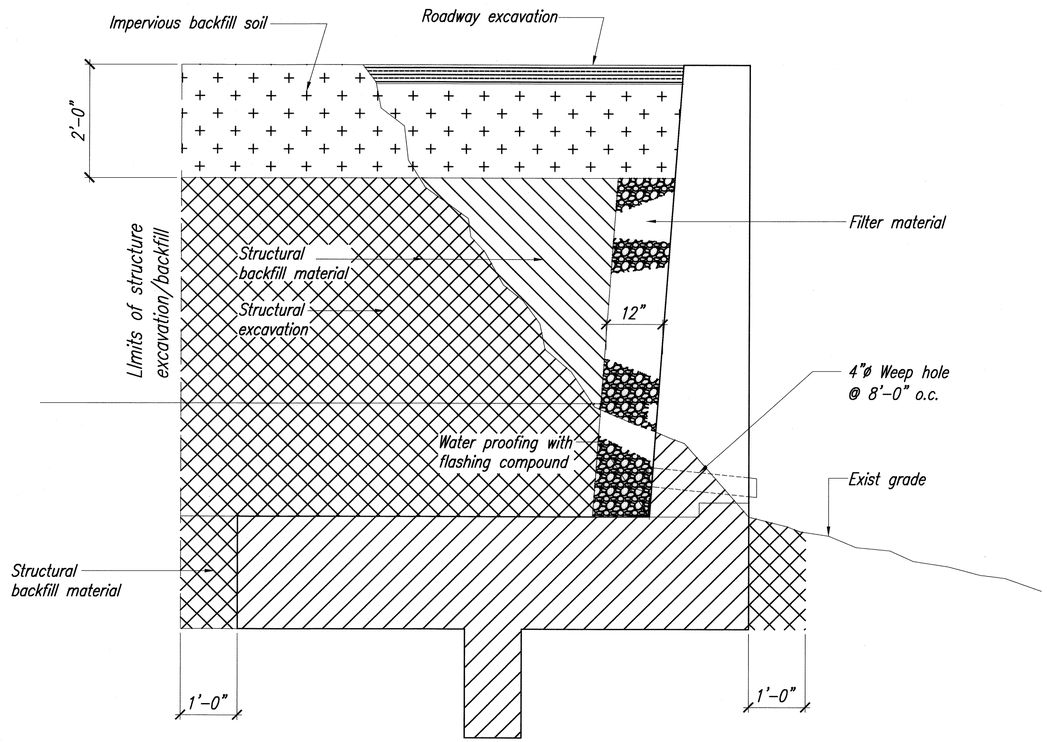

Legend

- Roadway excavation
- Structural backfill
- Structural excavation
- Filter material
- Impervious material

Impervious material

Impervious material as selected by the Engineer shall be made as impervious as possible by pneumatic tamping or other approved methods and shall be incidental to structure backfill.

Notes:

1. Structural backfill material conforming to Section 703.20 HSS with minimum of 95 percent relative compaction.
2. Filter material shall conform to Section 703.18 of HSS.
3. Impervious material shall be compacted to not less than 90 percent relative compaction.
4. See Standard plan B-01 for Flashing compound water proofing detail

TYPICAL RETAINING WALL EXCAVATION & BACKFILL PAY LIMITS FOR RETAINING WALL TYPE-1, TYPE-2 & TYPE-3

1

S-25 THRU S-42 | S-13

N.T.S.

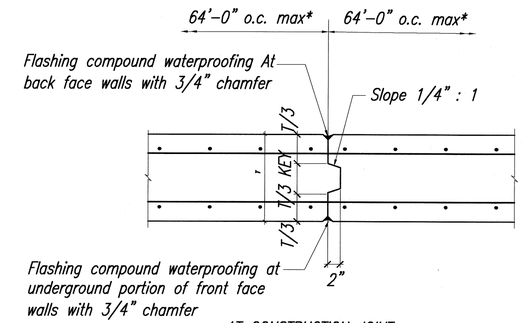

AT CONSTRUCTION JOINT

* Unless otherwise shown on plans

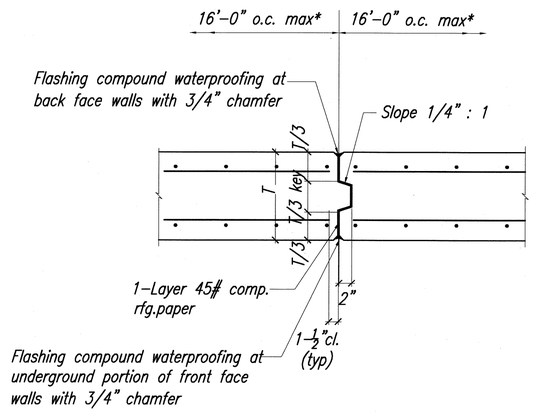

AT CONTROL JOINT

TYPICAL RETAINING WALL CONTROL/CONSTRUCTION JOINT DETAIL

1

S-25 THRU S-42 | S-13 Scale: 1" = 1'-0"

JONG NAMGUNG LICENSED PROFESSIONAL ENGINEER No. 3513-S HAWAII, U.S.A.

THIS WORK WAS PREPARED BY ME OR UNDER MY SUPERVISION.

Jong Namgung

STATE OF HAWAII
DEPARTMENT OF TRANSPORTATION
HIGHWAYS DIVISION

RETAINING WALL DETAILS

Honoapiilani Highway Widening
Lahainaluna Road to Aholo Road
Project No. STP-030-1(39)

Scale: AS SHOWN Date: October 2008

SHEET No. S-13 OF 42 SHEETS

ORIGINAL PLAN | SURVEY PLOTTED BY | DRAWN BY | TRACED BY | DESIGNED BY | QUANTITIES BY | CHECKED BY | DATE | NOTE BOOK No.

PATH/FILENAME: P:\Projects\Oahu-Hwy\Honoapiilani Highway Widening\Geo\Working Drawings\From MAA 3-17-08 (STRUCT FINAL)\S-13 RETAINING WALL DETAILS.dwg LAST UPDATE: 04-18-2008 @ 02:45 pm PLOT DATE: 09-29-2008 @ 09:09 am

FED. ROAD DIST. NO.	STATE	PROJ. NO.	FISCAL YEAR	SHEET NO.	TOTAL SHEETS
HAWAII	HAW.	STP-030-1(39)	2008	118	194

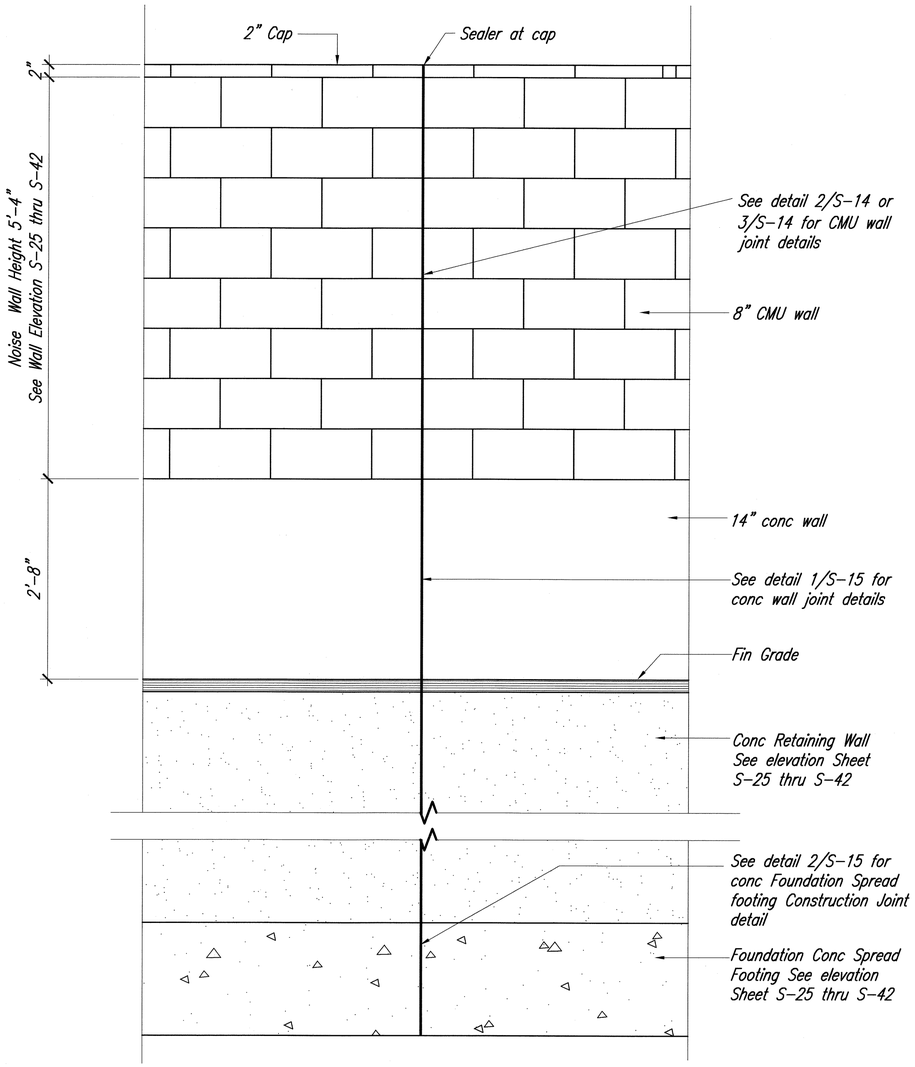

1 S-14 | S-14 CONC & CMU WALL JOINT ELEVATION DETAIL
Scale: 1" = 1'-0"

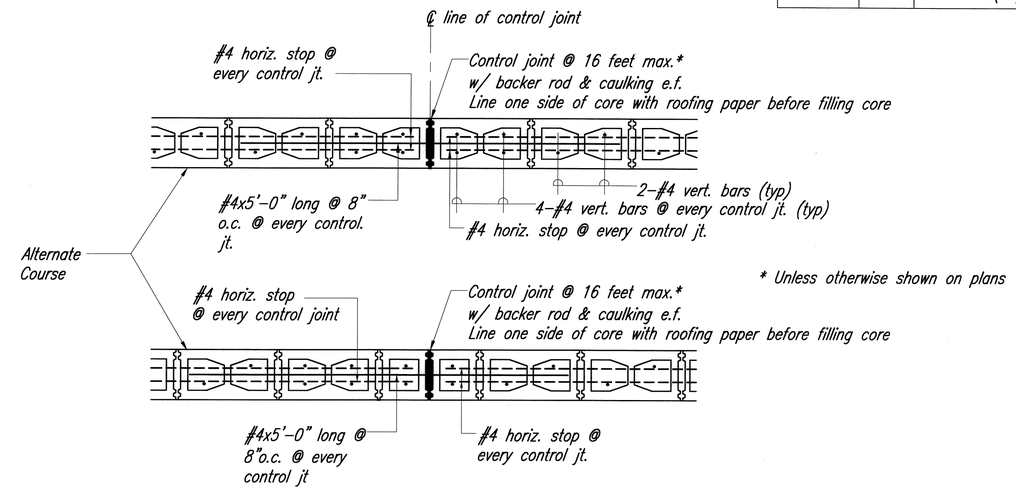

* Unless otherwise shown on plans

2 S-14 | S-14 CMU WALL CONTROL JOINT DETAIL
Scale: 1" = 1'-0"

ORIGINAL PLAN	SURVEY PLOTTED BY	DATE
	DRAWN BY	"
NOTE BOOK	TRACED BY	"
	DESIGNED BY	"
	QUANTITIES BY	"
No.	CHECKED BY	"

PATH/FILENAME: P:\Projects\Dot-hwy\Honoapiilani Highway Widening\dwg\Working Drawings\From MAA 3-17-08 (STRUCT FINAL)\S-14- NOISE BARRIER DETAIL-1.DWG LAST UPDATE: 46-18-2008 @ 02:46 pm PLOT DATE: 10-29-2008 @ 09:10 am

JONG NAMGUNG
LICENSED PROFESSIONAL ENGINEER
No. 3513-S
HAWAII, U.S.A.

THIS WORK WAS PREPARED BY ME OR UNDER MY SUPERVISION.

Jong Namgung

STATE OF HAWAII
DEPARTMENT OF TRANSPORTATION
HIGHWAYS DIVISION

NOISE BARRIER JOINT DETAILS

Honoapiilani Highway Widening
Lahainaluna Road to Aholo Road
Project No. STP-030-1(39)

Scale: AS SHOWN Date: October 2008

SHEET No. S-14 OF 42 SHEETS

FED. ROAD DIST. NO.	STATE	PROJ. NO.	FISCAL YEAR	SHEET NO.	TOTAL SHEETS
HAWAII	HAW.	STP-030-1(39)	2008	119	194

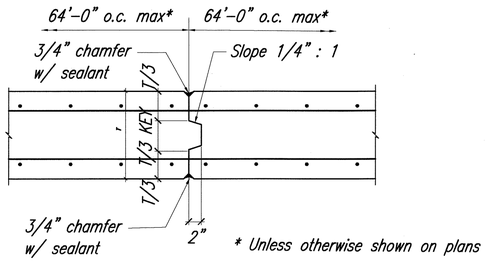

AT CONSTRUCTION JOINT

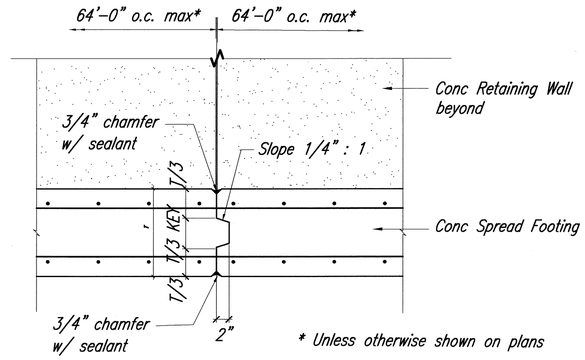

AT CONSTRUCTION JOINT

2
S-14 | S-15

FOUNDATION SPREAD FOOTING JOINT DETAIL

Scale: 1" = 1'-0"

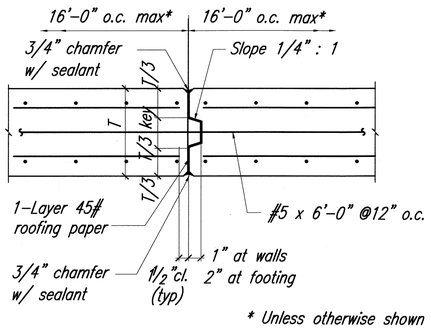

AT CONTROL JOINT

1
S-14 | S-15

CONCRETE WALL JOINT DETAILS (NON-RETAINING WALL CONDITION)

Scale: 1" = 1'-0"

ORIGINAL PLAN	SURVEY PLOTTED BY	DATE
	DRAWN BY	
NOTE BOOK	TRACED BY	
	DESIGNED BY	
	QUANTITIES BY	
No.	CHECKED BY	

PATH/FILENAME: P:\Projects\(Job-Hwy)\Honoapiilani Highway Widening\dwg\Working Drawings\From MAA 3-17-08 [STRUCT FINAL]\S-15- NOISE BARRIER DETAIL-2.DWG LAST UPDATE: 47-18-2008 @ 02:47 pm PLOT DATE: 10-29-2008 @ 09:10 am

JONG NAMGUNG
LICENSED PROFESSIONAL ENGINEER
No. 3513-S
HAWAII, U.S.A.

THIS WORK WAS PREPARED BY ME OR UNDER MY SUPERVISION.

STATE OF HAWAII
DEPARTMENT OF TRANSPORTATION
HIGHWAYS DIVISION

CONC WALL JOINT DETAILS

Honoapiilani Highway Widening
Lahainaluna Road to Aholo Road
Project No. STP-030-1(39)

Scale: AS SHOWN Date: October 2008

SHEET No. S-15 OF 42 SHEETS

FED. ROAD DIST. NO.	STATE	PROJ. NO.	FISCAL YEAR	SHEET NO.	TOTAL SHEETS
HAWAII	HAW.	STP-030-1(39)	2008	120	194

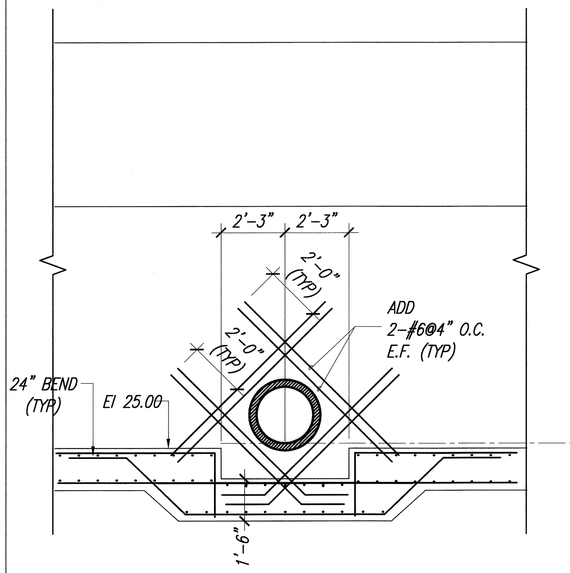

B S-16 | S-16 DRAINLINE A MAUKA RETAINING WALL FOOTING
Scale: 3/8" = 1'-0"

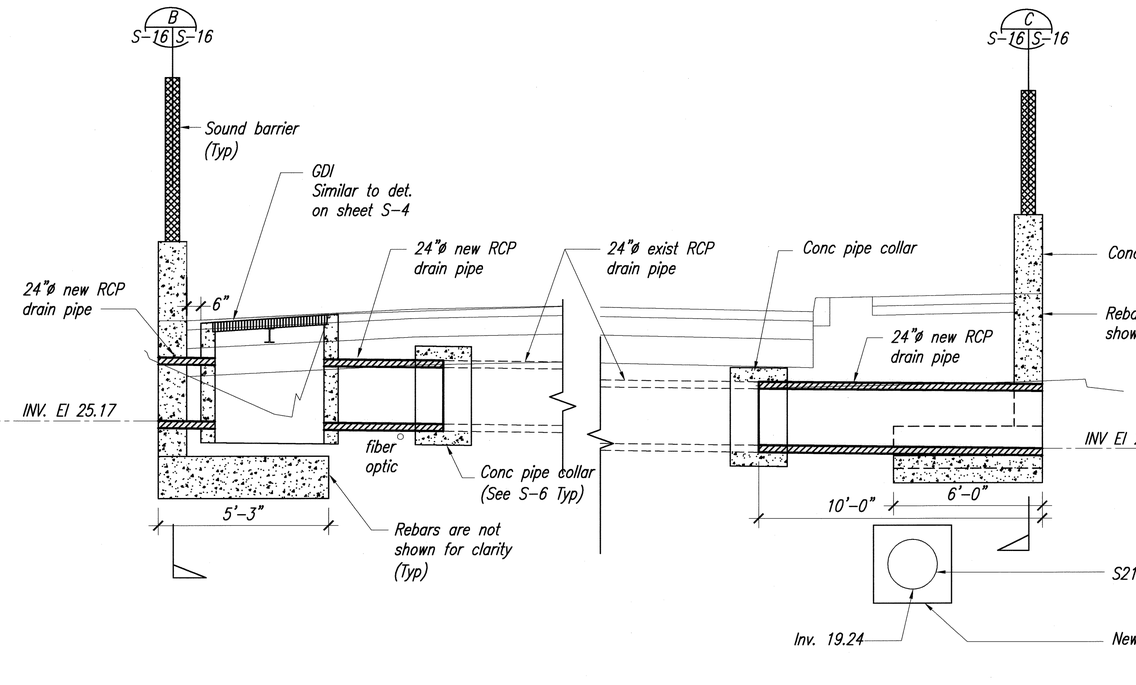

A S-7 | S-16 DRAINLINE A CROSS SECTION STATION 75+00.65
Scale: 3/8" = 1'-0"

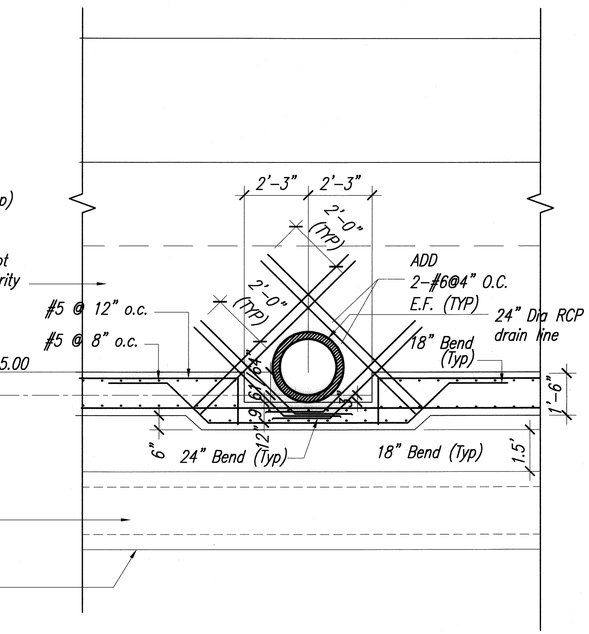

C S-16 | S-16 DRAINLINE A MAKAI RETAINING WALL FOOTING
Scale: 3/8" = 1'-0"

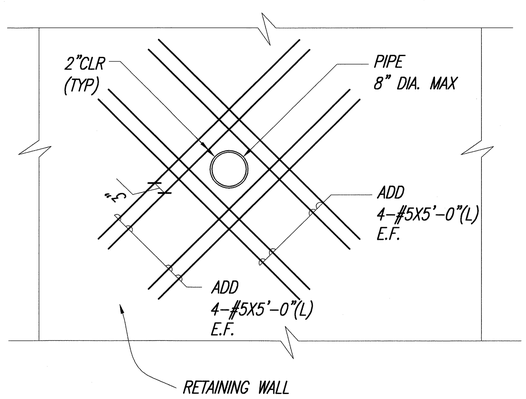

PIPE PENETRATION DETAIL AT CONC. RETAINING WALL
SC: 3/4" = 1'-0"

JONG NAMGUNG
LICENSED PROFESSIONAL ENGINEER
No. 3513-S
HAWAII, U.S.A.

THIS WORK WAS PREPARED BY ME OR UNDER MY SUPERVISION.

Jong Namgung

STATE OF HAWAII
DEPARTMENT OF TRANSPORTATION
HIGHWAYS DIVISION

RETAINING WALL
FOUNDATION DETAILS-1

Honoapiilani Highway Widening
Lahainaluna Road to Aholo Road
Project No. STP-030-1(39)

Scale: AS SHOWN Date: October 2008

SHEET No. S-16 OF 42 SHEETS

ORIGINAL PLAN	SURVEY PLOTTED BY	DATE
	DRAWN BY	"
NOTE BOOK	TRACED BY	"
	DESIGNED BY	"
	QUANTITIES BY	"
No.	CHECKED BY	"

PATH/FILENAME: P:\Projects\Con-Hwy\Honoapiilani Highway Widening\Dwg\Working Drawings\From MAX 3-17-08 (STRUCT TRAC)\S-16 retain wall found.dwg
LAST UPDATE: 10-14-2008 @ 10:58 pm
PLOT DATE: 11-29-2008 @ 09:11 am

FED. ROAD DIST. NO.	STATE	PROJ. NO.	FISCAL YEAR	SHEET NO.	TOTAL SHEETS
HAWAII	HAW.	STP-030-1(39)	2008	121	194

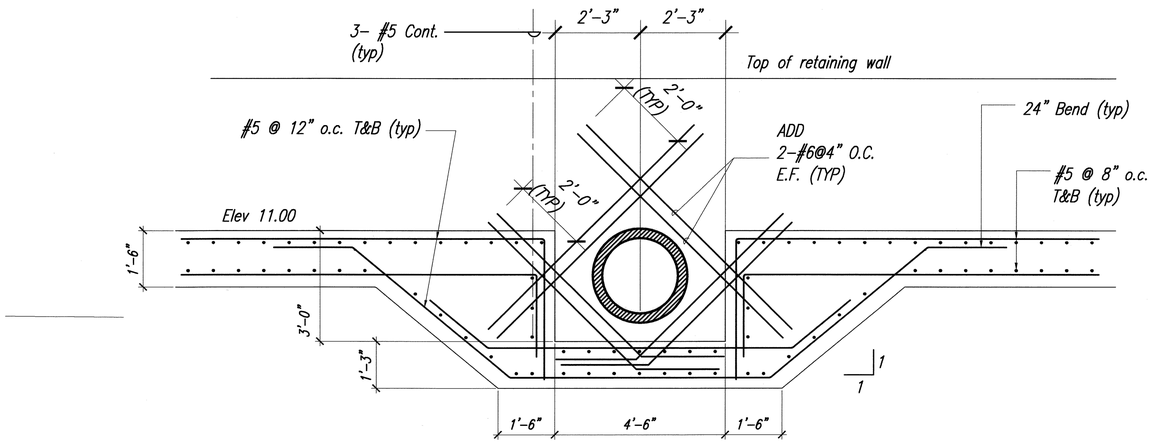

1 DRAINLINE B CROSS SECTION STA. 95+36.30

S-8, S-17 | S-31 Scale: ½" = 1'-0"

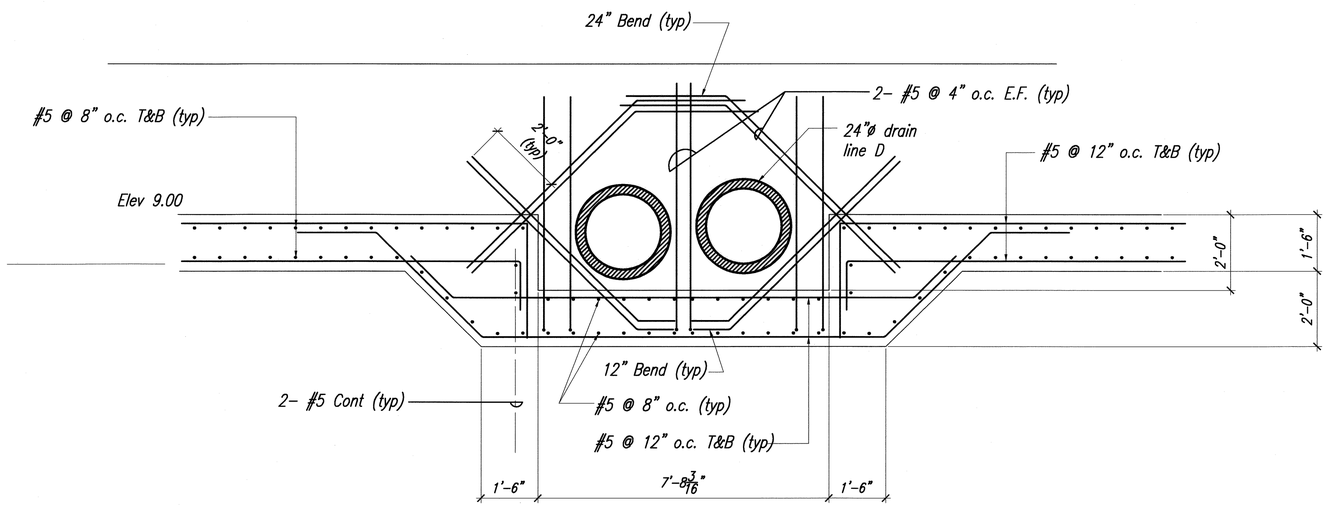

2 DRAINLINE C & D CROSS SECTION AT STA. 99+60.03 & STA. 99+63.26

S-9 | S-17 Scale: ½" = 1'-0"

ORIGINAL PLAN	SURVEY PLOTTED BY	DATE
	DRAWN BY	
NOTE BOOK	TRACED BY	
	DESIGNED BY	
	QUANTITIES BY	
No.	CHECKED BY	

PATH/FILENAME: F:\Projects\Oahu-Hwy\Honoapiilani Highway Widening\Working Drawings\From M&A 3-17-08 (STRUCT FINAL)\S-17 retain wall found.dwg LAST UPDATE: 08-14-2008 @ 03:58 pm PLOT DATE: 12-29-2008 @ 09:12 am

JONG NAMGUNG LICENSED PROFESSIONAL ENGINEER No. 3513-S HAWAII, U.S.A.

THIS WORK WAS PREPARED BY ME OR UNDER MY SUPERVISION.

Jong Namgung

STATE OF HAWAII
DEPARTMENT OF TRANSPORTATION
HIGHWAYS DIVISION

RETAINING WALL
FOUNDATION DETAILS-2

Honoapiilani Highway Widening
Lahainaluna Road to Aholo Road
Project No. STP-030-1(39)

Scale: AS SHOWN Date: October 2008

SHEET No. S-17 OF 42 SHEETS

FED. ROAD DIST. NO.	STATE	PROJ. NO.	FISCAL YEAR	SHEET NO.	TOTAL SHEETS
HAWAII	HAW.	STP-030-1(39)	2008	122	194

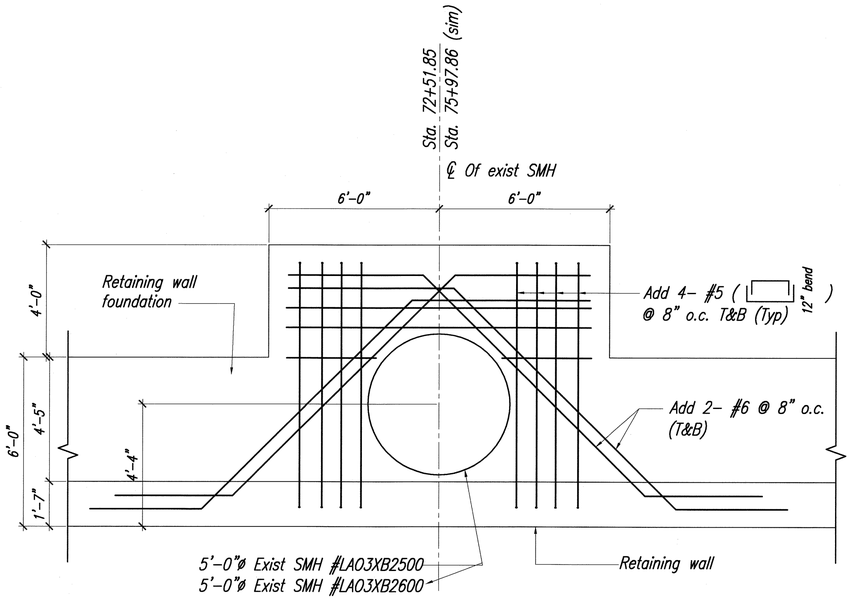

Note: Verify location & Dimension at exist SMH and adjust details accordingly.

1 S-25 | S-18 MAKAI SIDE RET. WALL FOUNDATION AT EXIST SMH AT STA. 72+51.85, STA. 75+97.86 (SIM)
Scale: 3/8" = 1'-0"

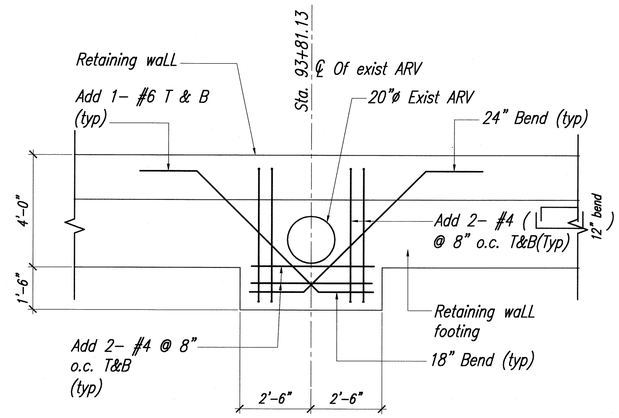

Note: Verify location & Dimension at exist SMH and adjust details accordingly.

2 S-41 | S-18 MAUKA SIDE RET. WALL FOUNDATION AT EXIST ARV AT STA. 93+81.13
Scale: 3/8" = 1'-0"

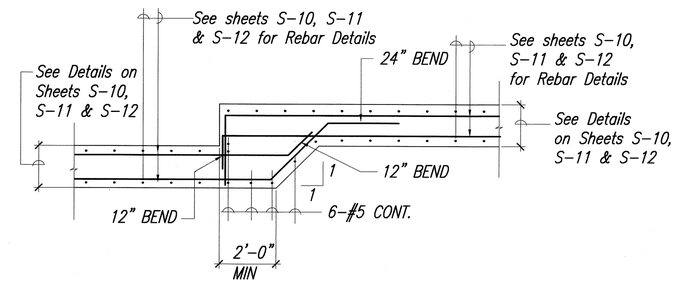

3 S-25 THRU S-42 | S-18 RETAINING WALL STEP FOUNDATION TYPICAL DETAIL
Scale: NTS

ORIGINAL PLAN | SURVEY PLOTTED BY ____ DATE ____
DRAWN BY ____ " ____
NOTE BOOK | TRACED BY ____ " ____
DESIGNED BY ____ " ____
QUANTITIES BY ____ " ____
No. ____ | CHECKED BY ____ " ____

PATH/FILENAME: P:\Projects\Old-Hwy\Honoapiilani Highway Widening\Design\Working Drawings\From AMA 3-17-08 (STRUCT FINAL)\S-18 retain wall found.dwg
LAST UPDATE: 09-14-2008 @ 03:59 pm
PLOT DATE: 12-29-2008 @ 09:12 am

JONG NAMGUNG
LICENSED PROFESSIONAL ENGINEER
No. 3513-S
HAWAII, U.S.A.

THIS WORK WAS PREPARED BY ME OR UNDER MY SUPERVISION.

Jong Namgung

STATE OF HAWAII
DEPARTMENT OF TRANSPORTATION
HIGHWAYS DIVISION

RETAINING WALL FOUNDATION DETAILS-3

Honoapiilani Highway Widening
Lahainaluna Road to Aholo Road
Project No. STP-030-1(39)

Scale: AS SHOWN Date: October 2008

SHEET No. S-18 OF 42 SHEETS

FED. ROAD DIST. NO.	STATE	PROJ. NO.	FISCAL YEAR	SHEET NO.	TOTAL SHEETS
HAWAII	HAW.	STP-030-1(39)	2008	123	194

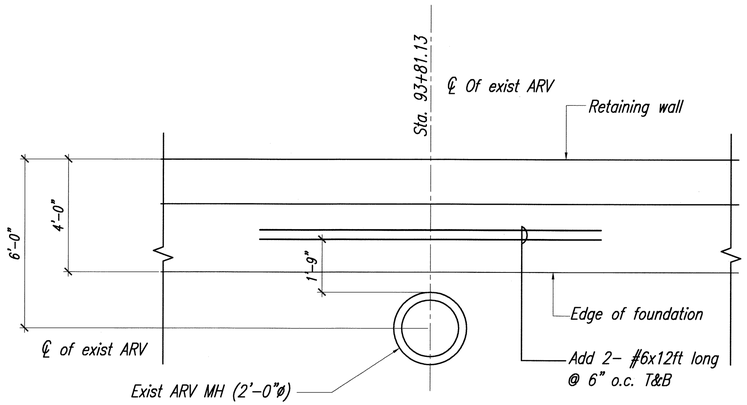

Note: Verify location at exist ARV and adjust details accordingly.

1 / S-40 | S-19 MAUKA SIDE RET. WALL FOUNDATION AT EXIST ARV AT STA. 120+94

Scale: 3/8" = 1'-0"

ORIGINAL PLAN	SURVEY PLOTTED BY	DATE
	DRAWN BY	"
NOTE BOOK	TRACED BY	"
	TYPESETTED BY	"
No.	QUANTITIES BY	"
	CHECKED BY	"

PATH/FILENAME: P:\Projects\Oahu-Hwy\Honoapiilani Highway Widening\Dwg\Working Drawings\From MAA 3-17-08 (STRUCT PANA)\S-19 retain wall found.dwg

LAST UPDATE: 10-14-2008 @ 04:35 pm

PLOT DATE: 12-29-2008 @ 09:13 am

JONG NAMGUNG
LICENSED PROFESSIONAL ENGINEER
No. 3513-S
HAWAII, U.S.A.

THIS WORK WAS PREPARED BY ME OR UNDER MY SUPERVISION.

Jong Namgung

STATE OF HAWAII
DEPARTMENT OF TRANSPORTATION
HIGHWAYS DIVISION

RETAINING WALL
FOUNDATION DETAILS-4

Honoapiilani Highway Widening
Lahainaluna Road to Aholo Road
Project No. STP-030-1(39)

Scale: AS SHOWN Date: October 2008

SHEET No. S-19 OF 42 SHEETS

FED. ROAD DIST. NO.	STATE	PROJ. NO.	FISCAL YEAR	SHEET NO.	TOTAL SHEETS
HAWAII	HAW.	STP-030-1(39)	2008	124	194

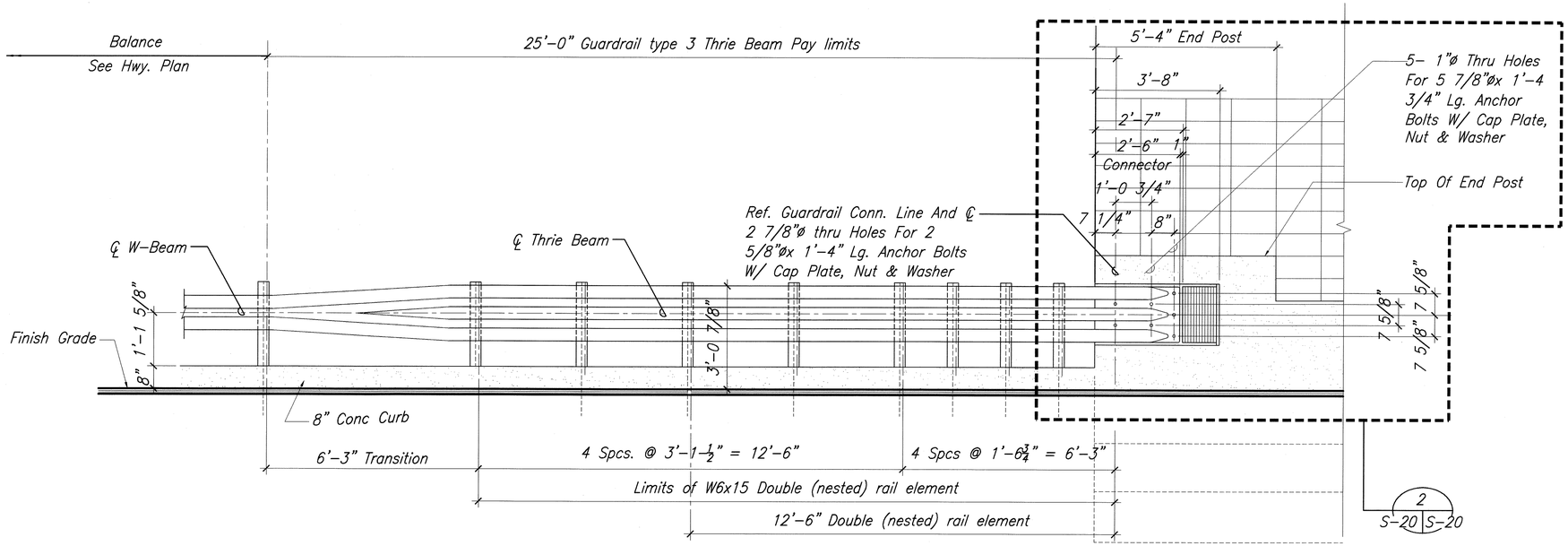

1 METAL GUARDRAIL / CONC. END WALL ELEVATION
S-20 S-20 SCALE: 1/2" = 1'-0"

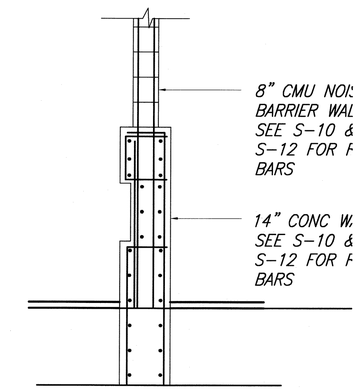

3 WALL SECTION
S-20 S-20 SCALE: 1/2" = 1'-0"

Note:

All fasteners, posts, blocks and rail elements shall conform to the latest edition and amendments of "A Guide to Standardized Highway Barrier Rail Hardware," a report prepared and approved by the AASHTO-AGCARTBA Joint Cooperative Committee.

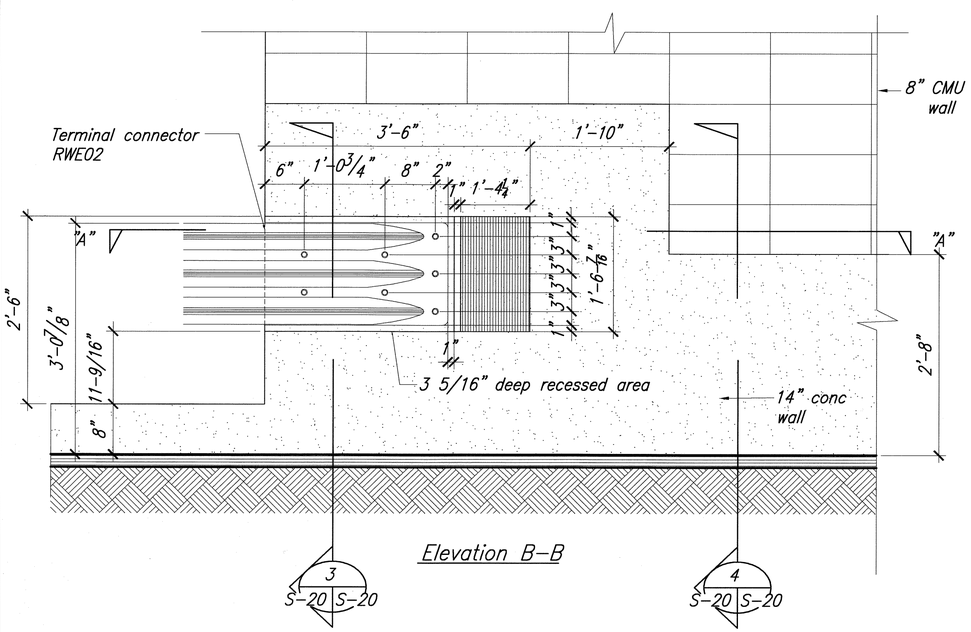

2 TRANSITION DETAIL - METAL GUARDRAIL / CONC. END WALL
S-20 S-20 SCALE: 1" = 1'-0"

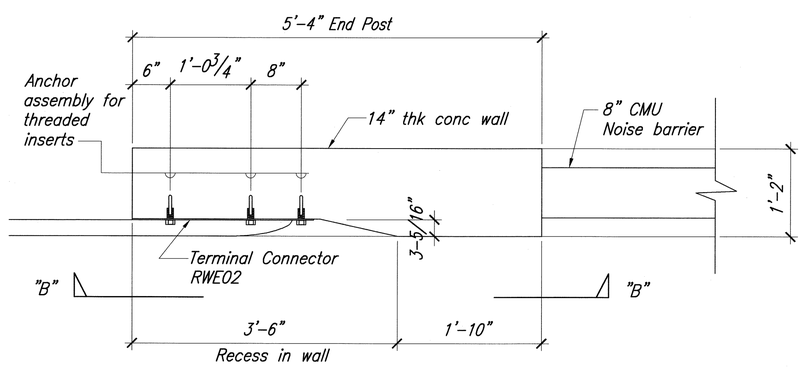

Plan Section "A"-"A"

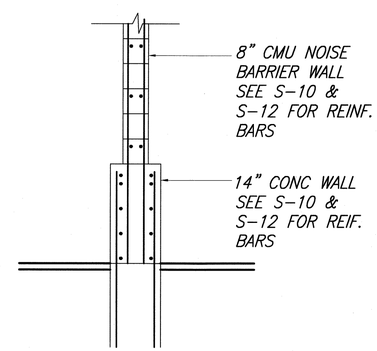

4 WALL SECTION
S-20 S-20 SCALE: 1/2" = 1'-0"

JONG NAMGUNG
LICENSED PROFESSIONAL ENGINEER
No. 3513-S
HAWAII, U.S.A.

THIS WORK WAS PREPARED BY ME OR UNDER MY SUPERVISION.

Jong Namgung

STATE OF HAWAII
DEPARTMENT OF TRANSPORTATION
HIGHWAYS DIVISION

TRANSITION DETAIL
METAL GUARDRAIL/CONC ENDWALL

Honoapiilani Highway Widening
Lahainaluna Road to Aholo Road
Project No. STP-030-1(39)

Scale: AS SHOWN Date: October 2008

SHEET No. S-20 OF 42 SHEETS

ORIGINAL PLAN | SURVEY PLOTTED BY | DRAWN BY | TRACED BY | DESIGNED BY | QUANTITIES BY | CHECKED BY | DATE | NOTE BOOK No.

PATH/FILENAME: F:\Projects\Oahu-Hwy\Honoapiilani Highway Widening\Dwg\Working Drawings\Form MBA 3-17-08 (STRUCT FINAL)\S-20 TRANSITION DETAIL.dwg

PLOT DATE: 14-29-2008 @ 09:14 am

LAST UPDATE: 01-14-2008 @ 04:01 pm

FED. ROAD DIST. NO.	STATE	PROJ. NO.	FISCAL YEAR	SHEET NO.	TOTAL SHEETS
HAWAII	HAW.	STP-030-1(39)	2008	125	194

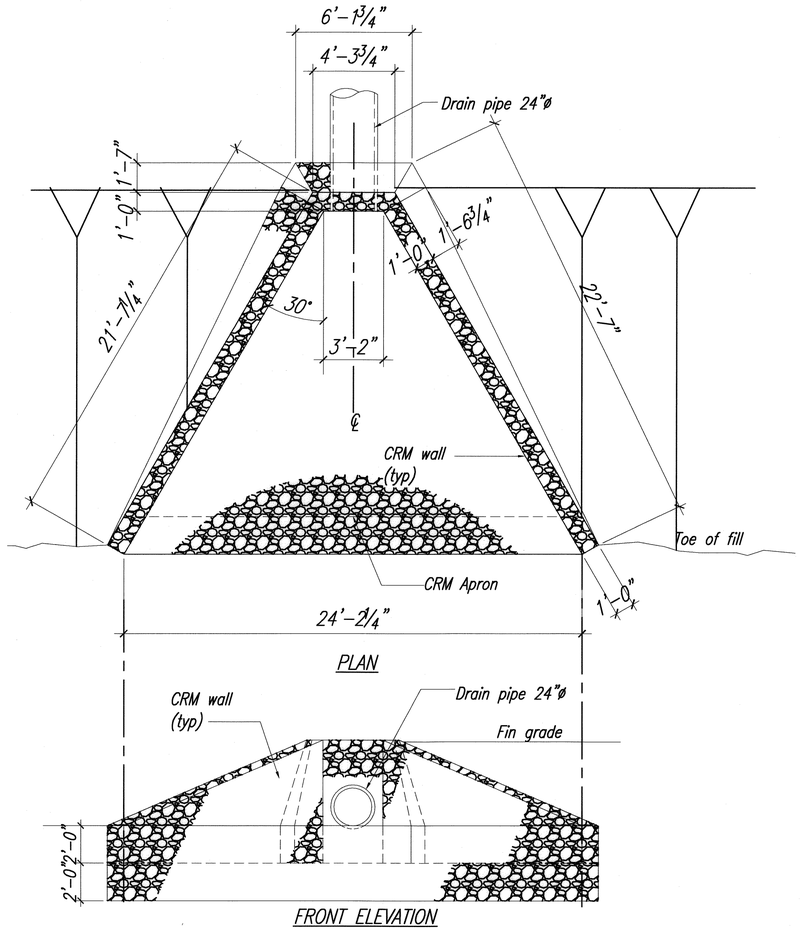

1 S-8 S-21 CRM DRAIN INLET STRUCTURE AT DRAINLINE "DL-B"
SCALE: 1/4' = 1'-0"

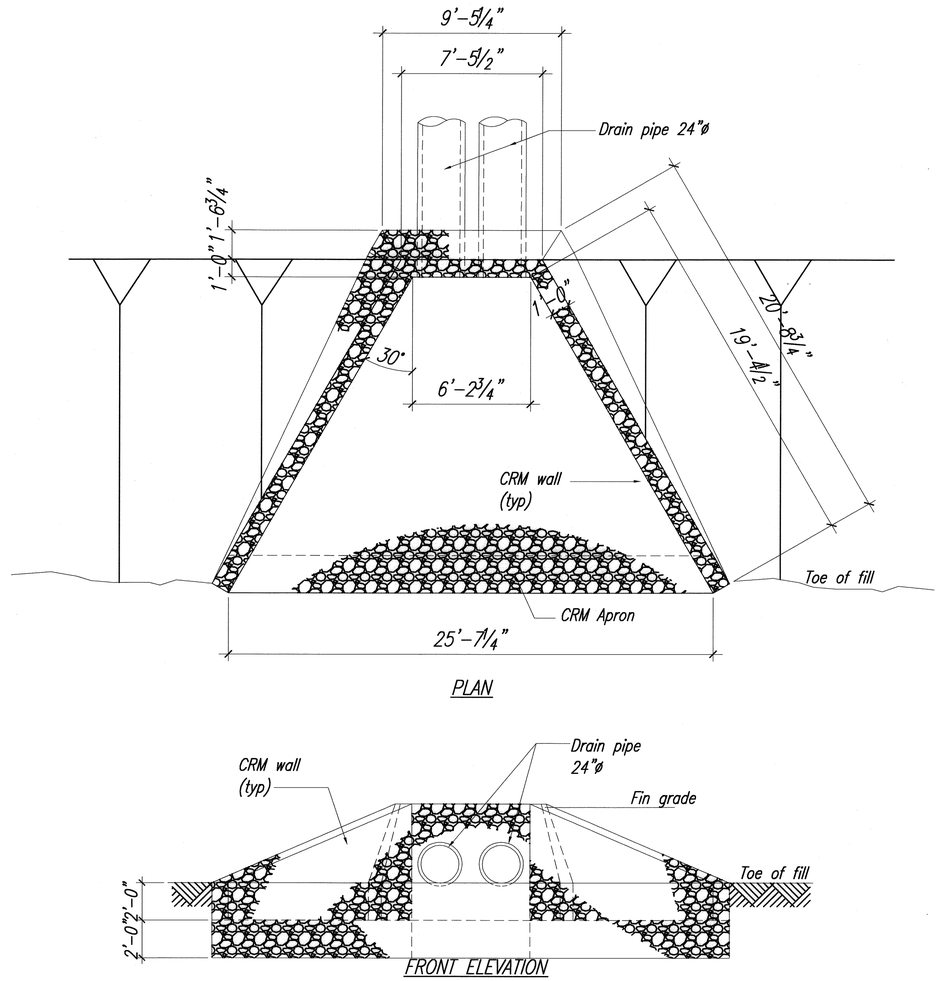

2 S-9 S-21 CRM DRAIN INLET STRUCTURE AT DRAINLINE "DL-C" & "DL-D"
SCALE: 1/4' = 1'-0"

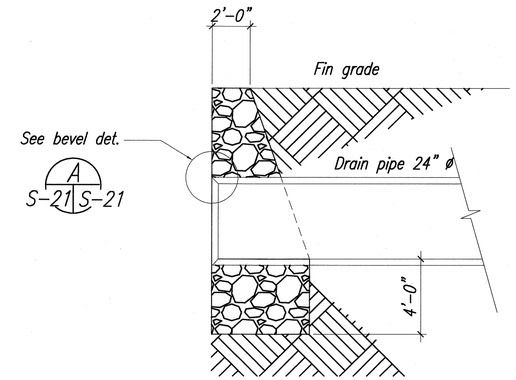

3 S-21 S-21 CRM HEAD WALL
SCALE: 1/4" = 1"-0"

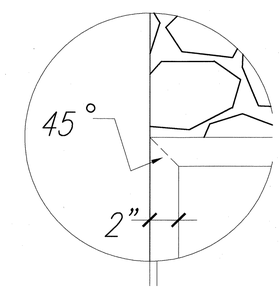

A S-21 S-21 BEVEL DETAIL
SCALE: 3/4" = 1'-0"

JONG NAMGUNG
LICENSED PROFESSIONAL ENGINEER
No. 3513-S
HAWAII, U.S.A.

THIS WORK WAS PREPARED BY ME OR UNDER MY SUPERVISION.

Jong Namgung

STATE OF HAWAII
DEPARTMENT OF TRANSPORTATION
HIGHWAYS DIVISION

CRM DRAIN INLET STRUCTURE

Honoapiilani Highway Widening
Lahainaluna Road to Aholo Road
Project No. STP-030-1(39)

Scale: AS SHOWN Date: October 2008

SHEET No. S-21 OF 42 SHEETS

ORIGINAL PLAN | SURVEY PLOTTED BY | DRAWN BY | TRACED BY | DESIGNED BY | QUANTITIES BY | CHECKED BY | DATE
NOTE BOOK No.

PATH/FILENAME: P:\Projects\Oai-Hwy\Honoapiilani Highway Widening\dwg\Working Drawings\From MAA 3-17-08 (STRUCT FINAL)\S-21-CRM DRAIN INLET STRUCTURE.DWG LAST UPDATE: 07-14-2008 @ 04:07 pm PLOT DATE: 16-29-2008 @ 09:18 am

FED. ROAD DIST. NO.	STATE	PROJ. NO.	FISCAL YEAR	SHEET NO.	TOTAL SHEETS
HAWAII	HAW.	STP-030-1(39)	2008	126	194

TYPE II TRAFFIC SIGNAL:

1. Design Specifications:
   - (A) Latest edition of the AASHTO Standard Specifications for Structural Supports for Highway Signs, Luminaries and Traffic Signals and its subsequent interims.
   - (B) Latest HDOT Memorandum with subject title "Design Criterial for Bridges and Structures."
2. Loads:
   - (A) Basic Wind Speed: 105 mph.
   - (B) Recurrence Interval of 50 years.
   - (C) Fatigue importance factor, IF, shall be based on Fatigue Category I for cantilevered traffic signal structures.
   - (D) Vortex shedding induced loads shall be considered for cantilevered mast arms and pole shafts that do not have tapers or have tapers of less than 0.14 in/ft.
   - (E) Traffic signal structures shall be designed for a truck induced gust based on a truck speed of 20 MPH over the posted speed.
   - (F) Galloping and natural wind gusts shall be considered for cantilevered traffic signal structures.
3. Materials:
   - (A) All concrete strengths shall be as noted below unless otherwise noted:

Item No.	Structural Parts	Classes of Concrete	Specified Compressive Strength f'c (28 Days)
(1)	Footing and Pedestal	–	4,500 psi

   See specifications for drilled shaft concrete.
   All concrete with a 28 day compressive strength of 4,000 psi or greater shall have a maximum W/C ratio of 0.45.
   - (B) All connection bolts shall be AASHTO M164 bolts and anchor bolts shall be AASHTO M314-105 bolt.
   - (C) Aluminum members and surfaces in contact with structural steel shall be isolated with neoprene material as approved by the Engineer.
4. General:
   - (A) See General Notes on B-01, TE-32, TE-33A.1, and TE-33A.2 for additional information.
   - (B) The recommendations of the traffic pole manufacturer shall be followed. Manufacturer shall select pole, anchor bolts, etc. based on criteria given in the contract documents. The Contractor shall submit catalog cuts and calculations to the Engineer for approval.
   - (C) Alternate designs in accordance with the plans and specifications shall use the Service Load Design Method and shall be stamped by a registered structural engineer of the State of Hawaii and submitted to the Engineer for approval.
   - (D) The Contractor shall use templates while installing the anchor bolts. Anchor bolts shall be vertical.
   - (E) Excavation and backfill shall be considered incidental to the cost of the traffic signal foundation.

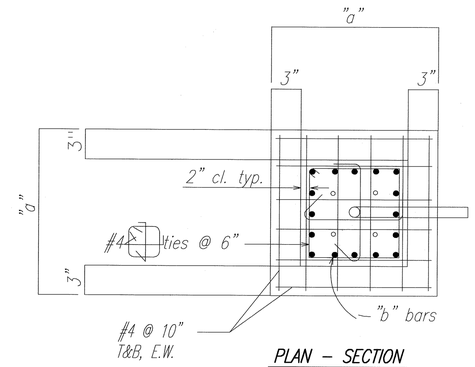

PLAN – SECTION

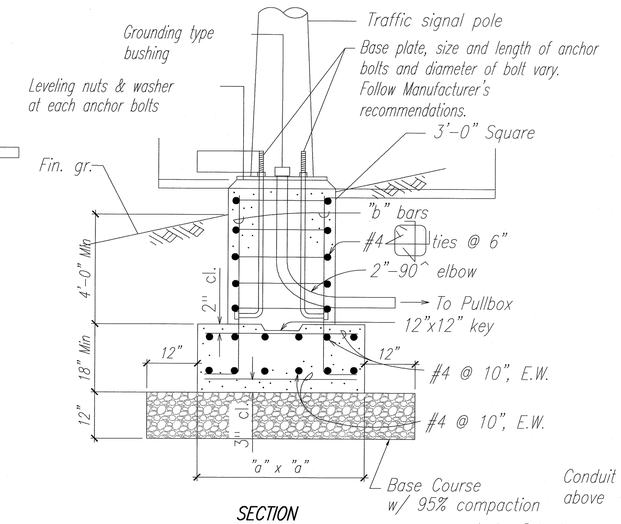

SECTION

SPREAD FOOTING FOR TYPE II MAST ARM STANDARD

SOIL TYPE	MAST ARM LENGTH	"a"	"b" BARS
Stiff Clays	16' – 18'	3'-6"	16-#5
	20'	3'-6"	16-#5
	25'	3'-6"	16-#5
	30'	4'-0"	16-#6
	35'	4'-3"	16-#6
	40'	4'-6"	16-#6
Sand & Gravel	16' – 18'	3'-6"	16-#5
	20'	3'-6"	16-#5
	25'	3'-6"	16-#5
	30'	3'-6"	16-#6
	35'	3'-9"	16-#6
	40'	4'-0"	16-#6
Rock	16' – 18'	3'-6"	16-#5
	20'	3'-6"	16-#5
	25'	3'-6"	16-#5
	30'	3'-6"	16-#6
	35'	3'-9"	16-#6
	40'	4'-0"	16-#6

TYPE II SPREAD FOOTING SCHEDULE

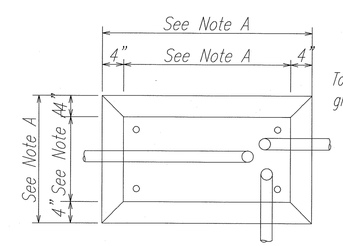

PLAN

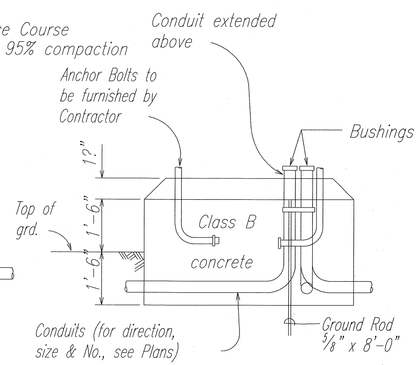

ELEVATION

CONCRETE BASE FOR CONTROLLER CABINET

NOTES:

A. Dimensions to be determined by the size of the Controller Cabinet to be furnished under this Contract.

B. Details of Conduits, Anchor Bolts, etc., are approximate only. Manufacturer's recommendations shall be followed. Contractor shall submit catalog cuts to the Engineer for approval.

JONG NAMGUNG
LICENSED PROFESSIONAL ENGINEER
No. 3513-S
HAWAII, U.S.A.

THIS WORK WAS PREPARED BY ME OR UNDER MY SUPERVISION.

Jong Namgung

STATE OF HAWAII
DEPARTMENT OF TRANSPORTATION
HIGHWAYS DIVISION

TRAFFIC SIGNAL POLE FOUNDATION DETAIL-(1)

Honoapiilani Highway Widening
Lahainaluna Road to Aholo Road
Project No. STP-030-1(39)

Scale: AS SHOWN Date: October 2008

SHEET No. S-22 OF 42 SHEETS

ORIGINAL PLAN | SURVEY PLOTTED BY | DRAWN BY | TRACED BY | DESIGNED BY | QUANTITIES BY | CHECKED BY | DATE | NOTE BOOK No.

PATH/FILENAME: P:\Projects\Oahu-Hwy\Honoapiilani Highway Widening\Dwg\Working Drawings\From MAA 3-17-08 (STRUCT FINAL)\S-22-TRAFFIC SIGNAL POLE FOUNDATION DETAIL.dgn PLOT DATE: 10-14-2008 @ 04:13 pm PLOT DATE: 10-29-2008 @ 09:19 am

FED. ROAD DIST. NO.	STATE	PROJ. NO.	FISCAL YEAR	SHEET NO.	TOTAL SHEETS
HAWAII	HAW.	STP-030-1(39)	2008	127	194

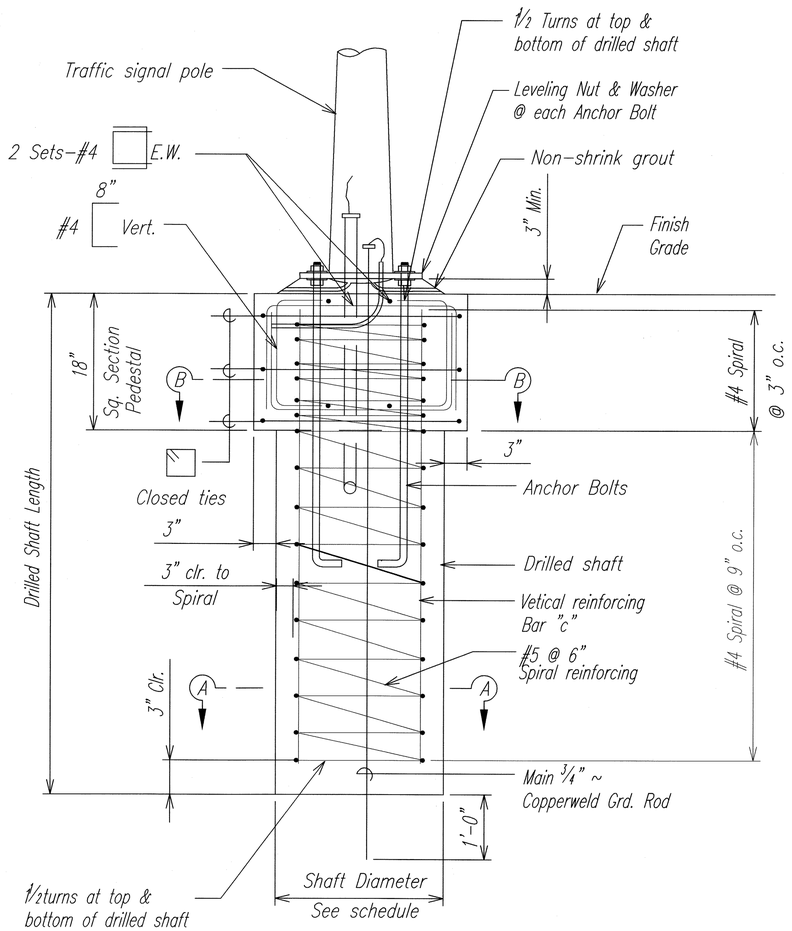

ELEVATION

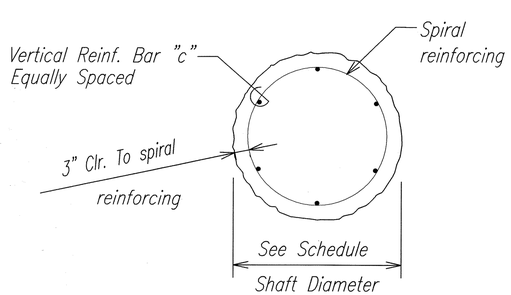

SECTION A-A

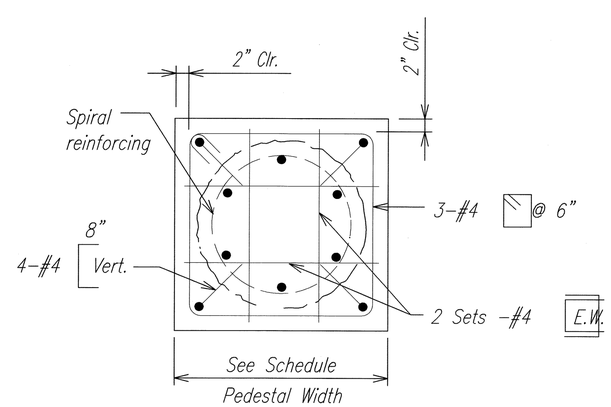

SECTION B-B

Note:
1. Traffic signal poles manufacturer's recommendations shall be followed.
2. See schedules on TE-33A.2 for additional details.

DRILLED SHAFT FOUNDATION FOR TYPE II MAST ARM STANDARD

Not to Scale

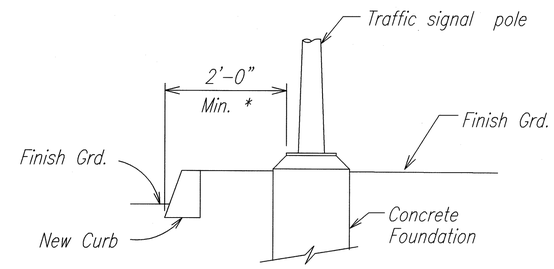

* - If 2'-0" min. can not be maintained due to conflict with other utilities, coordinate field adjustments with Engineer.

HIGHWAY LIGHTING DETAIL

Not to Scale

JONG NAMGUNG
LICENSED PROFESSIONAL ENGINEER
No. 3513-S
HAWAII, U.S.A.

THIS WORK WAS PREPARED BY ME OR UNDER MY SUPERVISION.

Jong Namgung

STATE OF HAWAII
DEPARTMENT OF TRANSPORTATION
HIGHWAYS DIVISION

TRAFFIC SIGNAL POLE FOUNDATION DETAIL - (2)

Honoapiilani Highway Widening
Lahainaluna Road to Aholo Road
Project No. STP-030-1(39)

Scale: AS SHOWN Date: October 2008

SHEET No. S-23 OF 42 SHEETS

ORIGINAL PLAN	SURVEY PLOTTED BY	DATE
	DRAWN BY	
	TRACED BY	
NOTE BOOK	DESIGNED BY	
	QUANTITIES BY	
No.	CHECKED BY	

PATH/FILENAME: P:\Projects\Oahu-hwy\Honoapiilani Highway Widening\dwg\Working Drawings\From MAA 3-17-08 [STRUCT FINAL]\S-23-TRAFFIC SIGNAL POLE FOUNDATION DETAIL.dgn PLOT DATE: 24-29-2008 @ 09:24 am

FED. ROAD DIST. NO.	STATE	PROJ. NO.	FISCAL YEAR	SHEET NO.	TOTAL SHEETS
HAWAII	HAW.	STP-030-1(39)	2008	128	194

LEVEL GROUND CONDITION – BELOW GROUND WATER TABLE

SOIL TYPE	MAST ARM LENGTH	Shaft Diameter	Shaft Length	Pedestal Width	BARS "c"
Stiff Clays	16' – 18'	24"	6'-0"	30"	12-#6
	20'	24"	6'-0"	30"	12-#6
	25'	30"	6'-0"	36"	16-#6
	30'	30"	7'-0"	36"	16-#6
	35'	30"	8'-0"	36"	16-#6
	40'	30"	11'-0"	36"	16-#6
Sand & Gravel	16' – 18'	24"	9'-0"	30"	12-#6
	20'	24"	10'-0"	30"	12-#6
	25'	30"	9'-0"	36"	16-#6
	30'	30"	11'-0"	36"	16-#6
	35'	30"	13'-0"	36"	16-#6
	40'	30"	15'-0"	36"	16-#6
Rock	16' – 18'	24"	4'-0"	30"	12-#6
	20'	24"	4'-0"	30"	12-#6
	25'	30"	4'-0"	36"	16-#6
	30'	30"	4'-0"	36"	16-#6
	35'	30"	4'-0"	36"	16-#6
	40'	30"	4'-0"	36"	16-#6

2H : 1V SLOPING GROUND CONDITION – BELOW GROUND WATER TABLE

SOIL TYPE	MAST ARM LENGTH	Shaft Diameter	Shaft Length	Pedestal Width	BARS "c"
Stiff Clays	16' – 18'	24"	7'-0"	30"	12-#6
	20'	24"	7'-0"	30"	12-#6
	25'	30"	7'-0"	36"	16-#6
	30'	30"	8'-0"	36"	16-#6
	35'	30"	8'-0"	36"	16-#6
	40'	30"	11'-0"	36"	16-#6
Sand & Gravel	16' – 18'	24"	10'-0"	30"	12-#6
	20'	24"	10'-0"	30"	12-#6
	25'	30"	10'-0"	36"	16-#6
	30'	30"	11'-0"	36"	16-#6
	35'	30"	13'-0"	36"	16-#6
	40'	30"	15'-0"	36"	16-#6
Rock	16' – 18'	24"	4'-0"	30"	12-#6
	20'	24"	4'-0"	30"	12-#6
	25'	30"	4'-0"	36"	16-#6
	30'	30"	4'-0"	36"	16-#6
	35'	30"	4'-0"	36"	16-#6
	40'	30"	5'-0"	36"	16-#6

LEVEL GROUND CONDITION – ABOVE GROUND WATER TABLE

SOIL TYPE	MAST ARM LENGTH	Shaft Diameter	Shaft Length	Pedestal Width	BARS "c"
Stiff Clays	16' – 18'	24"	6'-0"	30"	12-#6
	20'	24"	6'-0"	30"	12-#6
	25'	30"	6'-0"	36"	16-#6
	30'	30"	7'-0"	36"	16-#6
	35'	30"	8'-0"	36"	16-#6
	40'	30"	11'-0"	36"	16-#6
Sand & Gravel	16' – 18'	24"	6'-0"	30"	12-#6
	20'	24"	7'-0"	30"	12-#6
	25'	30"	7'-0"	36"	16-#6
	30'	30"	8'-0"	36"	16-#6
	35'	30"	9'-0"	36"	16-#6
	40'	30"	10'-0"	36"	16-#6
Rock	16' – 18'	24"	4'-0"	30"	12-#6
	20'	24"	4'-0"	30"	12-#6
	25'	30"	4'-0"	36"	16-#6
	30'	30"	4'-0"	36"	16-#6
	35'	30"	4'-0"	36"	16-#6
	40'	30"	4'-0"	36"	16-#6

2H : 1V SLOPING GROUND CONDITION – ABOVE GROUND WATER TABLE

SOIL TYPE	MAST ARM LENGTH	Shaft Diameter	Shaft Length	Pedestal Width	BARS "c"
Stiff Clays	16' – 18'	24"	7'-0"	30"	12-#6
	20'	24"	7'-0"	30"	12-#6
	25'	30"	7'-0"	36"	16-#6
	30'	30"	8'-0"	36"	16-#6
	35'	30"	8'-0"	36"	16-#6
	40'	30"	11'-0"	36"	16-#6
Sand & Gravel	16' – 18'	24"	8'-0"	30"	12-#6
	20'	24"	8'-0"	30"	12-#6
	25'	30"	8'-0"	36"	16-#6
	30'	30"	8'-0"	36"	16-#6
	35'	30"	9'-0"	36"	16-#6
	40'	30"	10'-0"	36"	16-#6
Rock	16' – 18'	24"	4'-0"	30"	12-#6
	20'	24"	4'-0"	30"	12-#6
	25'	30"	4'-0"	36"	16-#6
	30'	30"	4'-0"	36"	16-#6
	35'	30"	4'-0"	36"	16-#6
	40'	30"	4'-0"	36"	16-#6

JONG NAMGUNG
LICENSED PROFESSIONAL ENGINEER
No. 3513-S
HAWAII, U.S.A.

THIS WORK WAS PREPARED BY ME OR UNDER MY SUPERVISION.

Jong Namgung

STATE OF HAWAII
DEPARTMENT OF TRANSPORTATION
HIGHWAYS DIVISION

TRAFFIC SIGNAL POLE FOUNDATION DETAIL – (3)

Honoapiilani Highway Widening
Lahainaluna Road to Aholo Road
Project No. STP-030-1(39)

Scale: AS SHOWN Date: October 2008

SHEET No. S-24 OF 42 SHEETS

ORIGINAL PLAN | SURVEY PLOTTED BY | DRAWN BY | NOTE BOOK | TRACED BY | DESIGNED BY | QUANTITIES BY | CHECKED BY | No. | DATE

PATH/FILENAME: P:\Projects\Oahu-Hwy\Honoapiilani Highway Widening\dwg\Working Drawings\From MBA 3-17-08 (STRUCT FINAL)\S-24-TRAFFIC SIGNAL POLE FOUNDATION DETAIL.dgn PLOT DATE: 10-14-2008 @ 04:17 pm PLOT DATE: 10-29-2008 @ 09:26 am

FED. ROAD DIST. NO.	STATE	PROJ. NO.	FISCAL YEAR	SHEET NO.	TOTAL SHEETS
HAWAII	HAW.	STP-030-1(39)	2008	129	194

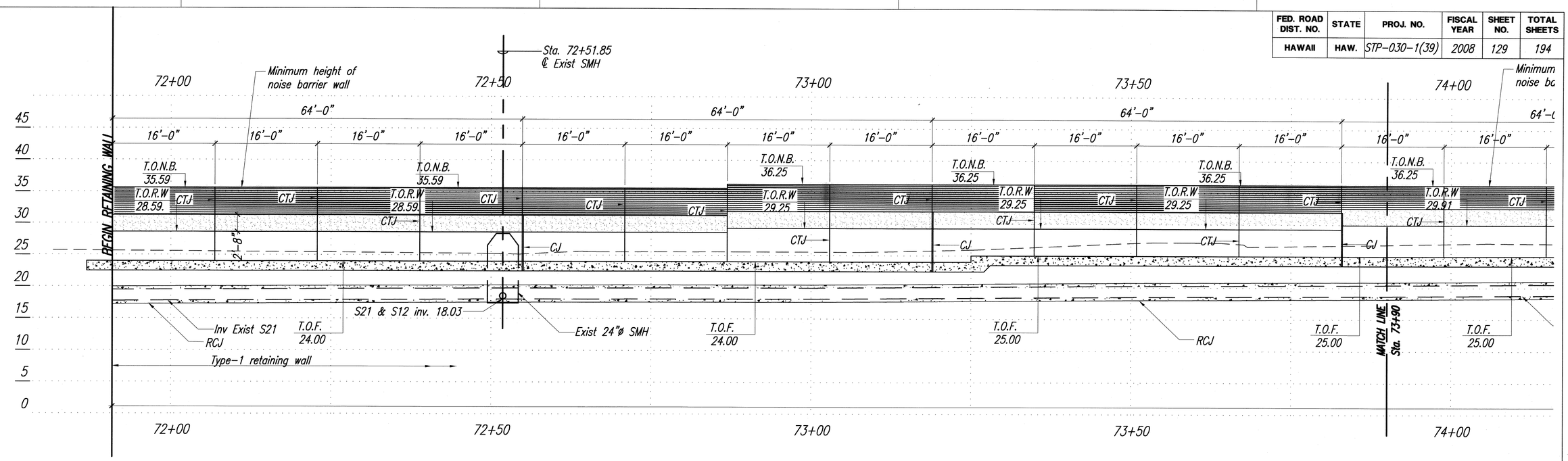

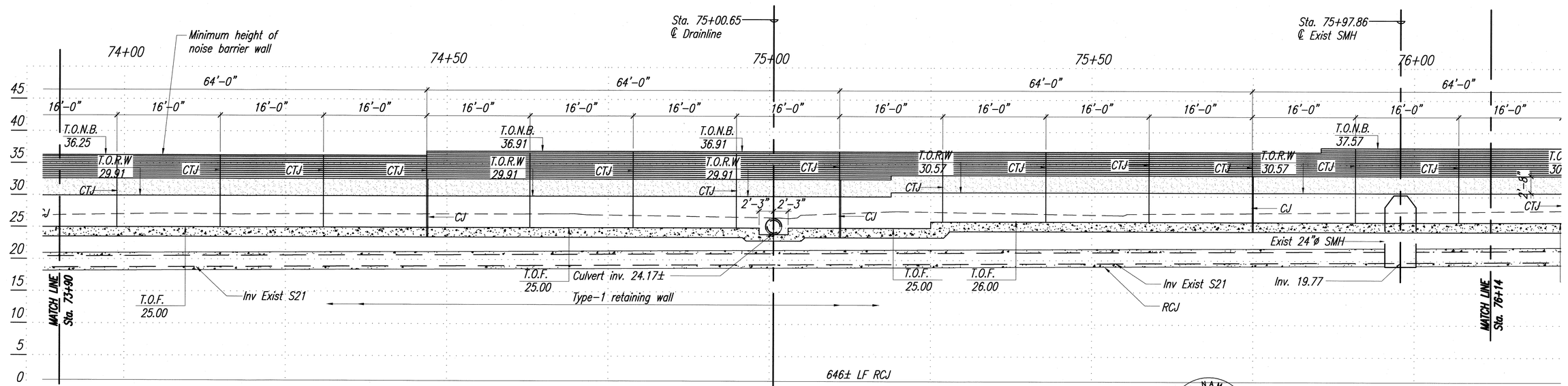

PARTIAL MAKAI RETAINING WALL ELEVATION

SCALE: 1/8" = 1'-0"

NOTE:
1. Foundation Details S-16 to S-19.

LEGEND

T.O.N.B	Denotes top of noise barrier
T.O.R.W	Denotes top of retaining wall
T.O.F	Denotes top of footing
C.J	Denotes construction joint
C.T.J	Denotes control joint

JONG NAMGUNG
LICENSED PROFESSIONAL ENGINEER
No. 3513-S
HAWAII, U.S.A.

THIS WORK WAS PREPARED BY ME OR UNDER MY SUPERVISION.

STATE OF HAWAII
DEPARTMENT OF TRANSPORTATION
HIGHWAYS DIVISION

PARTIAL MAKAI RETAINING WALL ELEVATION – (1)

Honoapiilani Highway Widening
Lahainaluna Road to Aholo Road
Project No. STP-030-1(39)

Scale: AS SHOWN Date: October 2008

SHEET No. S-25 OF 42 SHEETS

ORIGINAL PLAN | SURVEY PLOTTED BY | DRAWN BY | TRACED BY | DESIGNED BY | QUANTITIES BY | CHECKED BY | DATE | NOTE BOOK No.

PLOT DATE: 26-25-2008 @ 09:28 am
LAST UPDATE: 12-22-2008 @ 02:32 pm
PATH/FILENAME: P:\Projects\04-hwy\Honoapiilani Highway Widening\dwg\Working Drawings\From MAA 3-17-08 (STRUCT FINAL)\S-25-S-38-RETAINING MAKAI WALL.DWG

FED. ROAD DIST. NO.	STATE	PROJ. NO.	FISCAL YEAR	SHEET NO.	TOTAL SHEETS
HAWAII	HAW.	STP-030-1(39)	2008	130	194

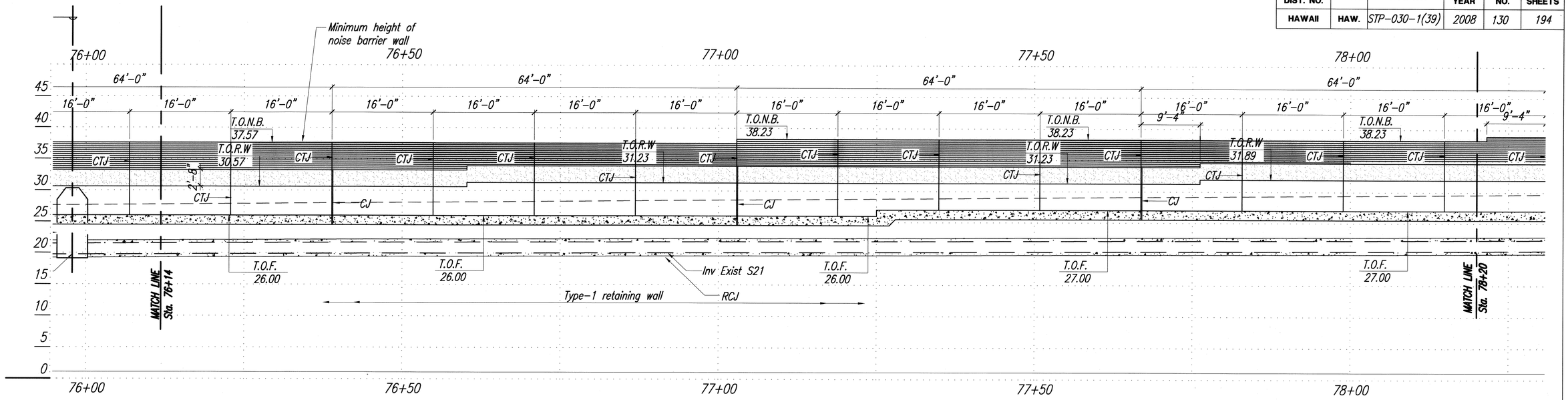

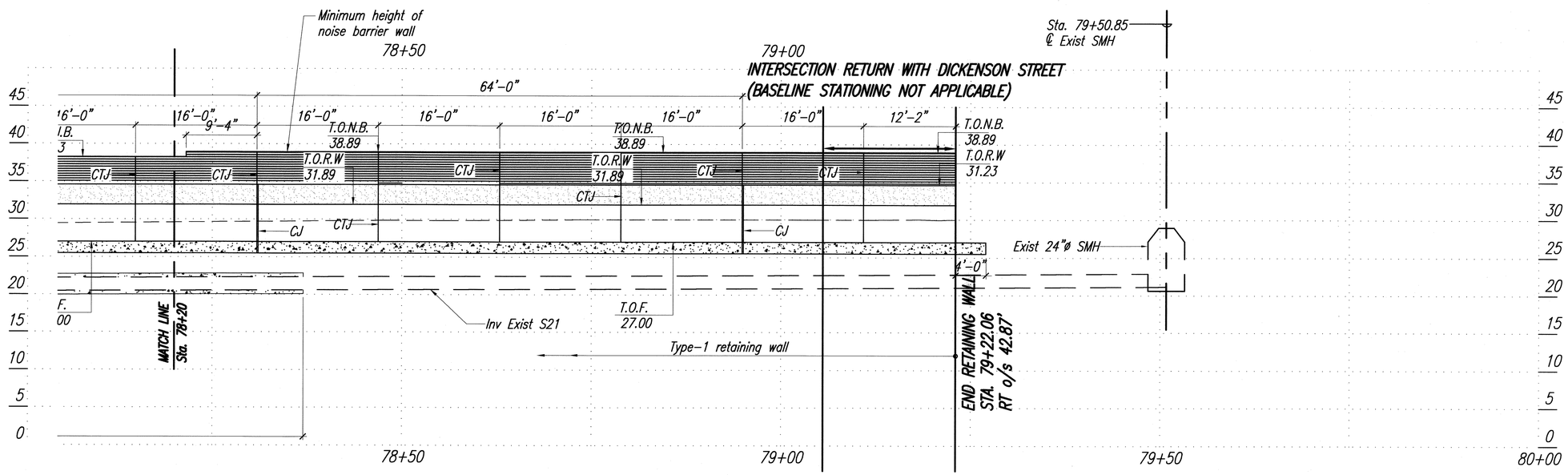

PARTIAL MAKAI RETAINING WALL ELEVATION

SCALE: 1/8" = 1'-0"

NOTE:

1. Foundation Details S-16 to S-19.

JONG NAMGUNG
LICENSED PROFESSIONAL ENGINEER
No. 3513-S
HAWAII, U.S.A.

THIS WORK WAS PREPARED BY ME OR UNDER MY SUPERVISION.

Jong Namgung

STATE OF HAWAII
DEPARTMENT OF TRANSPORTATION
HIGHWAYS DIVISION

PARTIAL MAKAI RETAINING WALL ELEVATION-(2)

Honoapiilani Highway Widening
Lahainaluna Road to Aholo Road
Project No. STP-030-1(39)

Scale: AS SHOWN Date: October 2008

SHEET No. S-26 OF 42 SHEETS

ORIGINAL PLAN | SURVEY PLOTTED BY | DRAWN BY | TRACED BY | DESIGNED BY | QUANTITIES BY | CHECKED BY | DATE | NOTE BOOK No.

PATH/FILENAME: P:\Projects\Job-Hwy\Honoapiion Highway Widening\dwg\Working Drawings\From MAA 3-17-08 (STRUCT FINAL)\S-25-S-38-RETAINING MAKAI WALLING LAST UPDATE: 32-22-2008 @ 02:32 pm PLOT DATE: 28-29-2008 @ 09:28 am

FED. ROAD DIST. NO.	STATE	PROJ. NO.	FISCAL YEAR	SHEET NO.	TOTAL SHEETS
HAWAII	HAW.	STP-030-1(39)	2008	131	194

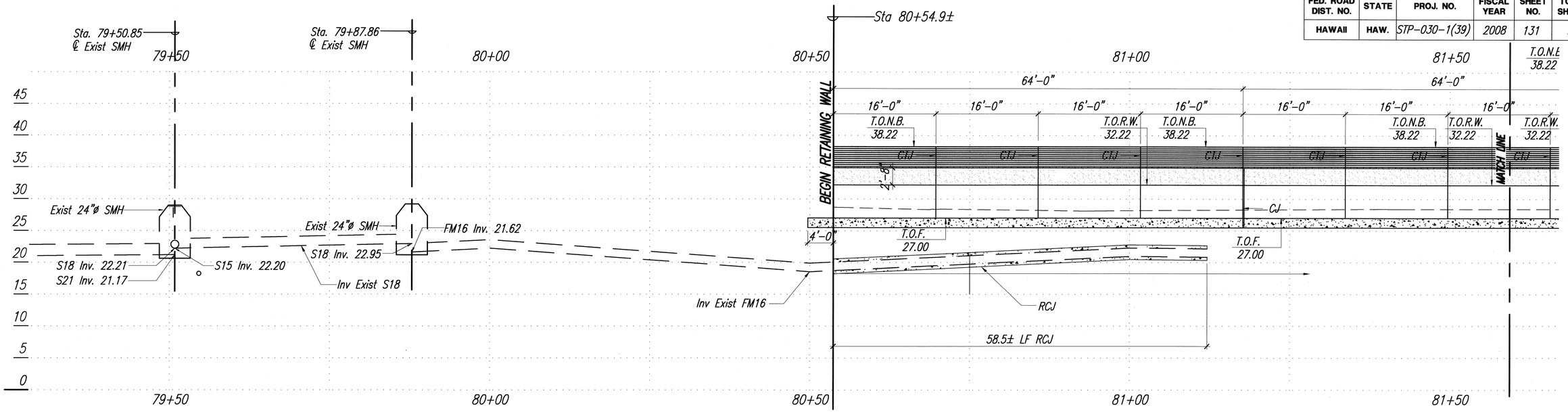

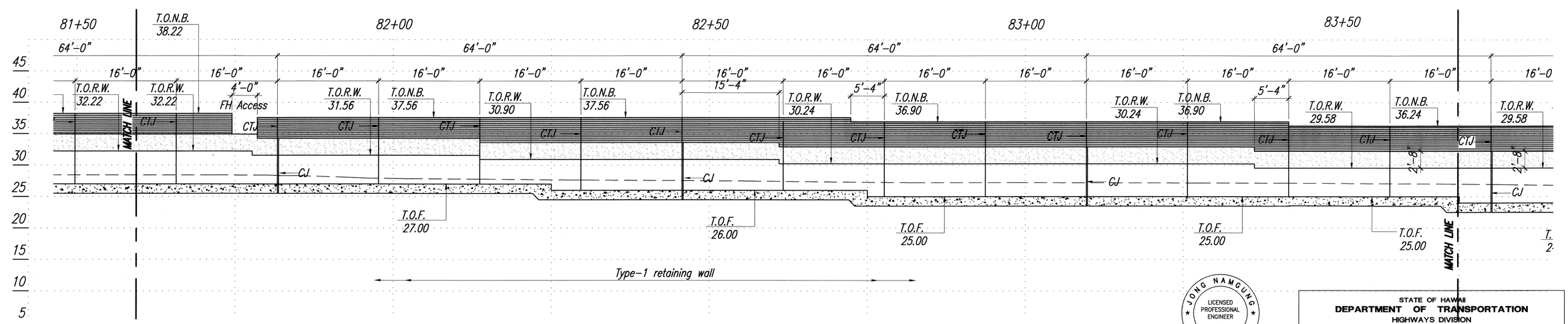

PARTIAL MAKAI RETAINING WALL ELEVATION

SCALE: 1/8" = 1'-0"

NOTE:

1. Foundation Details S-16 to S-19.

JONG NAMGUNG
LICENSED PROFESSIONAL ENGINEER
No. 3513-S
HAWAII, U.S.A.

THIS WORK WAS PREPARED BY ME OR UNDER MY SUPERVISION.

Jong Namgung

STATE OF HAWAII
DEPARTMENT OF TRANSPORTATION
HIGHWAYS DIVISION

PARTIAL MAKAI RETAINING WALL ELEVATION – (3)

Honoapiilani Highway Widening
Lahainaluna Road to Aholo Road
Project No. STP-030-1(39)

Scale: AS SHOWN Date: October 2008

SHEET No. S-27 OF 42 SHEETS

ORIGINAL PLAN | SURVEY PLOTTED BY | DRAWN BY | NOTE BOOK | TRACED BY | DESIGNED BY | QUANTITIES BY | CHECKED BY | DATE | No.

PATH/FILENAME: P:\Projects\Oahu-Hwy\Honoapiilani Highway Widening\dwg\Working Drawings\Trans MAA 3-17-08 (STRUCT FINAL)\S-25-S-38-RETAINING MAKAI WALLING LAST UPDATE: 02-22-2008 @ 02:32 pm PLOT DATE: 14-29-2008 @ 10:14 am

FED. ROAD DIST. NO.	STATE	PROJ. NO.	FISCAL YEAR	SHEET NO.	TOTAL SHEETS
HAWAII	HAW.	STP-030-1(39)	2008	132	194

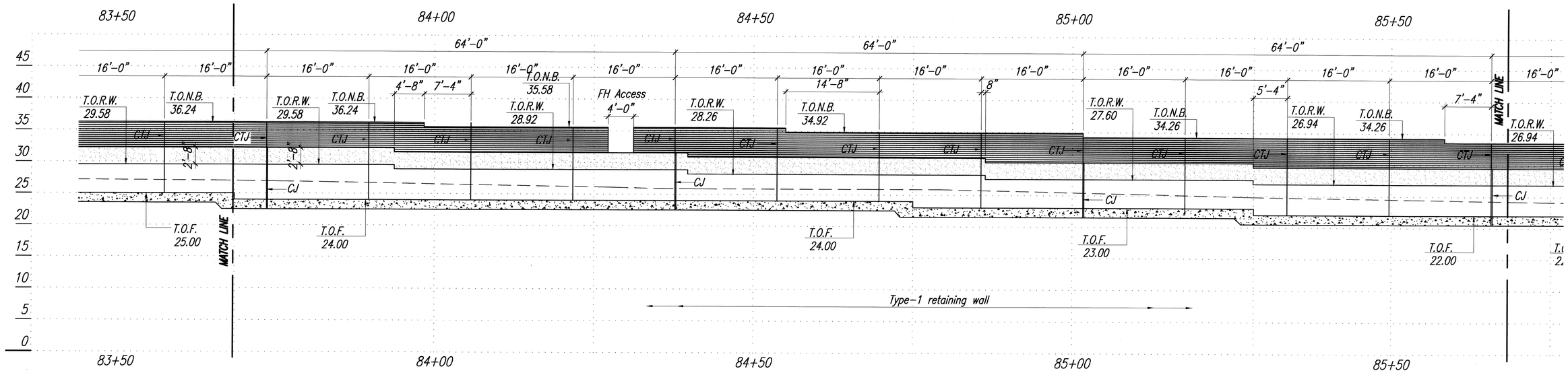

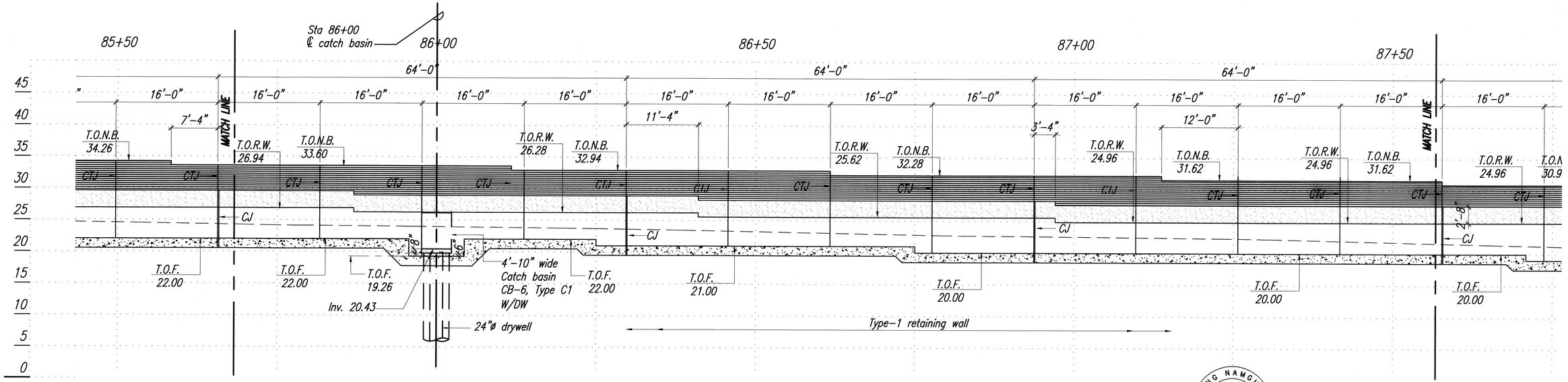

PARTIAL MAKAI RETAINING WALL ELEVATION

SCALE: 1/8" = 1'-0"

NOTE:

1. Foundation Details S-16 to S-19.

JONG NAMGUNG
LICENSED PROFESSIONAL ENGINEER
No. 3513-S
HAWAII, U.S.A.

THIS WORK WAS PREPARED BY ME OR UNDER MY SUPERVISION.

Jong Namgung

STATE OF HAWAII
DEPARTMENT OF TRANSPORTATION
HIGHWAYS DIVISION

PARTIAL MAKAI RETAINING WALL ELEVATION – (4)

Honoapiilani Highway Widening
Lahainaluna Road to Aholo Road
Project No. STP-030-1(39)

Scale: AS SHOWN Date: October 2008

SHEET No. S-28 OF 42 SHEETS

132

ORIGINAL PLAN | SURVEY PLOTTED BY | DRAWN BY | TRACED BY | DESIGNED BY | QUANTITIES BY | CHECKED BY | DATE | NOTE BOOK No.

PATH/FILENAME: P:\Projects\Oahu-Hwy\Honoapiilani Highway Widening\Dwg\Working Drawings\From MAA 3-17-08 (STRUCT FINAL)\S-25-S-38-RETAINING MAKAI WALL.DWG LAST UPDATED: 32-22-2008 @ 02:32 pm PLOT DATE: 14-29-2008 @ 10:14 am

FED. ROAD DIST. NO.	STATE	PROJ. NO.	FISCAL YEAR	SHEET NO.	TOTAL SHEETS
HAWAII	HAW.	STP-030-1(39)	2008	133	194

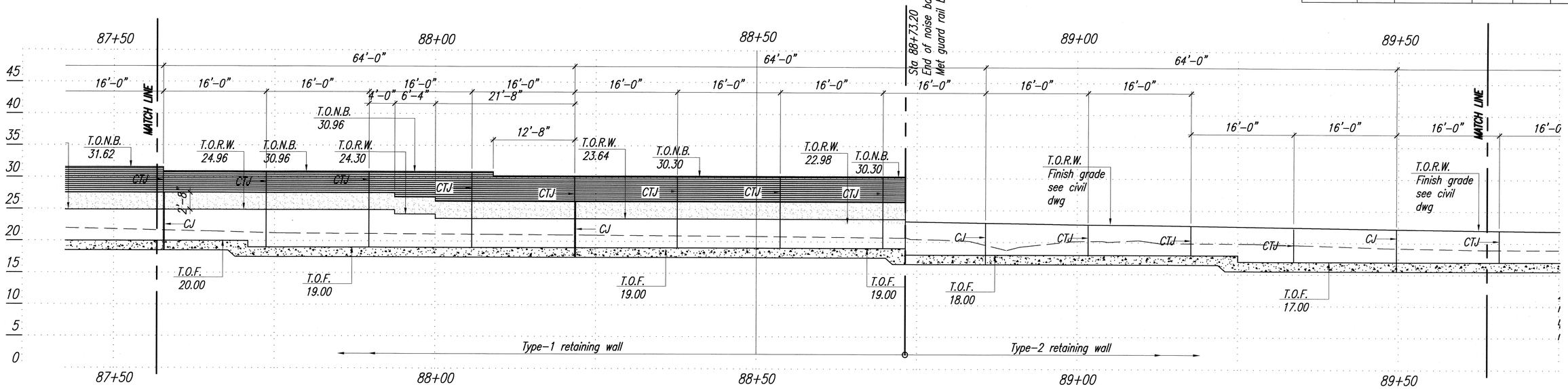

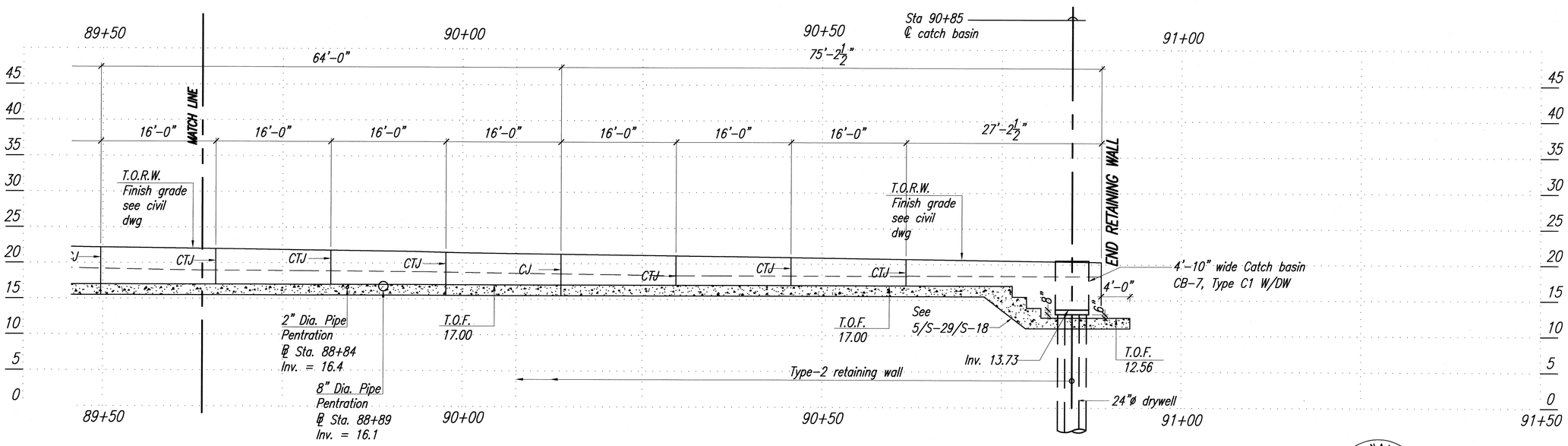

PARTIAL MAKAI RETAINING WALL ELEVATION

SCALE: 1/8" = 1'-0"

NOTE: Metal Guard Rails on top of the Retaining Wall Type-2 are not shown on Wall elevation. Refer to Structural drawing (S-11) and Civil drawings for Metal Guard Rail Details.

NOTE:

1. Foundation Details S-16 to S-19.

JONG NAMGUNG
LICENSED PROFESSIONAL ENGINEER
No. 3513-S
HAWAII, U.S.A.

THIS WORK WAS PREPARED BY ME OR UNDER MY SUPERVISION.

Jong Namgung

STATE OF HAWAII
DEPARTMENT OF TRANSPORTATION
HIGHWAYS DIVISION

PARTIAL MAKAI RETAINING WALL ELEVATION – (5)

Honoapiilani Highway Widening
Lahainaluna Road to Aholo Road
Project No. STP-030-1(39)

Scale: AS SHOWN Date: October 2008

SHEET No. S-29 OF 42 SHEETS

133

ORIGINAL PLAN	SURVEY PLOTTED BY	DATE
	DRAWN BY	"
	TRACED BY	"
NOTE BOOK	DESIGNED BY	"
	QUANTITIES BY	"
No.	CHECKED BY	"

PWD/FILENAME: P:\Projects\Job-hwy\Honoapiilani Highway Widening\dwg\Working Drawings\17-mm MAA S-17-08 (STRUCT FINAL)\S-25-S-38-RETAINING MAKAI WALL.DWG LAST UPDATE: 12-22-2008 @ 02:32 pm PLOT DATE: 14-29-2008 @ 10:14 am

FED. ROAD DIST. NO.	STATE	PROJ. NO.	FISCAL YEAR	SHEET NO.	TOTAL SHEETS
HAWAII	HAW.	STP-030-1(39)	2008	134	194

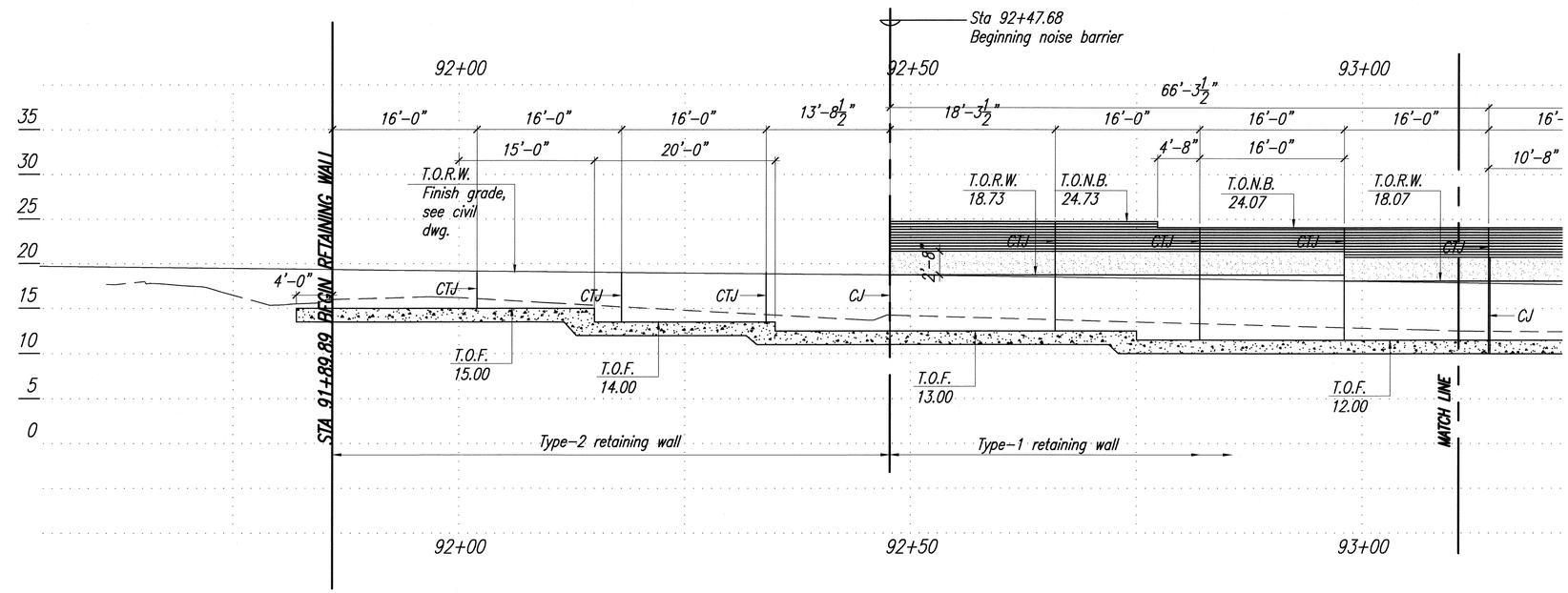

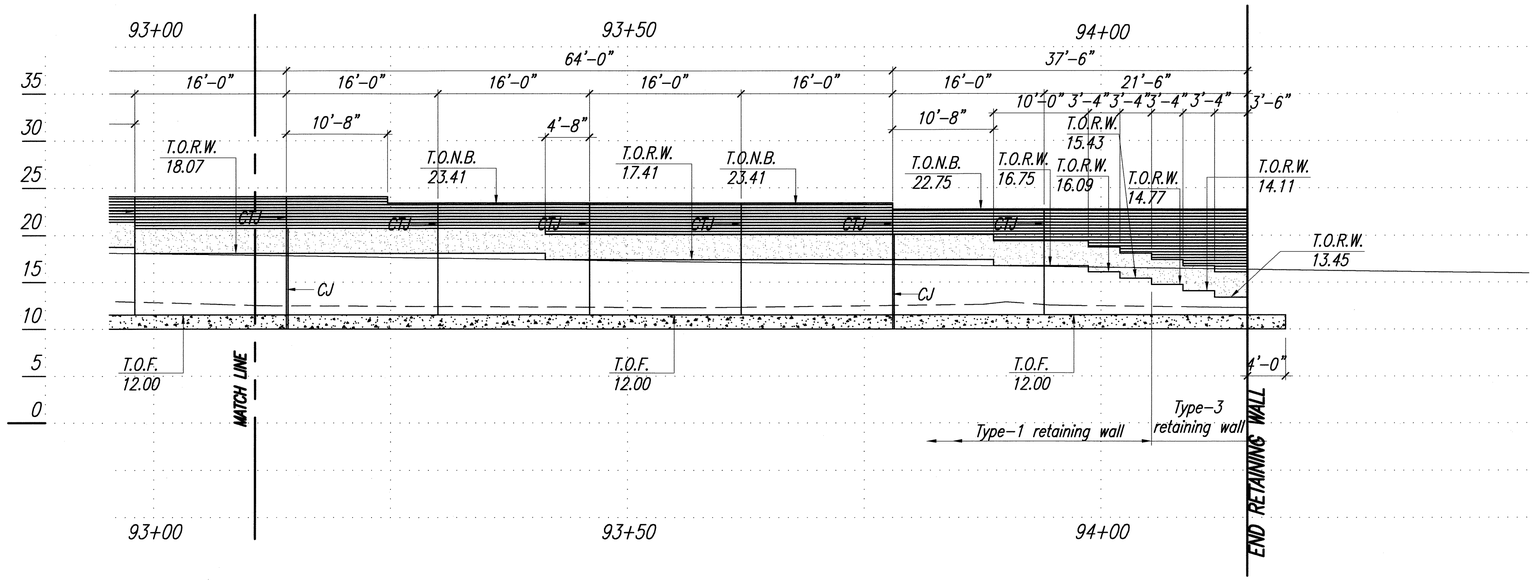

PARTIAL MAKAI RETAINING WALL ELEVATION

SCALE: 1/8" = 1'-0"

NOTES:

1. Metal Guard Rails on top of the Retaining Wall Type-2 are not shown on Wall elevation. Refer to Structural drawing (S-11) and Civil drawings for Metal Guard Rail Details.
2. Foundation Details S-16 to S-19.

JONG NAMGUNG
LICENSED PROFESSIONAL ENGINEER
No. 3513-S
HAWAII, U.S.A.

THIS WORK WAS PREPARED BY ME OR UNDER MY SUPERVISION.

Jong Namgung

STATE OF HAWAII
DEPARTMENT OF TRANSPORTATION
HIGHWAYS DIVISION

PARTIAL MAKAI RETAINING WALL ELEVATION – (6)

Honoapiilani Highway Widening
Lahainaluna Road to Aholo Road
Project No. STP-030-1(39)

Scale: AS SHOWN Date: October 2008

SHEET No. S-30 OF 42 SHEETS

ORIGINAL PLAN | SURVEY PLOTTED BY | DRAWN BY | TRACED BY | DESIGNED BY | QUANTITIES BY | CHECKED BY | DATE | NOTE BOOK | No.

PATH/FILENAME: P:\Projects\Oahu-Hwy\Honoapiilani Highway Widening\Aiea\Working Drawings\From MAA 3-17-08 (STRUCT FINAL)\S-25-S-38-RETAINING MAKAI WALL.DWG LAST UPDATE: 12-22-2008 @ 02:32 pm PLOT DATE: 14-29-2008 @ 10:14 am

FED. ROAD DIST. NO.	STATE	PROJ. NO.	FISCAL YEAR	SHEET NO.	TOTAL SHEETS
HAWAII	HAW.	STP-030-1(39)	2008	135	194

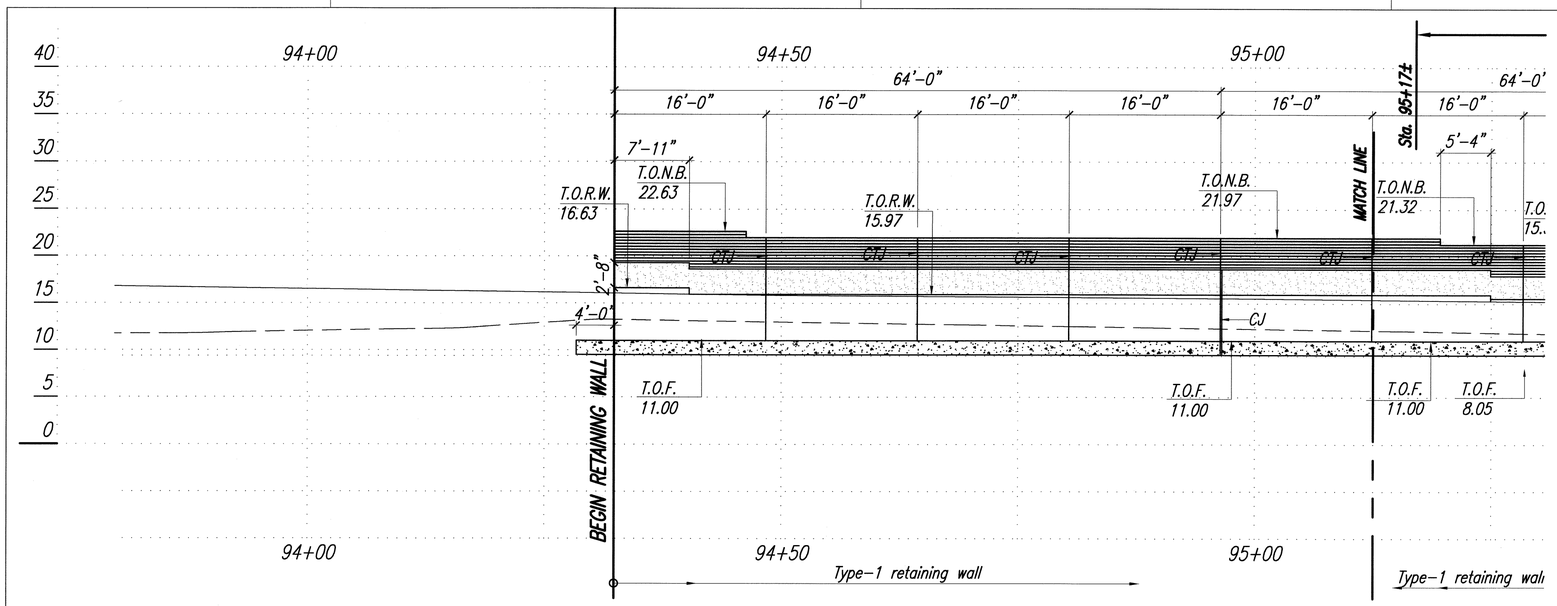

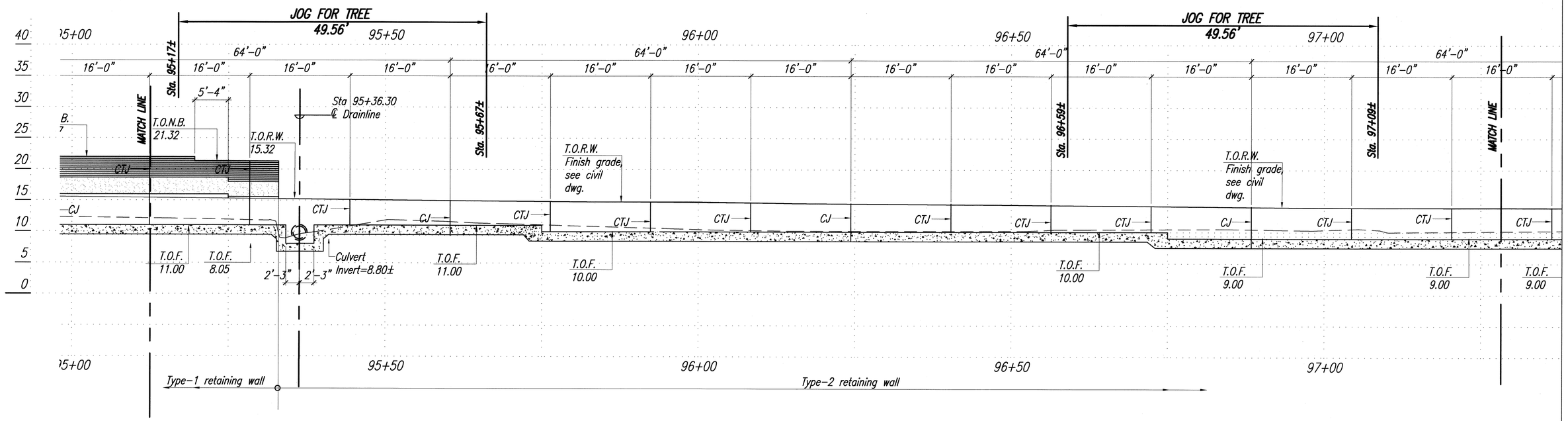

PARTIAL MAKAI RETAINING WALL ELEVATION

SCALE: 1/8" = 1'-0"

NOTES:

1. Metal Guard Rails on top of the Retaining Wall Type-2 are not shown on Wall elevation. Refer to Structural drawing (S-11) and Civil drawings for Metal Guard Rail Details.
2. Foundation Details S-16 to S-19.

JONG NAMGUNG
LICENSED PROFESSIONAL ENGINEER
No. 3513-S
HAWAII, U.S.A.

THIS WORK WAS PREPARED BY ME OR UNDER MY SUPERVISION.

Jong Namgung

STATE OF HAWAII
DEPARTMENT OF TRANSPORTATION
HIGHWAYS DIVISION

PARTIAL MAKAI RETAINING WALL
ELEVATION – (7)

Honoapiilani Highway Widening
Lahainaluna Road to Aholo Road
Project No. STP-030-1(39)

Scale: AS SHOWN Date: October 2008

SHEET No. S-31 OF 42 SHEETS

ORIGINAL PLAN	SURVEY PLOTTED BY	DATE
	DRAWN BY	" "
NOTE BOOK	TRACED BY	" "
	DESIGNED BY	" "
	QUANTITIES BY	" "
No.	CHECKED BY	" "

PATH/FILENAME: P:\Projects\Dot-Hwy\honoapiilani Highway Widening\Jong\Working Drawings\from MAA 3-17-08 (STRUCT FINAL)\S-25-S-38-RETAINING MAKAI WALL.DWG LAST UPDATE: 12-22-2008 @ 02:22 pm PLOT DATE: 14-29-2008 @ 10:14 am

FED. ROAD DIST. NO.	STATE	PROJ. NO.	FISCAL YEAR	SHEET NO.	TOTAL SHEETS
HAWAII	HAW.	STP-030-1(39)	2008	136	194

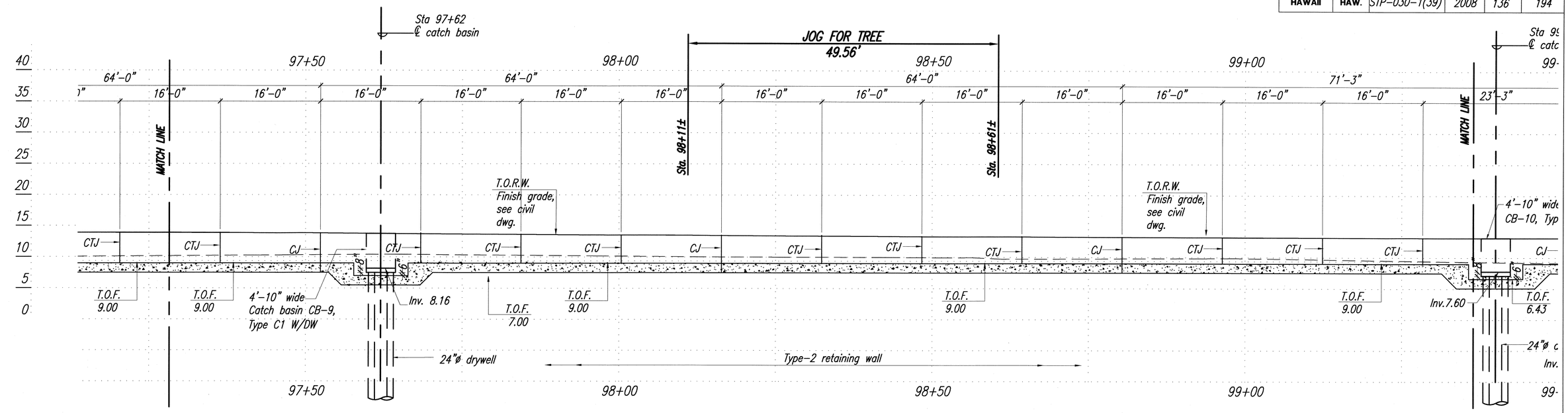

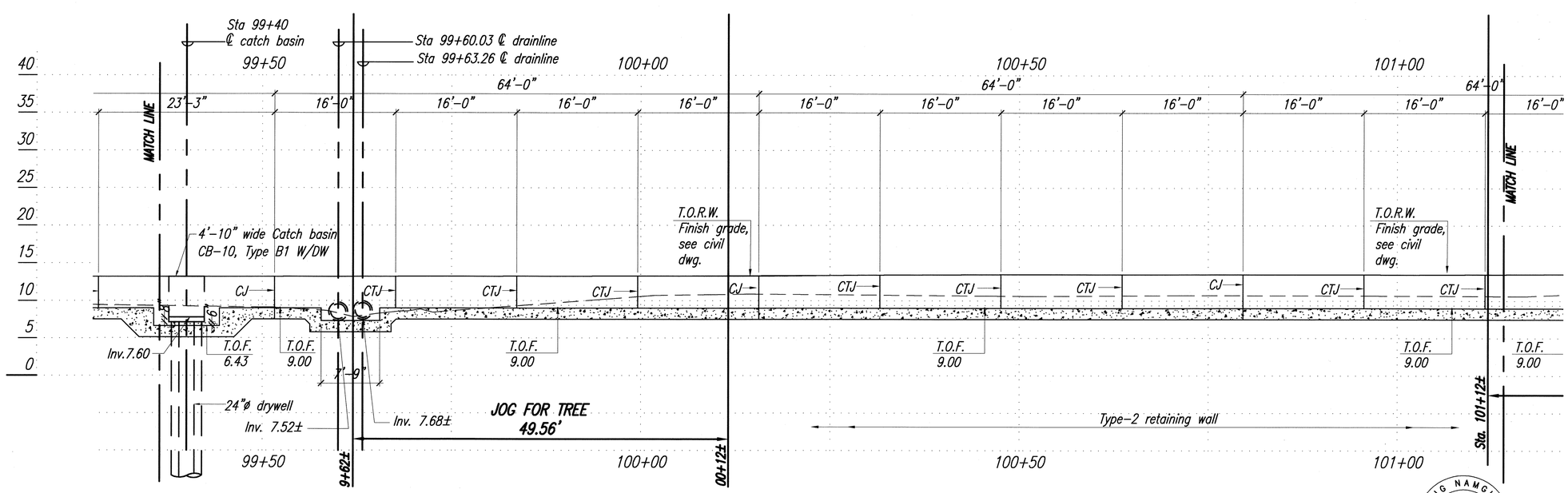

PARTIAL MAKAI RETAINING WALL ELEVATION

SCALE: 1/8" = 1'-0"

NOTES:

1. Metal Guard Rails on top of the Retaining Wall Type-2 are not shown on Wall elevation. Refer to Structural drawing (S-11) and Civil drawings for Metal Guard Rail Details.
2. Foundation Details S-16 to S-19.

JONG NAMGUNG
LICENSED PROFESSIONAL ENGINEER
No. 3513-S
HAWAII, U.S.A.

THIS WORK WAS PREPARED BY ME OR UNDER MY SUPERVISION.

Jong Namgung

STATE OF HAWAII
DEPARTMENT OF TRANSPORTATION
HIGHWAYS DIVISION

PARTIAL MAKAI RETAINING WALL
ELEVATION – (8)

Honoapiilani Highway Widening
Lahainaluna Road to Aholo Road
Project No. STP-030-1(39)

Scale: AS SHOWN Date: October 2008

SHEET No. S-32 OF 42 SHEETS

ORIGINAL PLAN | SURVEY PLOTTED BY | DRAWN BY | TRACED BY | DESIGNED BY | QUANTITIES BY | CHECKED BY | DATE

NOTE BOOK No.

PATH/FILENAME: P:\Projects\Dot-Hwy\Honoapiilani Highway Widening\Geo\Working Drawings\From MAA 3-17-08 (STRUCT FINAL)\S-25-S-38-RETAINING MAKAI WALL.DWG LAST UPDATE: 12-22-2008 @ 02:32 pm PLOT DATE: 14-29-2008 @ 10:14 am

FED. ROAD DIST. NO.	STATE	PROJ. NO.	FISCAL YEAR	SHEET NO.	TOTAL SHEETS
HAWAII	HAW.	STP-030-1(39)	2008	137	194

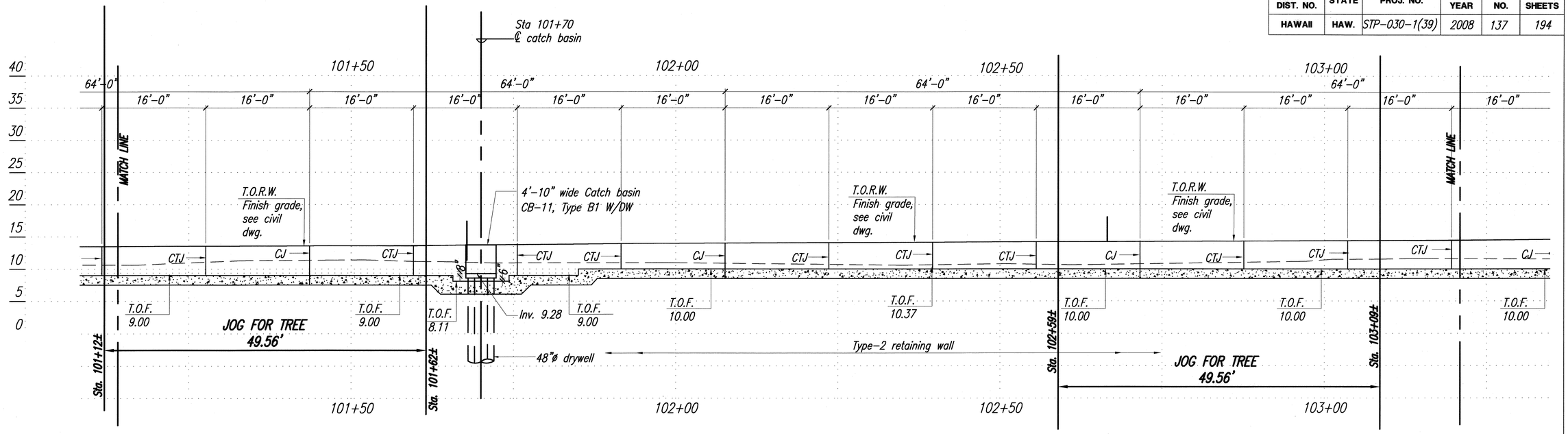

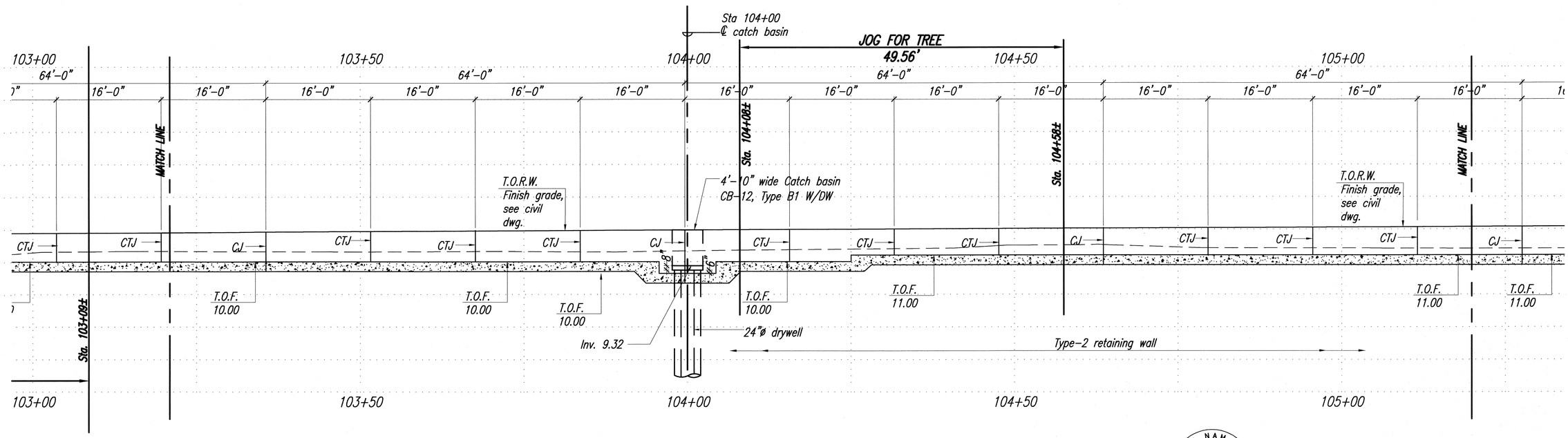

PARTIAL MAKAI RETAINING WALL ELEVATION

SCALE: 1/8" = 1'-0"

NOTES:

1. Metal Guard Rails on top of the Retaining Wall Type-2 are not shown on Wall elevation. Refer to Structural drawing (S-11) and Civil drawings for Metal Guard Rail Details.
2. Foundation Details S-16 to S-19.

JONG NAMGUNG
LICENSED PROFESSIONAL ENGINEER
No. 3513-S
HAWAII, U.S.A.

THIS WORK WAS PREPARED BY ME OR UNDER MY SUPERVISION.

Jong Namgung

STATE OF HAWAII
DEPARTMENT OF TRANSPORTATION
HIGHWAYS DIVISION

PARTIAL MAKAI RETAINING WALL ELEVATION - (9)

Honoapiilani Highway Widening
Lahainaluna Road to Aholo Road
Project No. STP-030-1(39)

Scale: AS SHOWN Date: October 2008

SHEET No. S-33 OF 42 SHEETS

ORIGINAL PLAN		
NOTE BOOK	SURVEY PLOTTED BY	DATE
	DRAWN BY	"
	TRACED BY	"
	DESIGNED BY	"
	QUANTITIES BY	"
No.	CHECKED BY	"

PATH/FILENAME: P:\Projects\Oahu-Hwy\Honoapiilani Highway Widening\Data\Working Drawings\From MAR 3-17-08 (STRUCT FINAL)\S-25-S-38-RETAINING MAKAI WALL.DWG LAST UPDATE: 32-22-2008 @ 02:32 pm PLOT DATE: 14-29-2008 @ 10:14 am

FED. ROAD DIST. NO.	STATE	PROJ. NO.	FISCAL YEAR	SHEET NO.	TOTAL SHEETS
HAWAII	HAW.	STP-030-1(39)	2008	138	194

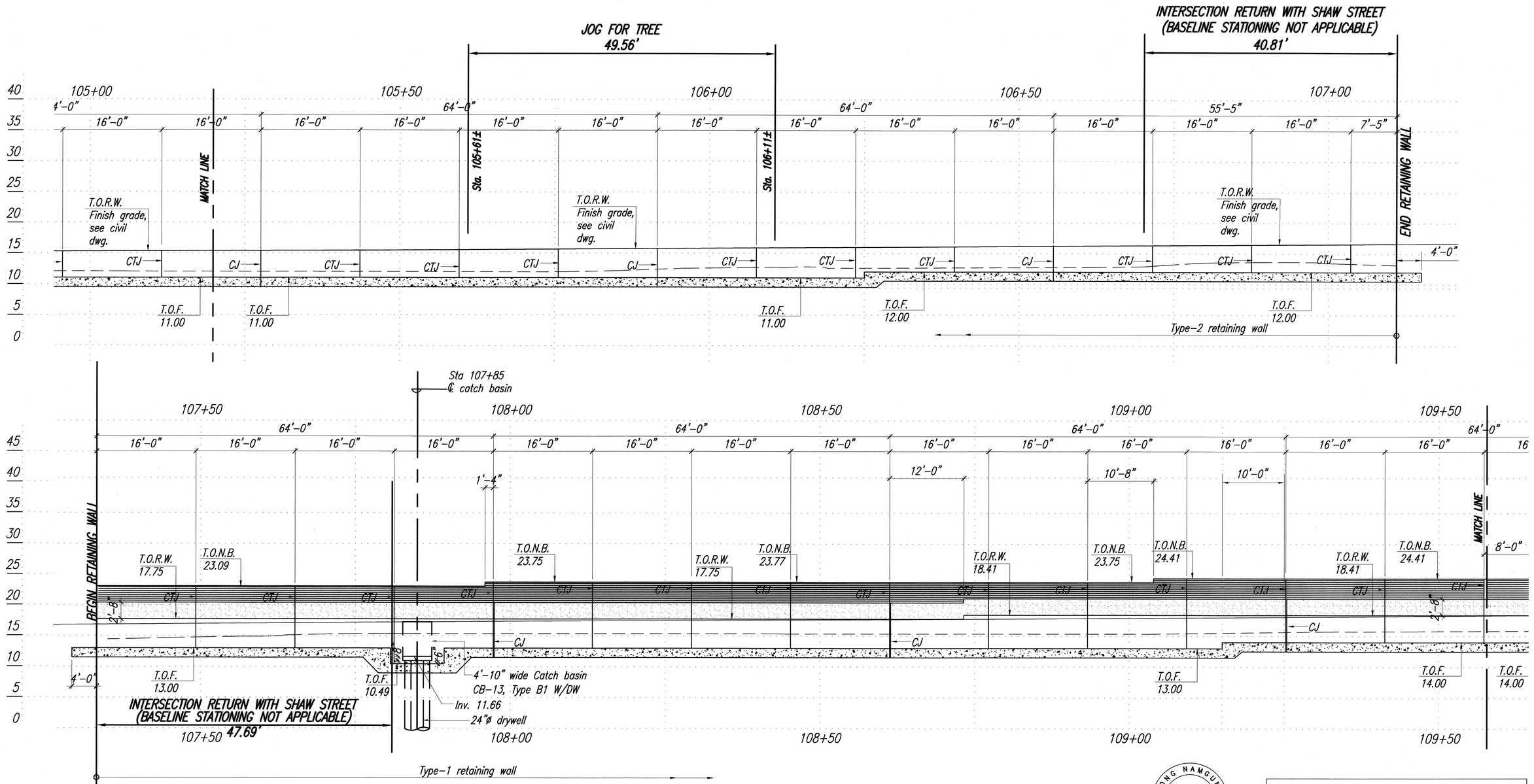

PARTIAL MAKAI RETAINING WALL ELEVATION

SCALE: 1/8" = 1'-0"

NOTES:

1. Metal Guard Rails on top of the Retaining Wall Type-2 are not shown on Wall elevation. Refer to Structural drawing (S-11) and Civil drawings for Metal Guard Rail Details.
2. Foundation Details S-16 to S-19.

JONG NAMGUNG
LICENSED PROFESSIONAL ENGINEER
No. 3513-S
HAWAII, U.S.A.

THIS WORK WAS PREPARED BY ME OR UNDER MY SUPERVISION.

Jong Namgung

STATE OF HAWAII
DEPARTMENT OF TRANSPORTATION
HIGHWAYS DIVISION

PARTIAL MAKAI RETAINING WALL
ELEVATION – (10)

Honoapiilani Highway Widening
Lahainaluna Road to Aholo Road
Project No. STP-030-1(39)

Scale: AS SHOWN Date: October 2008

SHEET No. S-34 OF 42 SHEETS

ORIGINAL PLAN	SURVEY PLOTTED BY	DATE
	DRAWN BY	"
NOTE BOOK	TRACED BY	"
	DESIGNED BY	"
	QUANTITIES BY	"
No.	CHECKED BY	"

PATH/FILENAME: P:\Projects\Dot-Hwy\honoapiilani Highway Widening\Aeg\Working Drawings\from MAK 3-17-08 (STRUCT FINAL)\S-25-S-38-RETAINING MAKAI WALL.DWG LAST UPDATE: 12-22-2008 @ 02:32 pm PLOT DATE: 11-29-2008 @ 10:15 am

FED. ROAD DIST. NO.	STATE	PROJ. NO.	FISCAL YEAR	SHEET NO.	TOTAL SHEETS
HAWAII	HAW.	STP-030-1(39)	2008	139	194

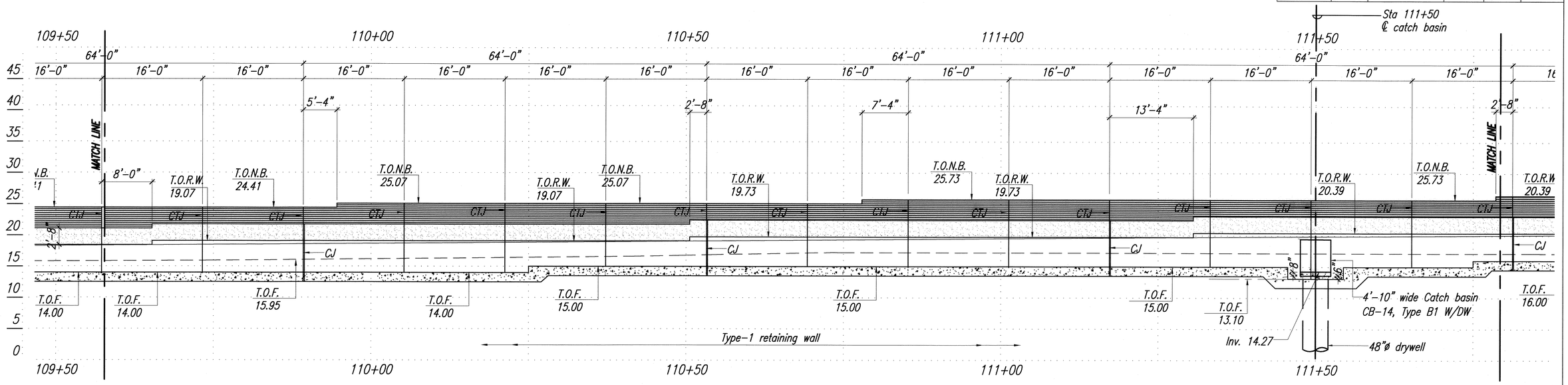

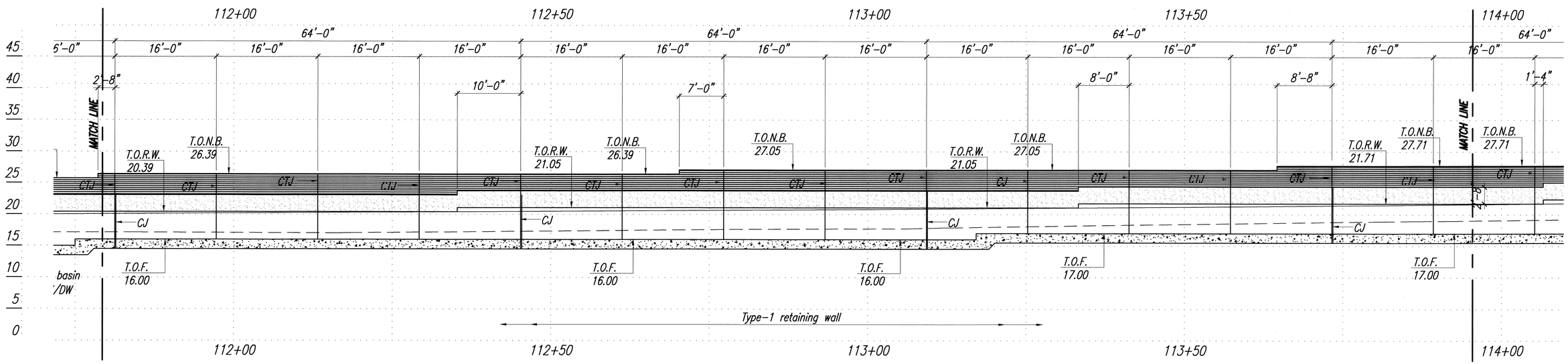

PARTIAL MAKAI RETAINING WALL ELEVATION

SCALE: 1/8" = 1'-0"

NOTES:

1. Foundation Details S-16 to S-19.

JONG NAMGUNG
LICENSED PROFESSIONAL ENGINEER
No. 3513-S
HAWAII, U.S.A.

THIS WORK WAS PREPARED BY ME OR UNDER MY SUPERVISION.

Jong Namgung

STATE OF HAWAII
DEPARTMENT OF TRANSPORTATION
HIGHWAYS DIVISION

PARTIAL MAKAI RETAINING WALL ELEVATION – (11)

Honoapiilani Highway Widening
Lahainaluna Road to Aholo Road
Project No. STP-030-1(39)

Scale: AS SHOWN Date: October 2008

SHEET No. S-35 OF 42 SHEETS

ORIGINAL PLAN	SURVEY PLOTTED BY	DATE
	DRAWN BY	"
NOTE BOOK	TRACED BY	"
	DESIGNED BY	"
	QUANTITIES BY	"
No.	CHECKED BY	"

PATH/FILENAME: P:\Projects\Oahu-Hwy\Honoapiilani Highway Widening\Aiea\Working Drawings\From MAA 3-17-08 (STRUCT FINAL)\S-25-S-38-RETAINING WALL.DWG LAST UPDATE: 12-22-2008 @ 02:32 pm PLOT DATE: 12-29-2008 @ 10:15 am

FED. ROAD DIST. NO.	STATE	PROJ. NO.	FISCAL YEAR	SHEET NO.	TOTAL SHEETS
HAWAII	HAW.	STP-030-1(39)	2008	140	194

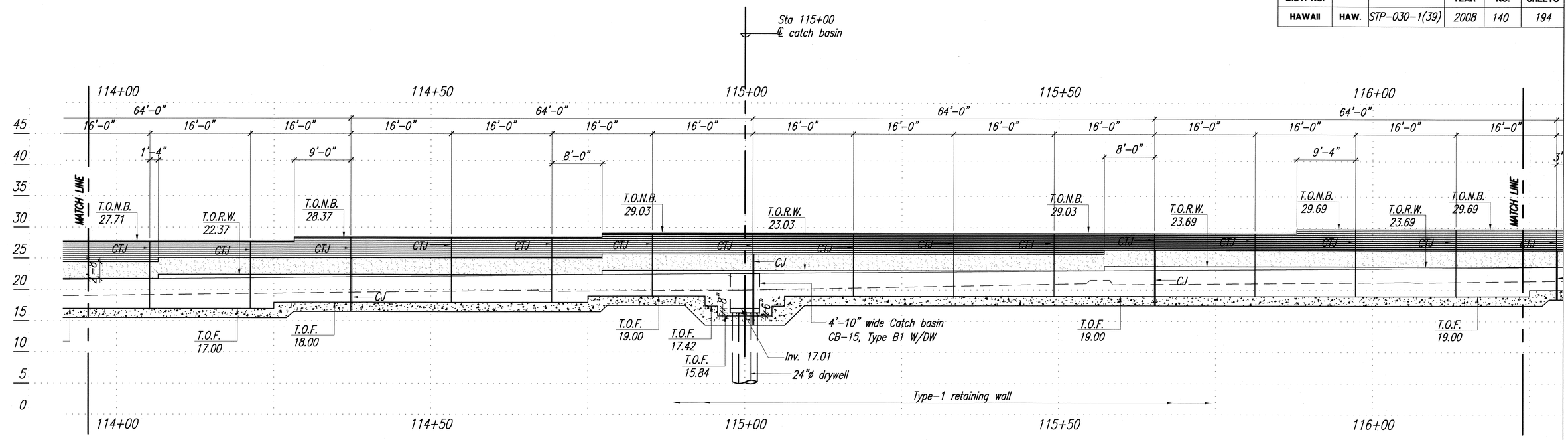

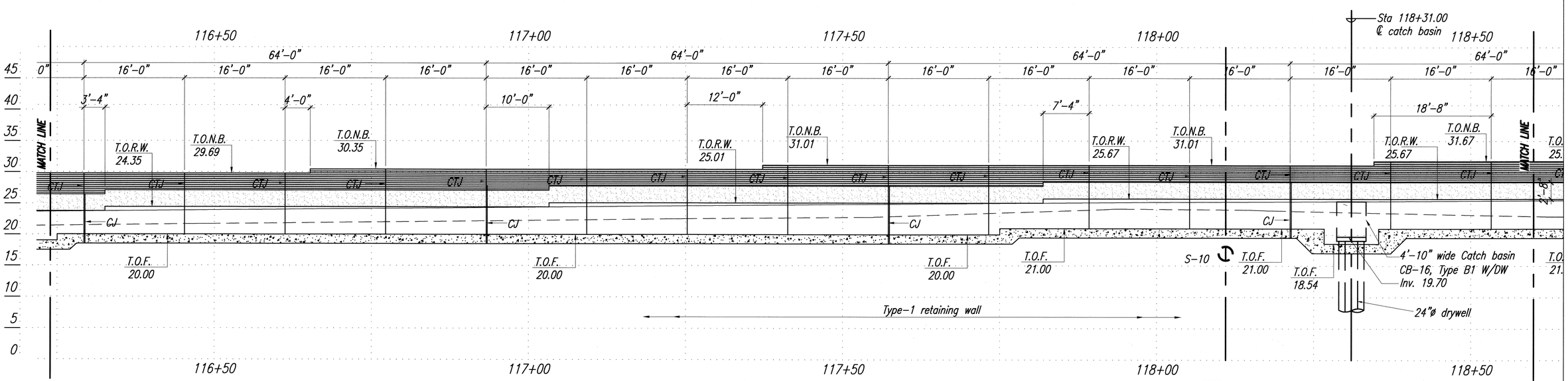

PARTIAL MAKAI RETAINING WALL ELEVATION

SCALE: 1/8" = 1'-0"

NOTES:

1. Foundation Details S-16 to S-19.

JONG NAMGUNG
LICENSED PROFESSIONAL ENGINEER
No. 3513-S
HAWAII, U.S.A.

THIS WORK WAS PREPARED BY ME OR UNDER MY SUPERVISION.

Jong Namgung

STATE OF HAWAII
DEPARTMENT OF TRANSPORTATION
HIGHWAYS DIVISION

PARTIAL MAKAI RETAINING WALL ELEVATION – (12)

Honoapiilani Highway Widening
Lahainaluna Road to Aholo Road
Project No. STP-030-1(39)

Scale: AS SHOWN Date: October 2008

SHEET No. S-36 OF 42 SHEETS

ORIGINAL PLAN	SURVEY PLOTTED BY	DATE
NOTE BOOK	DRAWN BY	"
	TRACED BY	"
	DESIGNED BY	"
	QUANTITIES BY	"
No.	CHECKED BY	"

PATH/FILENAME: P:\Projects\Q4-hwy\honoapiilani Highway Widening\dwg\Working Drawings\From MAA 3-17-08 (STRUCT FINAL)\S-25-S-38-RETAINING MAKAI WALL.DWG LAST UPDATE: 12-22-2008 @ 02:32 pm PLOT DATE: 12-29-2008 @ 10:15 am

FED. ROAD DIST. NO.	STATE	PROJ. NO.	FISCAL YEAR	SHEET NO.	TOTAL SHEETS
HAWAII	HAW.	STP-030-1(39)	2008	141	194

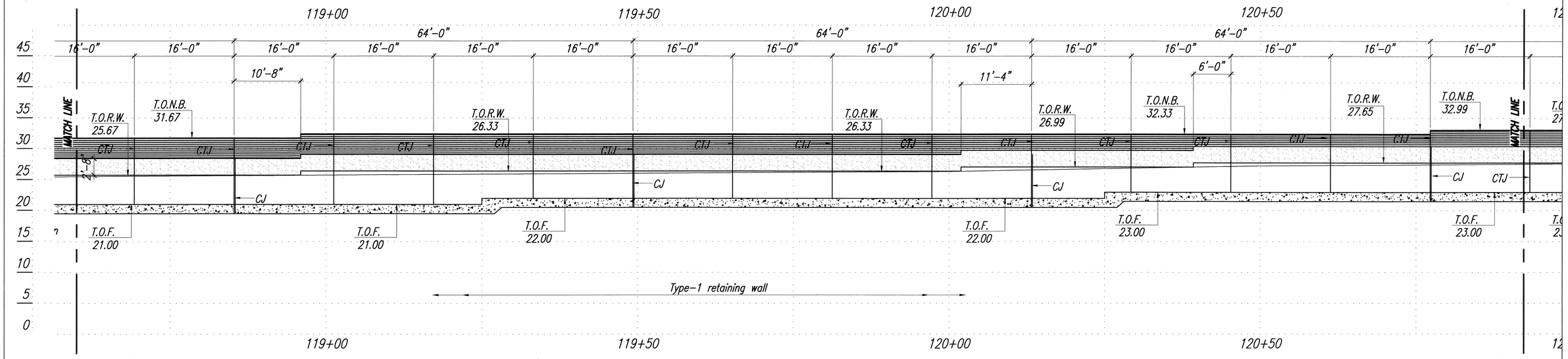

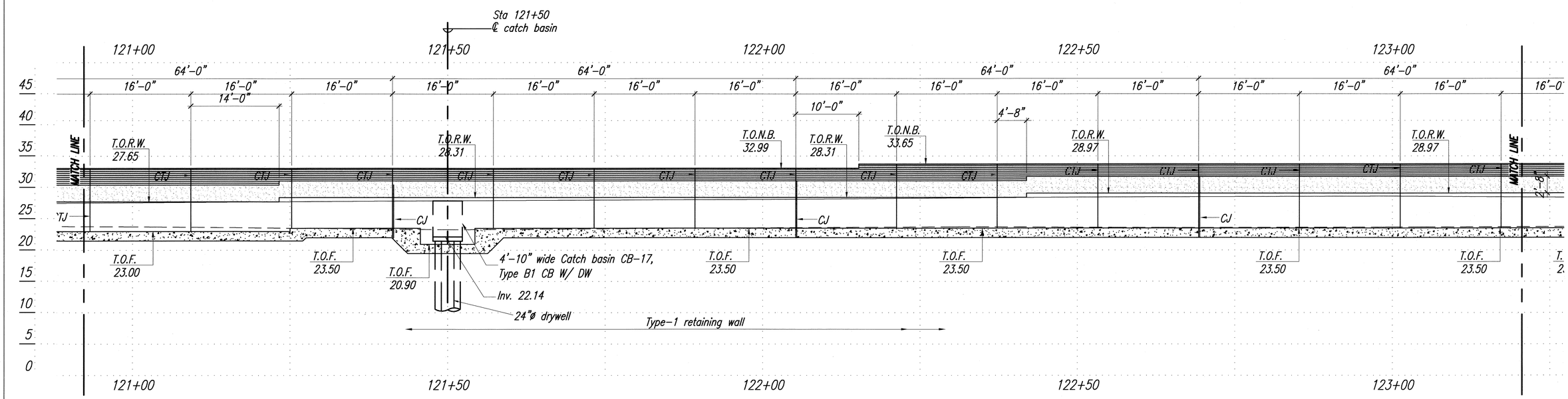

PARTIAL MAKAI RETAINING WALL ELEVATION

SCALE: 1/8" = 1'-0"

NOTES:

1. Foundation Details S-16 to S-19.

JONG NAMGUNG
LICENSED PROFESSIONAL ENGINEER
No. 3513-S
HAWAII, U.S.A.

THIS WORK WAS PREPARED BY ME OR UNDER MY SUPERVISION.

Jong Namgung

STATE OF HAWAII
DEPARTMENT OF TRANSPORTATION
HIGHWAYS DIVISION

PARTIAL MAKAI RETAINING WALL ELEVATION – (13)

Honoapiilani Highway Widening
Lahainaluna Road to Aholo Road
Project No. STP-030-1(39)

Scale: AS SHOWN Date: October 2008

SHEET No. S-37 OF 42 SHEETS

ORIGINAL PLAN | SURVEY PLOTTED BY | DRAWN BY | NOTE BOOK | TRACED BY | DESIGNED BY | QUANTITIES BY | CHECKED BY | No. | DATE

PATH/FILENAME: P:\Projects\Oahu-Hwy\Honoapiilani Highway Widening\dwg\Working Drawings\From MAA 5-17-08 (STRUCT FINAL)\S-25-S-38-RETAINING MAKAI WALL.DWG LAST UPDATE: 32-22-2008 @ 02:32 pm PLOT DATE: 15-29-2008 @ 10:15 am

FED. ROAD DIST. NO.	STATE	PROJ. NO.	FISCAL YEAR	SHEET NO.	TOTAL SHEETS
HAWAII	HAW.	STP-030-1(39)	2008	142	194

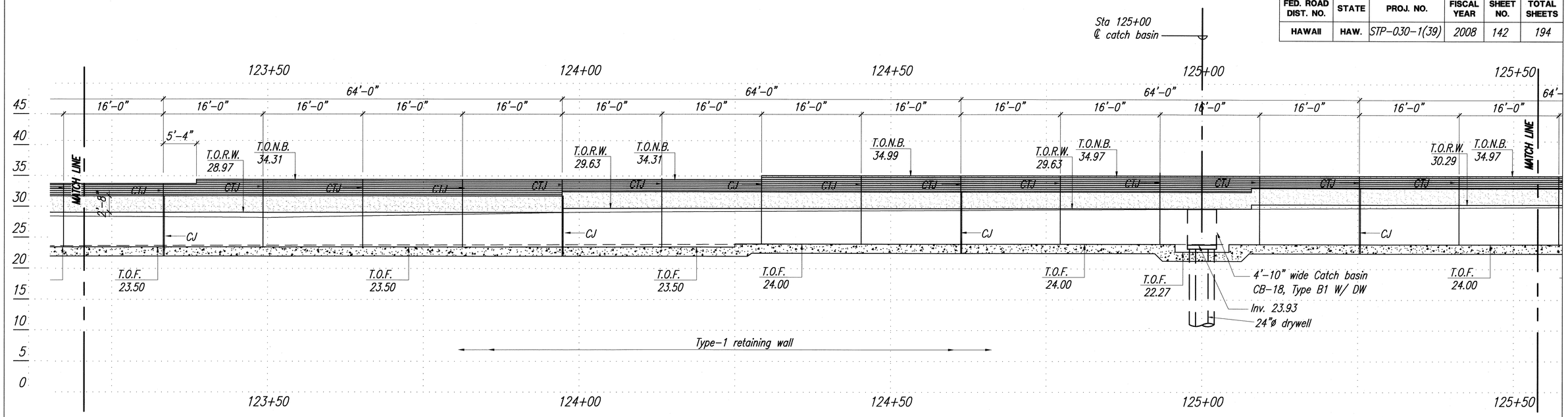

INTERSECTION RETURN WITH
AHOLO ROAD
(BASELINE STATIONING NOT APPLICABLE)

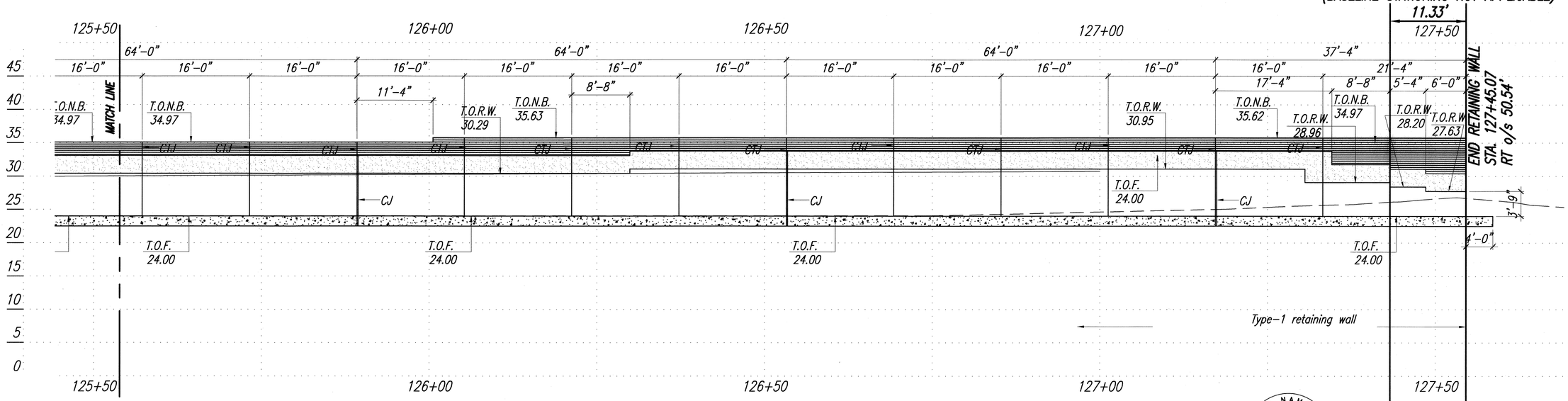

PARTIAL MAKAI RETAINING WALL ELEVATION

SCALE: 1/8" = 1'-0"

NOTES:

1. Foundation Details S-16 to S-19.

JONG NAMGUNG
LICENSED PROFESSIONAL ENGINEER
No. 3513-S
HAWAII, U.S.A.

THIS WORK WAS PREPARED BY ME OR UNDER MY SUPERVISION.

Jong Namgung

STATE OF HAWAII
DEPARTMENT OF TRANSPORTATION
HIGHWAYS DIVISION

PARTIAL MAKAI RETAINING WALL
ELEVATION – (14)

Honoapiilani Highway Widening
Lahainaluna Road to Aholo Road
Project No. STP-030-1(39)

Scale: AS SHOWN Date: October 2008

SHEET No. S-38 OF 42 SHEETS

142

ORIGINAL PLAN | SURVEY PLOTTED BY | DRAWN BY | TRACED BY | DESIGNED BY | QUANTITIES BY | CHECKED BY | DATE
NOTE BOOK No.

PATH/FILENAME: P:\Projects\04-Hwy\Honoapiilani Highway Widening\Dwg\Working Drawings\From MAA 3-17-08 (STRUCT FINAL)\S-25-S-38-RETAINING MAKAI WALL.DWG LAST UPDATE: 12-22-2008 @ 02:32 pm PLOT DATE: 12-29-2008 @ 10:15 am

FED. ROAD DIST. NO.	STATE	PROJ. NO.	FISCAL YEAR	SHEET NO.	TOTAL SHEETS
HAWAII	HAW.	STP-030-1(39)	2008	143	194

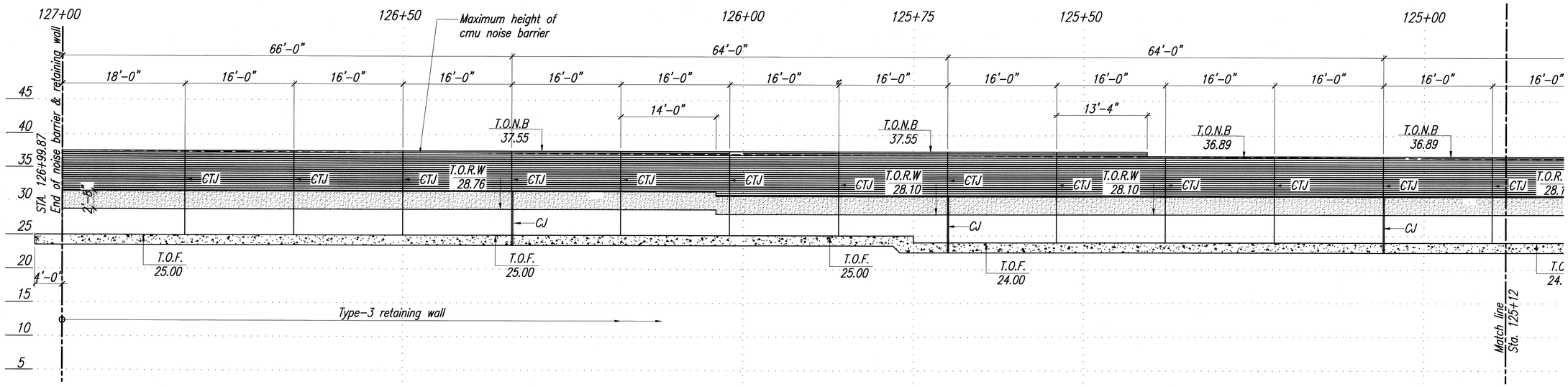

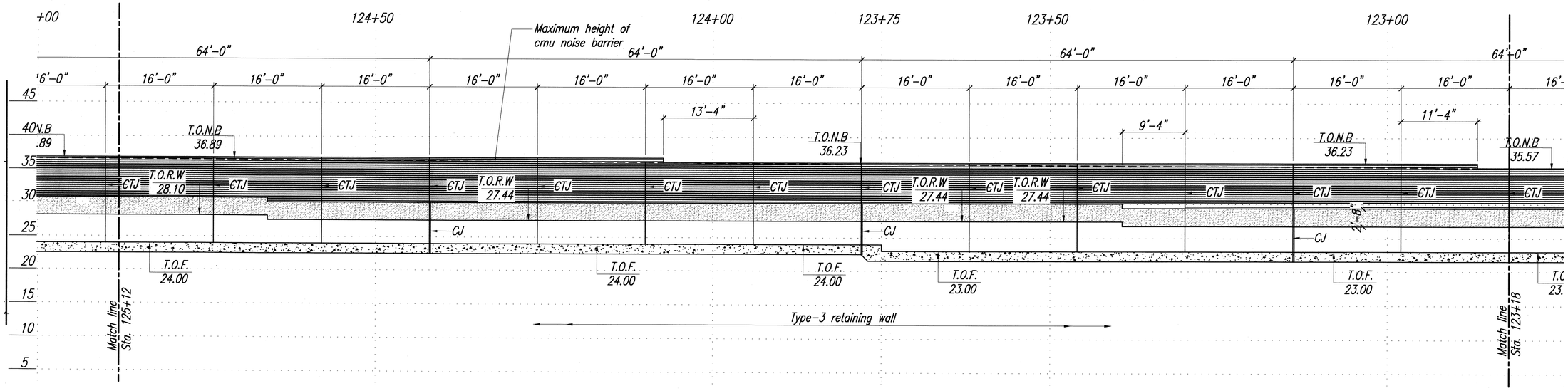

PARTIAL MAUKA RETAINING WALL ELEVATION

SCALE: 1/8" = 1'-0"

NOTE:

1. Foundation Details S-16 to S-19.

LEGEND

T.O.N.B	Denotes top of noise barrier
T.O.R.W	Denotes top of retaining wall
T.O.F	Denotes top of footing
C.J	Denotes construction joint
C.T.J	Denotes control joint

JONG NAMGUNG LICENSED PROFESSIONAL ENGINEER No. 3513-S HAWAII, U.S.A.

THIS WORK WAS PREPARED BY ME OR UNDER MY SUPERVISION.

Jong Namgung

STATE OF HAWAII
DEPARTMENT OF TRANSPORTATION
HIGHWAYS DIVISION

PARTIAL MAUKA RETAINING WALL
ELEVATION – (1)
Honoapiilani Highway Widening
Lahainaluna Road to Aholo Road
Project No. STP-030-1(39)

Scale: AS SHOWN Date: October 2008

SHEET No. S-39 OF 42 SHEETS

143

ORIGINAL PLAN	SURVEY PLOTTED BY	DATE
	DRAWN BY	" "
NOTE BOOK	TRACED BY	" "
	DESIGNED BY	" "
No.	QUANTITIES BY	" "
	CHECKED BY	" "

PATH/FILENAME: P:\Projects\30-1wy\Honoapiilani Highway Widening\Dwg\Working Drawings\From MAA 3-17-08 (STRUCT FINAL)\S-39-S-42-RETAIN WALL MAUKA2.dwg LAST UPDATE: 10-22-2008 @ 02:30 pm PLOT DATE: 10-29-2008 @ 10:25 am

FED. ROAD DIST. NO.	STATE	PROJ. NO.	FISCAL YEAR	SHEET NO.	TOTAL SHEETS
HAWAII	HAW.	STP-030-1(39)	2008	144	194

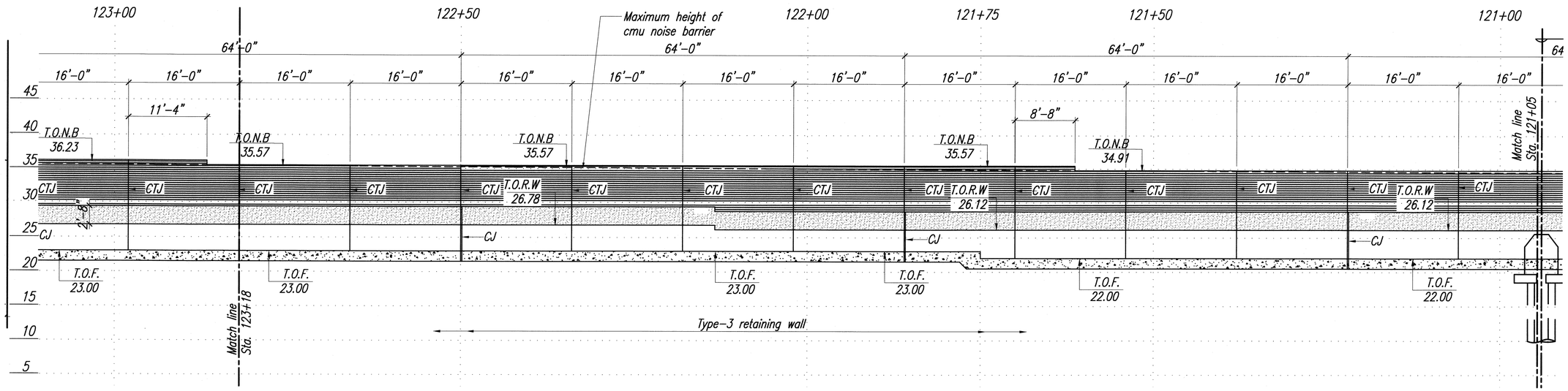

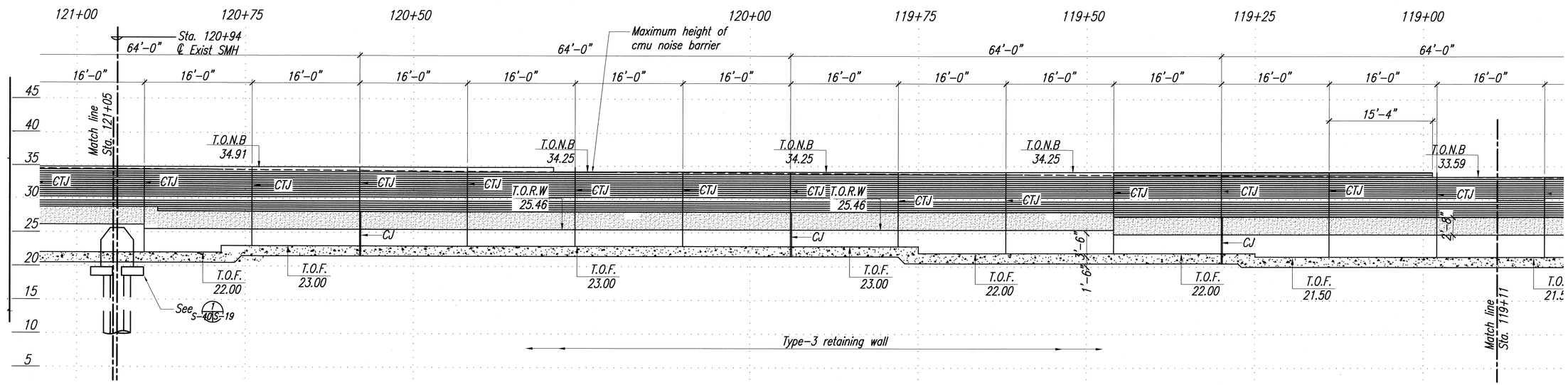

PARTIAL MAUKA RETAINING WALL ELEVATION

SCALE: 1/8" = 1'-0"

NOTE:

1. Foundation Details S-16 to S-19.

JONG NAMGUNG
LICENSED PROFESSIONAL ENGINEER
No. 3513-S
HAWAII, U.S.A.

THIS WORK WAS PREPARED BY ME OR UNDER MY SUPERVISION.

Jong Namgung

STATE OF HAWAII
DEPARTMENT OF TRANSPORTATION
HIGHWAYS DIVISION

PARTIAL MAUKA RETAINING WALL ELEVATION – (2)

Honoapiilani Highway Widening
Lahainaluna Road to Aholo Road
Project No. STP-030-1(39)

Scale: AS SHOWN Date: October 2008

SHEET No. S-40 OF 42 SHEETS

144

ORIGINAL PLAN	SURVEY PLOTTED BY	DATE
	DRAWN BY	"
NOTE BOOK	TRACED BY	"
	DESIGNED BY	"
	QUANTITIES BY	"
No.	CHECKED BY	"

PATH/FILENAME: P:\Projects\Doc-Hwy\Honoapiilani Highway Widening\Ver5\Working Drawings\From MAR 3-17-08 (STRUCT FINAL)\S-39-S-42-RETAIN WALL MAUKA2.dwg LAST UPDATE: 30-22-2008 @ 02:30 pm PLOT DATE: 25-29-2008 @ 10:25 am

FED. ROAD DIST. NO.	STATE	PROJ. NO.	FISCAL YEAR	SHEET NO.	TOTAL SHEETS
HAWAII	HAW.	STP-030-1(39)	2008	145	194

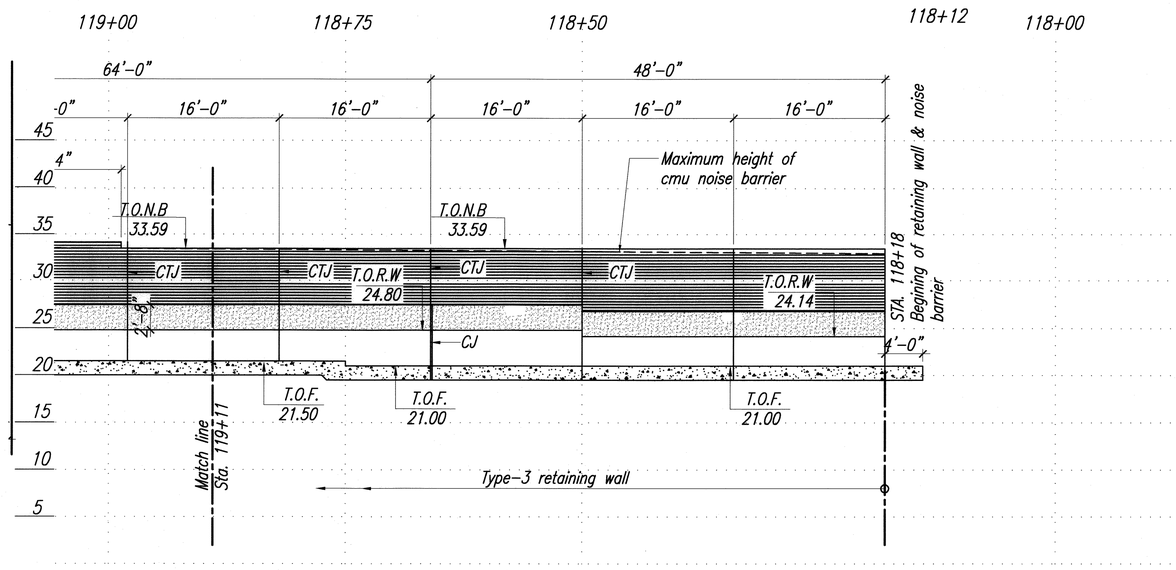

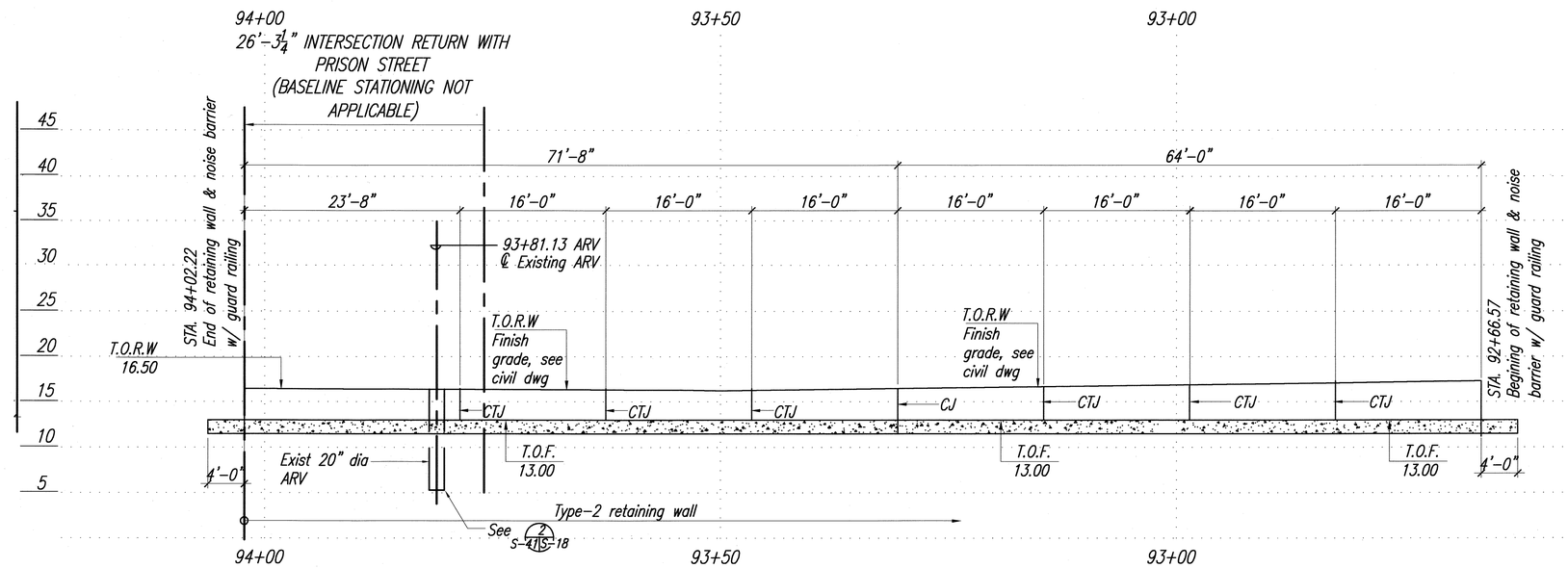

PARTIAL MAUKA RETAINING WALL ELEVATION

SCALE: 1/8" = 1'-0"

NOTE:

1. Foundation Details S-16 to S-19.

JONG NAMGUNG
LICENSED PROFESSIONAL ENGINEER
No. 3513-S
HAWAII, U.S.A.

THIS WORK WAS PREPARED BY ME OR UNDER MY SUPERVISION.

Jong Namgung

STATE OF HAWAII
DEPARTMENT OF TRANSPORTATION
HIGHWAYS DIVISION

PARTIAL MAUKA RETAINING WALL
ELEVATION – (3)
Honoapiilani Highway Widening
Lahainaluna Road to Aholo Road
Project No. STP-030-1(39)

Scale: AS SHOWN Date: October 2008

SHEET No. S-41 OF 42 SHEETS

ORIGINAL PLAN | SURVEY PLOTTED BY | DRAWN BY | TRACED BY | DESIGNED BY | QUANTITIES BY | CHECKED BY | DATE
NOTE BOOK No.

PATH/FILENAME: P:\Projects\Oahu-Hwy\Honoapiilani Highway Widening\Dwg\Working Drawings\From MAA 3-17-08 (STRUCT FINAL)\S-39-S-42-RETAIN WALL MAUKA2.dwg LAST UPDATE: 30-22-2008 @ 02:30 pm PLOT DATE: 25-29-2008 @ 10:25 am

FED. ROAD DIST. NO.	STATE	PROJ. NO.	FISCAL YEAR	SHEET NO.	TOTAL SHEETS
HAWAII	HAW.	STP-030-1(39)	2008	146	194

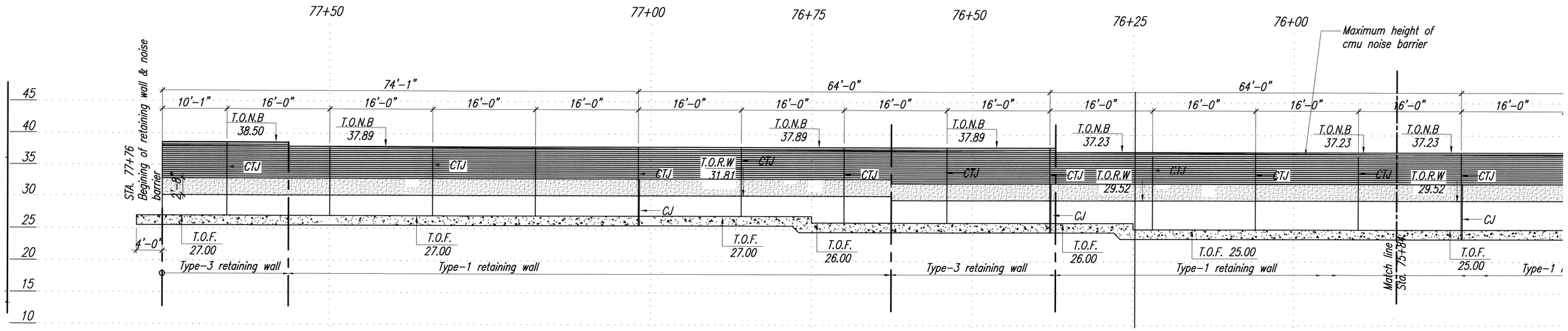

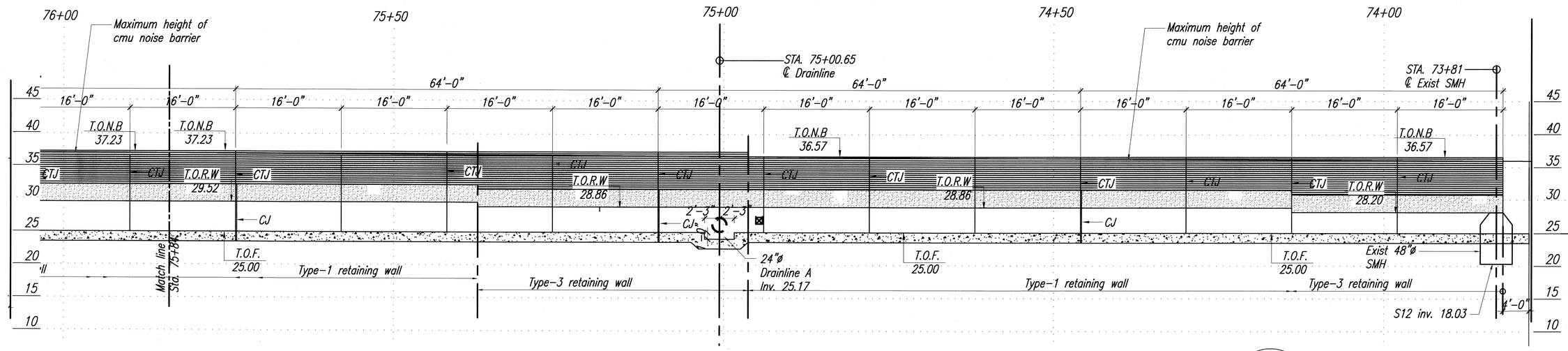

PARTIAL MAUKA RETAINING WALL ELEVATION

SCALE: 1/8" = 1'-0"

NOTE:

1. Foundation Details S-16 to S-19.

JONG NAMGUNG
LICENSED PROFESSIONAL ENGINEER
No. 3513-S
HAWAII, U.S.A.

THIS WORK WAS PREPARED BY ME OR UNDER MY SUPERVISION.

Jong Namgung

STATE OF HAWAII
DEPARTMENT OF TRANSPORTATION
HIGHWAYS DIVISION

PARTIAL MAUKA RETAINING WALL ELEVATION – (4)

Honoapiilani Highway Widening
Lahainaluna Road to Aholo Road
Project No. STP-030-1(39)

Scale: AS SHOWN Date: October 2008

SHEET No. S-42 OF 42 SHEETS

ORIGINAL PLAN | SURVEY PLOTTED BY | DRAWN BY | NOTE BOOK | TRACED BY | DESIGNED BY | QUANTITIES BY | CHECKED BY | DATE | No.

PATH/FILENAME: P:\Projects\Oahu-Hwy\Honoapiilani Highway Widening\dwg\Working Drawings\from MAA 3-17-08 (STRUCT FINAL)\S-39-S-42-RETAIN WALL MAUKA2.dwg LAST UPDATE: 30-22-2008 @ 02:30 pm PLOT DATE: 25-29-2008 @ 10:25 am