FED. ROAD DIST. NO.	STATE	FED. AID PROJ. NO.	FISCAL YEAR	SHEET NO.	TOTAL SHEETS
HAWAII	HAW.	BR-NH-030-01(24)	2000	49	139

INDEX TO DRAWINGS

GENERAL NOTES

GENERAL SPECIFICATIONS:

Hawaii Department of Transportation, Standard Specifications for Road and Bridge Construction, 1994; together with Special Provisions prepared for this contract.

DESIGN SPECIFICATIONS:

AASHTO 1992 Standard Specifications for Highways, Bridges (Fifteenth Edition) and its subsequent interim specifications with interim supplements and modifications by the Highways Division, Department of Transportation, State of Hawaii.

DESIGN LOADS:

A. Dead Load: An allowance of 20 p.s.f. for future wearing surface of asphalt concrete has been provided in the design.

B. Live Load: AASHTO HS20-44 or Interstate Loading.

C. Seismic Loads: Acceleration Coefficient -- 0.25
Design Seismic Performance Category -- C

MATERIALS:

A. All concrete strengths shall be as noted below:

Item No.	Structural Parts	Classes of Concrete	Specified Compressive Strength, f'_c(28 days)
1	Prestressed Girders	-	6,000 p.s.i.
2	Columns, Abutment Footings, Abutment Walls and Retaining Walls including Wingwalls	-	5,000 p.s.i.
3	Concrete Rails and End Posts	-	4,000 p.s.i.
4	Bridge Deck and Diaphragm	BD	3,750 p.s.i.
5	All Others except as noted otherwise	A	3,000 p.s.i.

B. All reinforcing steel shall be ASTM A 615, grade 60 unless noted otherwise.

C. Reinforcing steel shall be ASTM A 706 where welded connections are shown.

D. All structural steel shall be ASTM A-36 hot-dip galvanized after fabrication unless noted otherwise.

E. All anchor bolts, washers and nuts shall be ASTM A-307 hot-dip galvanized after fabrication unless noted otherwise.

F. For materials of prestressed concrete girders, see applicable prestressed concrete notes.

G. Roofing Paper: 2-Layers D 224 89 Type II Asphalt Roll Roofing (Organic Felt).

REINFORCEMENT:

A. The minimum covering measured from the surface of the concrete to the face of any reinforcing bar shall be as follows, except as shown otherwise:

1. Deck Slabs
   A. Top Bars -- 1½"
   B. Bottom Bars -- 1¼" except as noted otherwise
2. For prestressed concrete girders see Prestressed Concrete Girder Details.
3. Abutments and retaining walls -- 2"
4. Concrete cast against and permanently exposed to earth -- 3"

B. Reinforcing bars shall be detailed in accordance with A.C.I. Manual of Standard Practice for Detailing Reinforced Concrete Highway Structures unless noted otherwise.

C. Minimum clear spacing between parallel bars shall be 1½ times the diameter of the bars (for non-bundled bars). But in no case shall the clear distance between the bars be less than 1½ times the maximum size of the course aggregate.

D. All dimensions relating to reinforcing bars (e.g. spacing of bars, etc.) are to centers of bars unless noted otherwise.

E. Reinforcing bars shall be securely tied at all intersections and lap splices except where the spacing of intersections is less than one foot in each direction, in which case alternate intersections shall be tied.

F. In general, splicing of reinforcing steel, where permitted, shall be done in accordance with Section 602--Reinforcing Steel, of the Standard Specifications.

GIRDER BEARINGS, HINGE BLOCKS AND CREEP BLOCKS:

A. Girder concrete seats receiving elastomeric pads, hinge blocks and creep blocks shall be poured monolithically with supporting structure. Top of concrete seats receiving elastomeric bearing pads shall be finished with a steel trowel to a smooth level surface to the elevation shown on the plans. Grind down high spots as needed to provide an even bearing surface to 1/16"± tolerance.

B. Elastomeric Pads -- To prevent displacement, the bottom of bridge bearing pads shall be secured to the concrete seats witn adhesives approved by the Engineer.

CONSTRUCTION NOTES:

A. See Standard Specifications and Special Provisions.

B. In general, top of concrete deck slab shall be constructed to follow the roadway vertical and horizontal curves and superelevations.

C. Except as noted otherwise, all vertical dimensions are measured plumb.

D. The Contractor shall verify all site conditions and not rely upon these plans for access road or stream location, etc. Conditions may differ from those shown due to work performed by other contracts.

E. The Contractor shall coordinate his work with that performed concurrently on adjacent sites.

F. The Contractor shall verify the location of all utility lines and notify the respective owners before commencing work on excavation.

G. For concrete finish see Standard Specifications and Special Provisions.

H. Construction joints may be relocated or additional ones added subject to the approval of the Engineer.

I. Unless noted otherwise, all exposed concrete edges shall be chamfered ¾".

GENERAL:

A. All items noted incidental will not be paid for separately.

B. Standard detail drawings refer to all structures in general, except for modifications as may be required for special conditions. For such modifications refer to the corresponding detailed drawings.

FOUNDATION:

A. For boring logs and their locations see Sheet #S8 and #S9.

B. General:

1. The Contractor should be aware that conditions exist where the excavation of a footing located lower than an adjacent higher elevation footing may undermine the higher footing. The Contractor shall consider constructing and backfilling of the lower footing prior to starting excavation on the higher located footing.
2. The pay limits for excavation shown on Sheet #S17 should not be considered as indicative of actual excavation requirements.

C. For specific soil bearing capacity of spread footings of retaining walls and abutments see Sheet #S4.

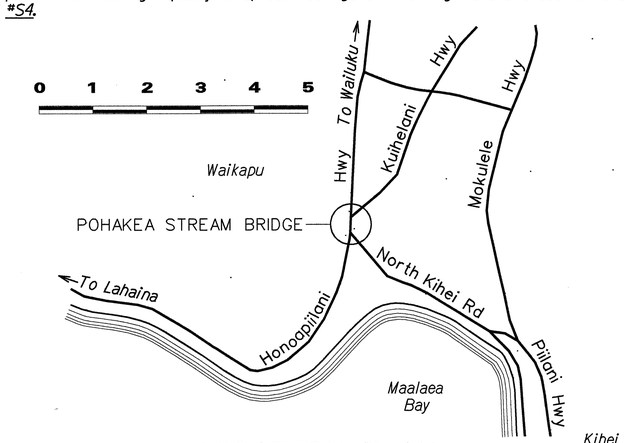

LOCATION PLAN

STATE OF HAWAII
DEPARTMENT OF TRANSPORTATION
HIGHWAYS DIVISION

POHAKEA STREAM BRIDGE
INDEX to DRAWINGS, GENERAL NOTES and LOCATION PLAN
HONOAPIILANI HIGHWAY WIDENING
North Kihei Road to Kuihelani Highway
Fed. Aid Proj. No. BR-NH-030-1(24)

Scale: As Noted — Date: Dec. 1998

SHEET No. S1 OF 37 SHEETS

ORIGINAL PLAN			DATE
	SURVEY PLOTTED BY		
	DRAWN BY	KSG	DEC. 1998
	TRACED BY		
NOTE BOOK	TYPED BY	SK	DEC. 1998
	DESIGNED BY	SK	DEC. 1998
	QUANTITIES BY	DOO	DEC. 1998
N:\phnk_s1.dgn	CHECKED BY		

FED. ROAD DIST. NO.	STATE	FED. AID PROJ. NO.	FISCAL YEAR	SHEET NO.	TOTAL SHEETS
HAWAII	HAW.	BR-NH-030-1(24)	2000	50	139

SYMBOLS AND ABBREVIATIONS

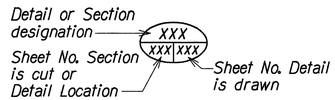

(XX) - ℄ Bearing Abutment Seat Line

◐ - Boring No. & Designation

Abut.	Abutment
AC	Asphaltic Concrete
Adj.	Adjacent
Alt.	Alternate
Approx.	Approximate
Az.	Azimuth
℄	Baseline
Bal.	Balance
Bet.	Between
B.F.	Both faces
B.F.E.	Bottom Footing Elevation
Bk.	Back
Blt.	Bolt
Bm.	Beam
B, Bot., Bott.	Bottom
Br.	Bridge
Brg., Brgs.	Bearing, Bearings
B.V.C.	Beginning of Vertical Curve
℄	Center Line
Cant.	Cantilever
C.B.	Creep Block
C.F.	Cubic Feet
CiP	Cast in Place
C.I.P.	Cast Iron Pipe
Cl., Clr.	Clear
Col.	Column
Conc.	Concrete
Conn.	Connection
Const.	Construction
Cont.	Continuous
CRM	Cement Rubble Masonry
C.Y., Cu. Yd.	Cubic Yards
Det.	Detail
Dia., ø	Diameter
Dim.	Dimension
Dwg., Dwgs.	Drawing, Drawings
EA, Ea., ea.	Each
E.F.	Each Face
Elec.	Electrical
El., Elev.	Elevation
Emb.	Embankment
E.P.	Edge of Pavement
Eq.	Equal
Est.	Estimated
E.W.	Each Way
Exc.	Excavation
Exist.	Existing
Exp., (E)	Expansion
Ext.	Exterior
(F)	Fixed
F'	Specified Strength of Concrete
F'	Strength of Concrete at Time of Initial Prestress
F.F.	Front Face or Far Face
Fig.	Figure
Fin.	Finish
Fin. Gr.	Finish Grade
Ftg., Foot'g	Footing
Ga.	Gage, Gauge
Galv.	Galvanized
Gir., G	Girder
G.R.P.	Grouted Rubble Paving
Gr.	Grade
Grd.	Ground
(H)	Hinge
H.B.	Hinge Block
Horiz.	Horizontal
HS	High Strength
Ht.	Height
Hwy.	Highway
I.B.	Inbound
I.F.	Inside Face
In.	Inch
Int.	Interior
Inv.	Invert
Jt.	Joint
L	Length
LBS., lb., lbs.	Pound, Pounds
L.F., Lin. Ft.	Linear Feet
Lg.	Long
Longit.	Longitudinal
L.S.	Lump Sum
Lt.	Left
Ltg. Std.	Lighting Standard
Max.	Maximum
Mech.	Mechanical
Min.	Minimum
Misc.	Miscellaneous
N	North
N.B.	Northbound
N.F.	Near Face
No., #	Number
N.T.S.	Not To Scale
O.B.	Outbound
o.c.	On Center
O.G.	Outside Girder
Opn'g	Opening
o/s, O/S	Offset
P.B.	Pull Box
P.C.	Point of Curvature
P.C.C.	Portland Cement Concrete
Perf.	Perforated
PG-( )	Prestressed Girder-(Type)
PL	Plate
P/S	Prestressed Strands
Pvmt.	Pavement
R	Radius
Rdwy	Roadway
Ref.	Reference
Reinf.	Reinforcement
Ret.	Retaining
Req'd	Required
R.F.	Rear Face
Rt.	Right
R/W	Right Of Way
S	South
S.B.	Southbound
Sect.	Section
SF	Square Feet
Shldr.Sht.	Sheet
Spc.	Space
Spcd.	Spaced
Spcg.	Spacing
Spec.	Specification
Sprd.	Spread
Sta.	Station
Std.	Standard
Stirr.	Stirrup
Str.	Straight
Struct.	Structural
Symm.	Symmetrical
T	Top
Temp.	Temporary
Thk.	Thick, Thickness
T.O.D.	Top Of Deck
Tot.	Total
Transv.	Transverse
Typ.	Typical
Var.	Varies
V.C.	Vertical Curve
Vert.	Vertical
W	West
w/	With
W.W.	Wingwall

ESTIMATED QUANTITIES

ITEM NO.	ITEM DESCRIPTION	UNIT	QUANTITY
201.0101	Removal of Large Existing Trees in Stream Bed	Each	2
201.0200	Clearing and Grubbing of Existing Stream Bed	L.S.	L.S.
202.0440	Removal of Existing Bridge Structures	L.S.	L.S.
206.6100	Structure Excavation for Bridge Structures and Wingwalls	Cu. Yds.	4,430.0
206.6200	Structure Excavation for Retaining Walls	Cu. Yds.	878.0
206.7100	Structure Backfill for Bridge Structures and Wingwalls	Cu. Yds.	3,501.0
206.7200	Structure Backfill for Retaining Walls	Cu. Yds.	811.0
206.8100	Filter Material for Abutments and Wingwalls	Cu. Yds.	158.3
206.8200	Filter Material for Retaining Walls	Cu. Yds.	27.2
207.0200	Channel Excavation	Cu. Yds.	1,835.0
503.1100	Concrete in Retaining Walls (except Footings)	L.S.	L.S.
503.1200	Concrete in Bridge Structures (except Footings)	L.S.	L.S.
503.1300	Concrete in Footings for Bridge Structures	L.S.	L.S.
503.1400	Concrete in Footings for Retaining Walls	L.S.	L.S.
504.2200	Type II Prestressed Concrete Girders	Lin. Ft.	1,251.0
507.3400	Metal Bridge Railing w/Posts - Bikeway Metal Railing	Lin. Ft.	147.0
507.6000	Concrete Bridge Railing - Parapets and End Posts	Lin. Ft.	390.0
602.0100	Reinforcing Steel in Retaining Walls	L.S.	L.S.
602.0200	Reinforcing Steel in Bridge Structures and Wingwalls	L.S.	L.S.
606.3100	Type 3 Thrie Beam Guardrail w/Posts	Lin. Ft.	200.0
612.0200	Grouted Rubble Paving (GRP) Gutter	Cu. Yds.	7.0
612.0300	Grouted Rubble Paving (GRP) Slope Protection	Cu. Yds.	42.0

ORIGINAL PLAN	SURVEY PLOTTED BY KSG DATE
	DRAWN BY KSG " DEC. 1998
NOTE BOOK	TRACED BY SK " DEC. 1998
	DESIGNED BY SK " DEC. 1998
s2.dgn	QUANTITIES BY SK " DEC. 1998
	CHECKED BY DKO " DEC. 1998

STATE OF HAWAII
DEPARTMENT OF TRANSPORTATION
HIGHWAYS DIVISION

POHAKEA STREAM BRIDGE
SYMBOLS and ABBREVIATIONS
and ESTIMATED QUANTITIES
HONOAPIILANI HIGHWAY WIDENING
North Kihei Road to Kuihelani Highway
Fed. Aid Proj. No. BR-NH-030-1(24)

Scale: As Noted Date: Dec. 1998

SHEET No. S2 OF 37 SHEETS

FED. ROAD DIST. NO.	STATE	FED. AID PROJ. NO.	FISCAL YEAR	SHEET NO.	TOTAL SHEETS
HAWAII	HAW.	BR-NH-030-1(24)	2000	51	139

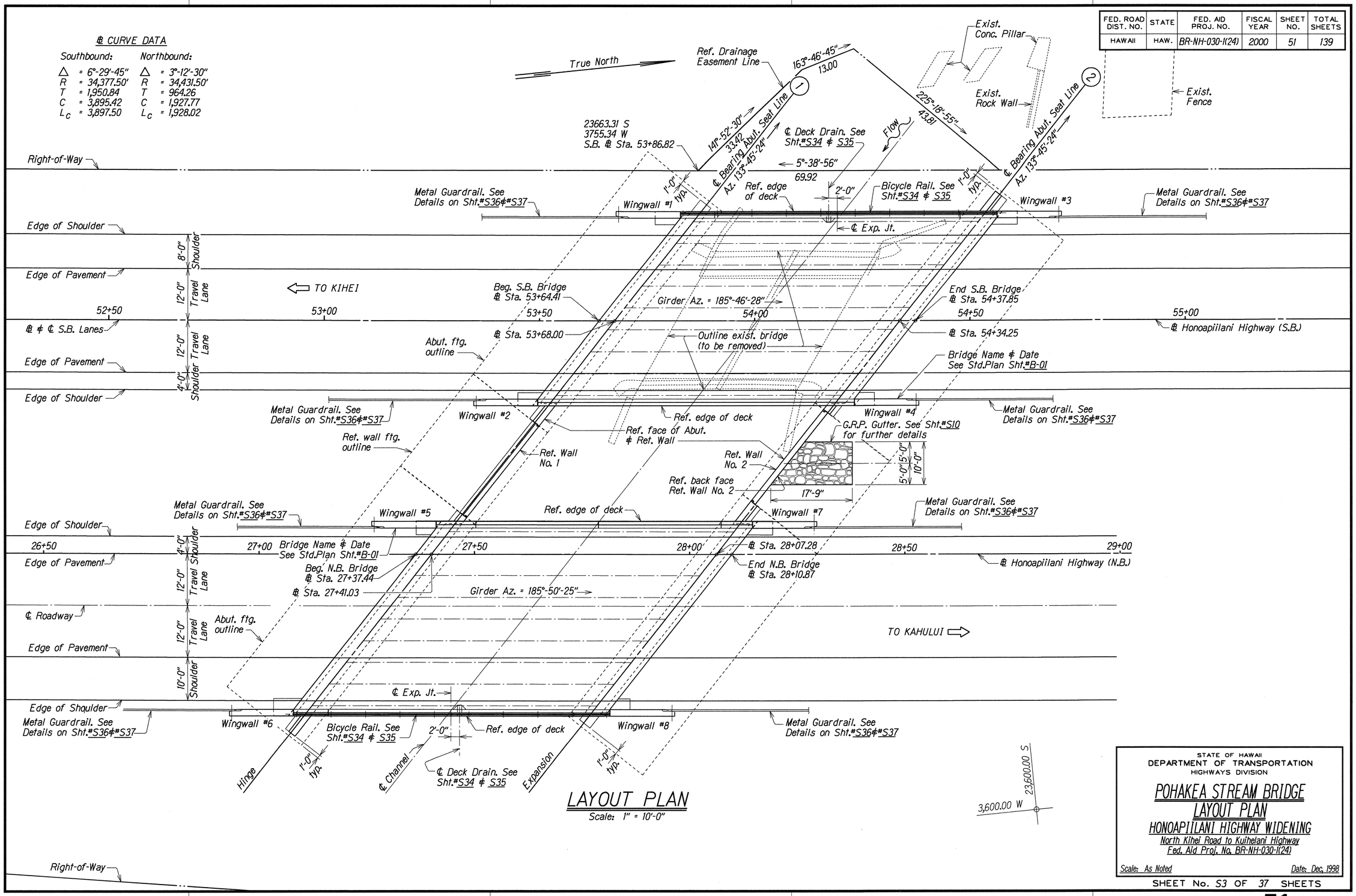

LAYOUT PLAN

Scale: 1" = 10'-0"

ORIGINAL PLAN		
	SURVEY PLOTTED BY	KSG
	DRAWN BY	
	TRACED BY	SK
NOTE BOOK	DESIGNED BY	SK
	QUANTITIES BY	DDD
	CHECKED BY	

	DATE
	DEC. 1998
	DEC. 1998
	DEC. 1998
	DEC. 1998

STATE OF HAWAII
DEPARTMENT OF TRANSPORTATION
HIGHWAYS DIVISION

POHAKEA STREAM BRIDGE
LAYOUT PLAN
HONOAPIILANI HIGHWAY WIDENING

North Kihei Road to Kuihelani Highway
Fed. Aid Proj. No. BR-NH-030-1(24)

Scale: As Noted — Date: Dec. 1998

SHEET No. S3 OF 37 SHEETS

FED. ROAD DIST. NO.	STATE	FED. AID PROJ. NO.	FISCAL YEAR	SHEET NO.	TOTAL SHEETS
HAWAII	HAW.	BR-NH-030-1(24)	2000	52	139

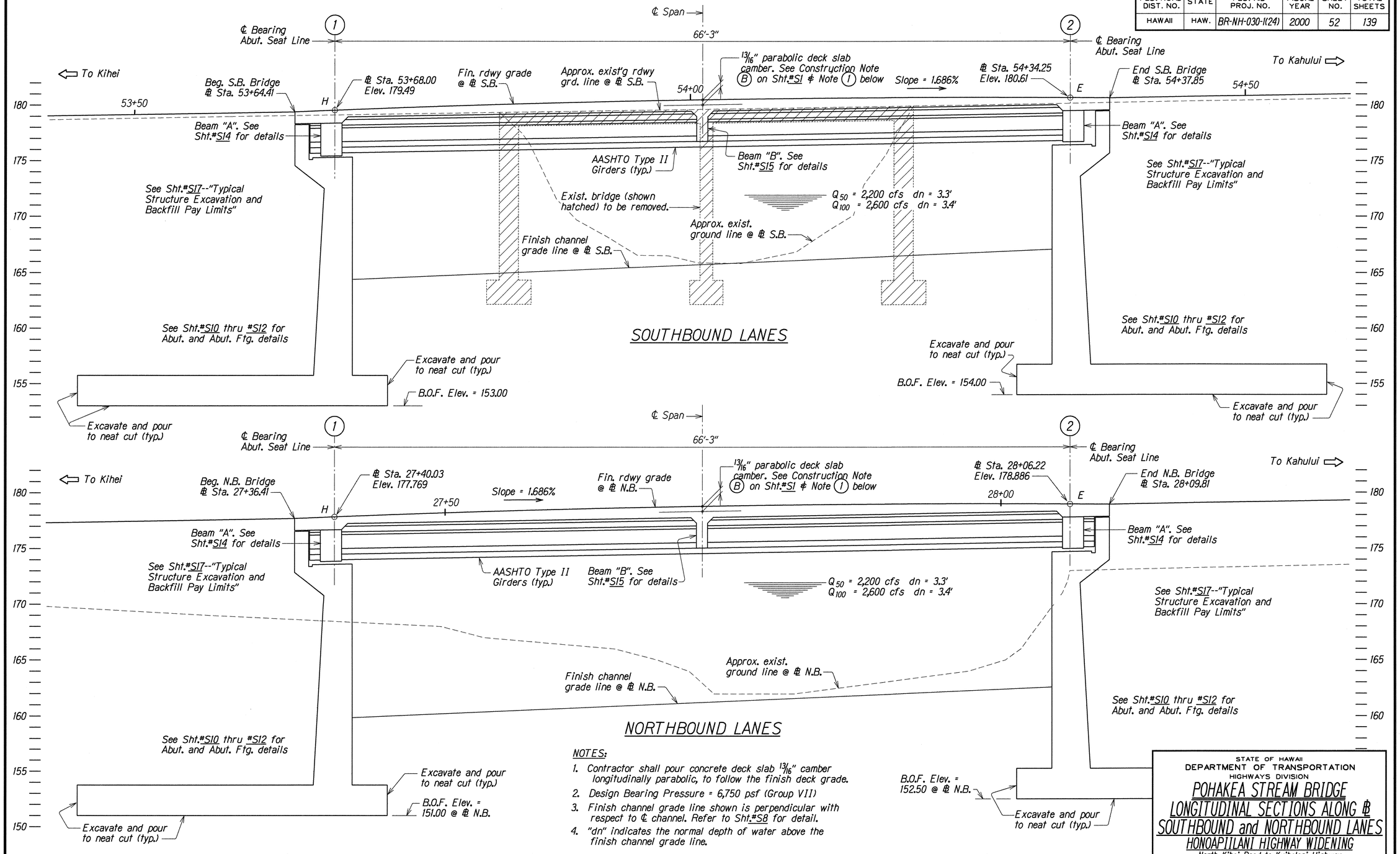

NOTES:

1. Contractor shall pour concrete deck slab 13/16" camber longitudinally parabolic, to follow the finish deck grade.
2. Design Bearing Pressure = 6,750 psf (Group VII)
3. Finish channel grade line shown is perpendicular with respect to ℄ channel. Refer to Sht.#S8 for detail.
4. "dn" indicates the normal depth of water above the finish channel grade line.

LONGITUDINAL SECTIONS ALONG BASELINE

Scale: 1/4" = 1'-0"

STATE OF HAWAII
DEPARTMENT OF TRANSPORTATION
HIGHWAYS DIVISION

POHAKEA STREAM BRIDGE
LONGITUDINAL SECTIONS ALONG ⌀ SOUTHBOUND and NORTHBOUND LANES
HONOAPIILANI HIGHWAY WIDENING
North Kihei Road to Kuihelani Highway
Fed. Aid Proj. No. BR-NH-030-1(24)

Scale: As Noted Date: Dec. 1998

SHEET No. S4 OF 37 SHEETS

ORIGINAL PLAN	SURVEY PLOTTED BY	KSG	DATE DEC. 1998
	DRAWN BY		
	TRACED BY		
NOTE BOOK	DESIGNED BY	SK	DEC. 1998
	QUANTITIES BY	SK	DEC. 1998
s4pohok_s4.dgn	CHECKED BY	DCO	DEC. 1998

FED. ROAD DIST. NO.	STATE	FED. AID PROJ. NO.	FISCAL YEAR	SHEET NO.	TOTAL SHEETS
HAWAII	HAW.	BR-NH-030-1(24)	2000	53	139

Legend: CB = Creep Block
HB = Hinge Block

Notes:
1. For girder lengths see Sht.#S33
2. Girder spacing shown are distance normal to girder.
3. For typical Beam "A" details see Sht.#S14.
4. For typical Beam "B" details see Sht.#S15.

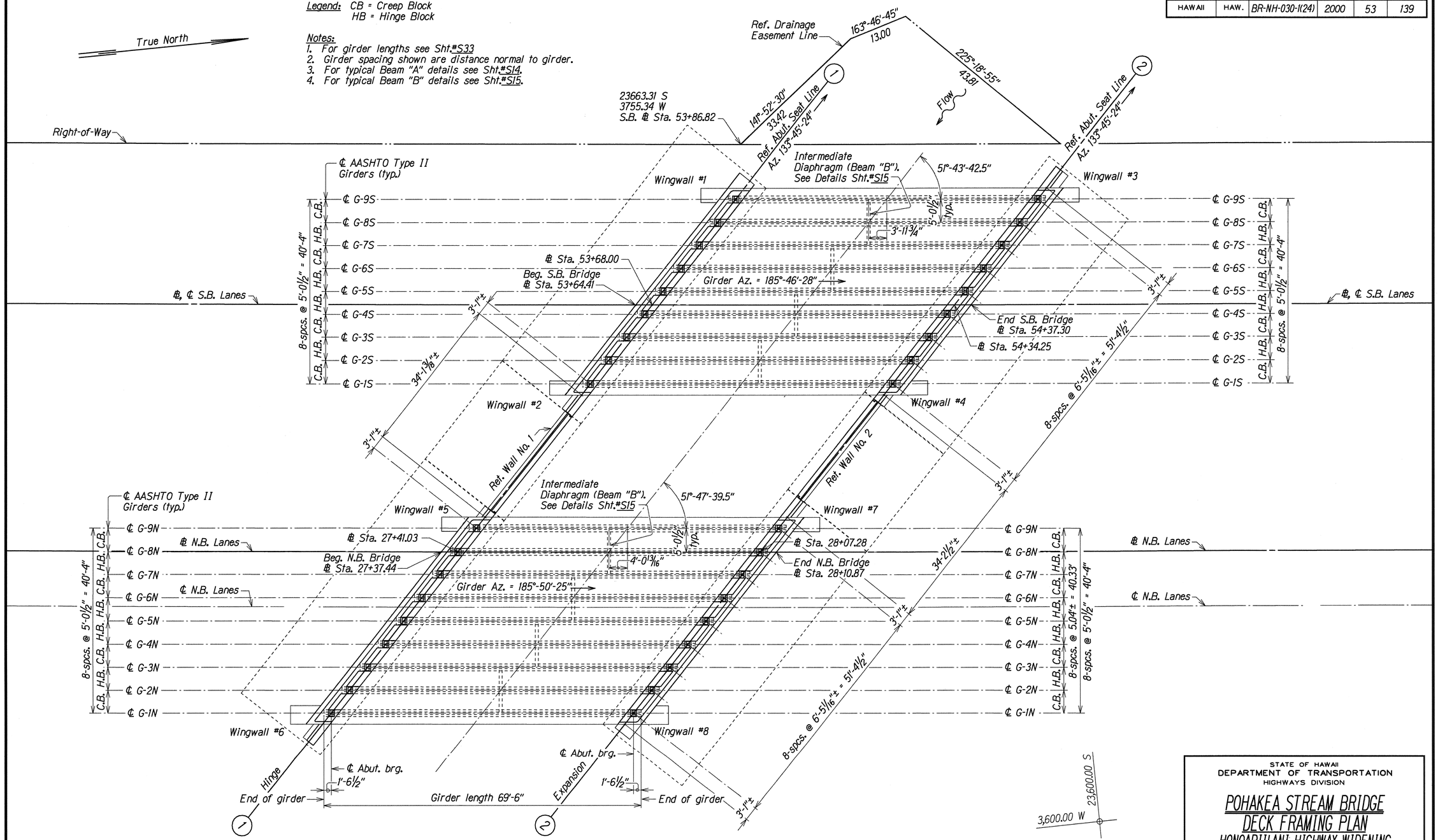

DECK FRAMING PLAN

Scale: 1" = 10'-0"

ORIGINAL PLAN	SURVEY PLOTTED BY		DATE
	DRAWN BY	KSG	DEC 1998
	TRACED BY	SK	DEC 1998
NOTE BOOK	DESIGNED BY	SK	DEC 1998
N/A	QUANTITIES BY	DCO	DEC 1998
	CHECKED BY	DCO	

STATE OF HAWAII
DEPARTMENT OF TRANSPORTATION
HIGHWAYS DIVISION

POHAKEA STREAM BRIDGE
DECK FRAMING PLAN
HONOAPIILANI HIGHWAY WIDENING

North Kihei Road to Kuihelani Highway
Fed. Aid Proj. No. BR-NH-030-1(24)

Scale: As Noted — Date: Dec. 1998

SHEET No. S5 OF 37 SHEETS

FED. ROAD DIST. NO.	STATE	FED. AID PROJ. NO.	FISCAL YEAR	SHEET NO.	TOTAL SHEETS
HAWAII	HAW.	BR-NH-030-1(24)	2000	54	139

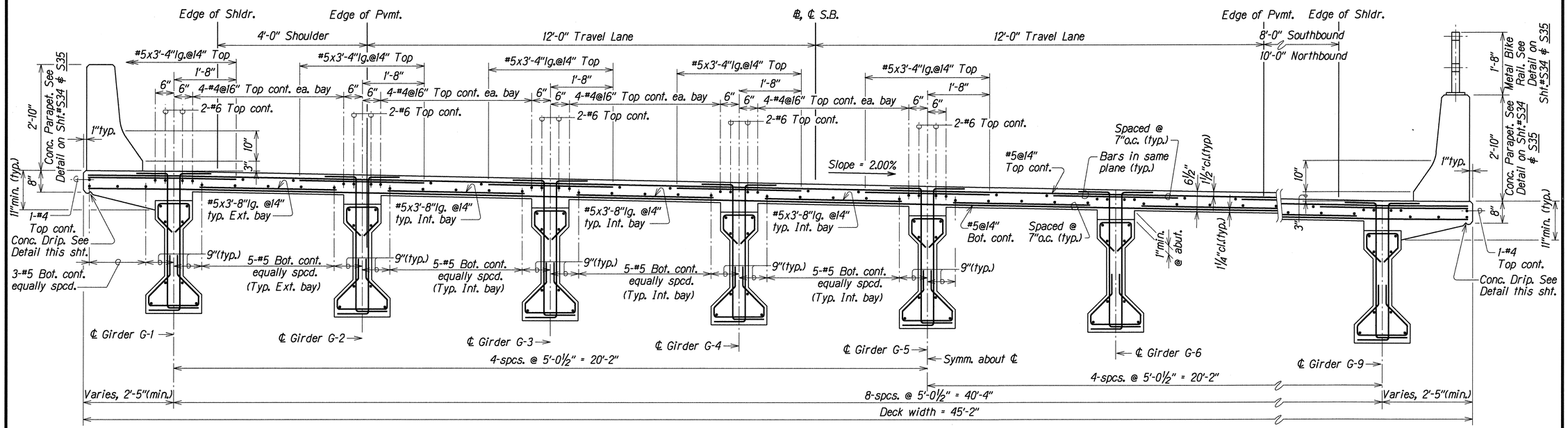

NORMAL DECK SECTION

(S.B. SHOWN--N.B. SIMILAR)
Scale: ¾" = 1'-0"

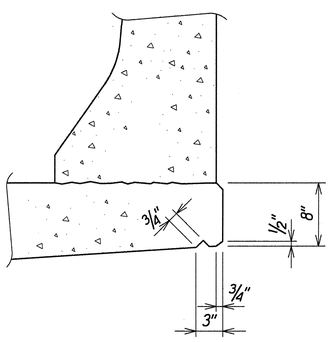

TYPICAL DRIP DETAIL

Scale: 1½" = 1'-0"

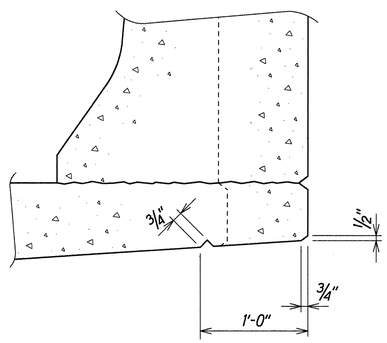

DRIP DETAIL AT LIGHT STANDARD

Scale: 1½" = 1'-0"

Notes:
1. See Conc. Girder Details on Sht.#S33.
2. Concrete Deck Slope (2%), shown typical, to match the Slope of the Roadway Section.
3. Girder spacing shown are distance normal to center line of girders.

ORIGINAL PLAN		
SURVEY PLOTTED BY	KSG	DATE
DRAWN BY		DEC. 1998
TRACED BY	SK	DEC. 1998
DESIGNED BY	SK	DEC. 1998
QUANTITIES BY	DCO	DEC. 1998
CHECKED BY		
NOTE BOOK		

STATE OF HAWAII
DEPARTMENT OF TRANSPORTATION
HIGHWAYS DIVISION

POHAKEA STREAM BRIDGE
NORMAL DECK SECTION
HONOAPIILANI HIGHWAY WIDENING
North Kihei Road to Kuihelani Highway
Fed. Aid Proj. No. BR-NH-030-1(24)

Scale: As Noted — Date: Dec. 1998

SHEET No. S6 OF 37 SHEETS

FED. ROAD DIST. NO.	STATE	FED. AID PROJ. NO.	FISCAL YEAR	SHEET NO.	TOTAL SHEETS
HAWAII	HAW.	BR-NH-030-1(24)	2000	55	139

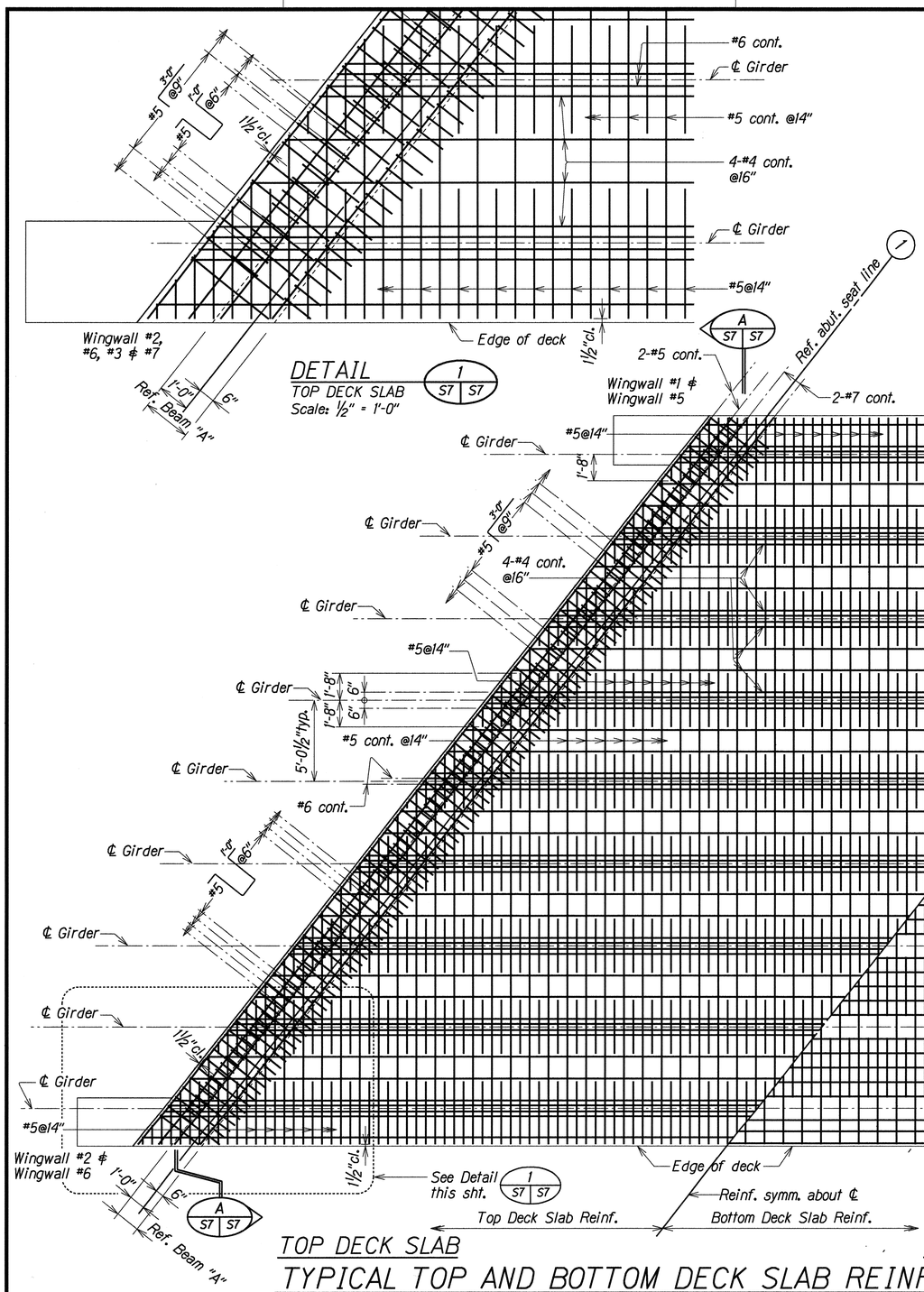

DETAIL 1 (S7 | S7)
TOP DECK SLAB
Scale: ½" = 1'-0"

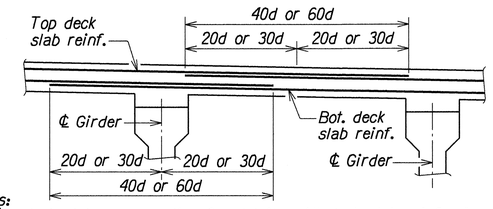

Notes:
1. See deck slab cross section for details. All deck slab reinforcing bar splices shall lap 40 bar diameters (40d), unless noted otherwise. If splices are required, they shall be done at locations shown above. For Gr. 60 reinforcing bar, lap length shall increase by 50% more than shown.
2. No more than one-third of the total main reinforcement shall be spliced at sections normal to the axis of the member.

DECK SLAB REINFORCING LOCATION
Not to Scale

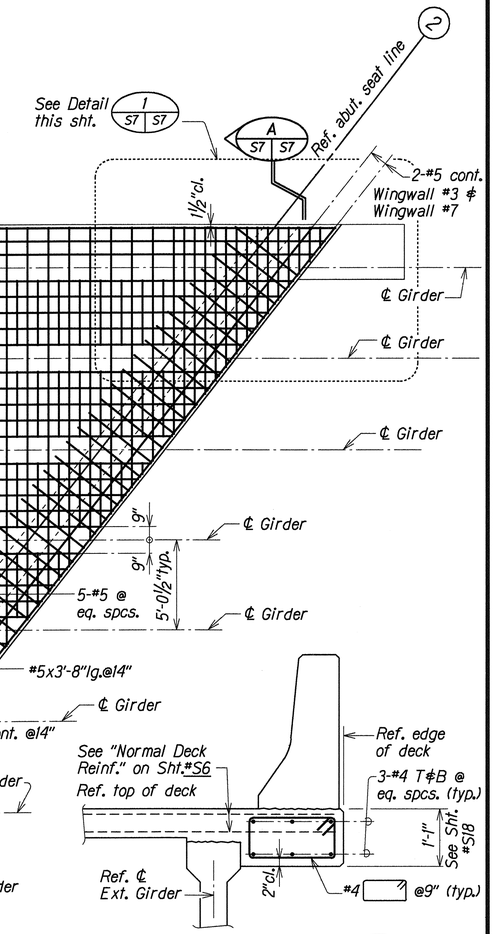

TYPICAL SECTION A (S7 | S7)
Scale: ¾" = 1'-0"

TOP DECK SLAB — BOTTOM DECK SLAB

TYPICAL TOP AND BOTTOM DECK SLAB REINFORCING DETAIL
(SOUTHBOUND AND NORTHBOUND LANES)
Scale: ¼" = 1'-0"

ORIGINAL PLAN			
NOTE BOOK	SURVEY PLOTTED BY	KSG	DATE DEC 1998
	DRAWN BY		
	TRACED BY		
	DESIGNED BY	SK	DEC 1998
	REVIEWED BY	SK	DEC 1998
	QUANTITIES BY	DKK	DEC 1998
	CHECKED BY		

STATE OF HAWAII
DEPARTMENT OF TRANSPORTATION
HIGHWAYS DIVISION

POHAKEA STREAM BRIDGE
TYPICAL TOP AND BOTTOM DECK SLAB REINFORCING (SB AND NB)
HONOAPIILANI HIGHWAY WIDENING
North Kihei Road to Kuihelani Highway
Fed. Aid Proj. No. BR-NH-030-1(24)

Scale: As Noted — Date: Dec. 1998

SHEET No. S7 OF 37 SHEETS

FED. ROAD DIST. NO.	STATE	FED. AID PROJ. NO.	FISCAL YEAR	SHEET NO.	TOTAL SHEETS
HAWAII	HAW.	BR-NH-030-1(24)	2000	56	139

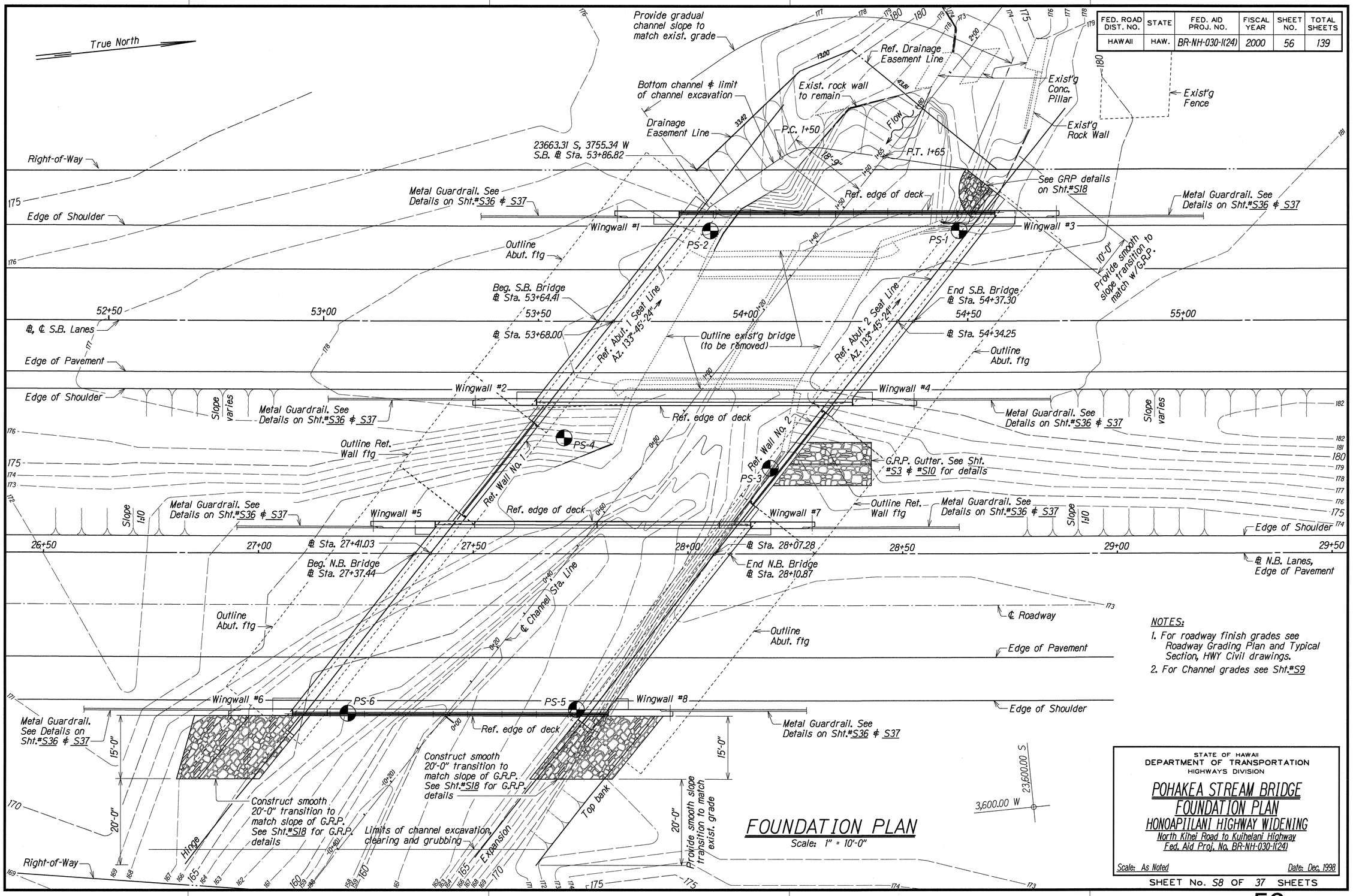

NOTES:

1. For roadway finish grades see Roadway Grading Plan and Typical Section, HWY Civil drawings.
2. For Channel grades see Sht.#S9

FOUNDATION PLAN

Scale: 1" = 10'-0"

ORIGINAL PLAN		
SURVEY PLOTTED BY	KSC	DATE DEC 1998
DRAWN BY		
TRACED BY	SK	DEC 1998
NOTE BOOK	DESIGNED BY	SK	DEC 1998
QUANTITIES BY	SK	DEC 1998
CHECKED BY	DCO	DEC 1998

STATE OF HAWAII
DEPARTMENT OF TRANSPORTATION
HIGHWAYS DIVISION

POHAKEA STREAM BRIDGE
FOUNDATION PLAN
HONOAPIILANI HIGHWAY WIDENING

North Kihei Road to Kuihelani Highway
Fed. Aid Proj. No. BR-NH-030-1(24)

Scale: As Noted — Date: Dec. 1998

SHEET No. S8 OF 37 SHEETS

FED. ROAD DIST. NO.	STATE	FED. AID PROJ. NO.	FISCAL YEAR	SHEET NO.	TOTAL SHEETS
HAWAII	HAW.	BR-NH-030-1(24)	2000	57	139

PS-1

S.B. @ Sta. 54+48 o/s Lt 21'

Firm brown silty clay w/gravel & stones
Split spoon 23 blows/ft.
Very stiff brn. silty clay w/gravel & stones
Split spoon 37 blows/ft.

Split spoon 32 blows/ft.
Very stiff brn. clay w/gravel & stones
Split spoon 75 blows/ft.

Boulders & stones
Split spoon 60 blows/0.4 ft.
Layer of stiff brn. silty clay w/gravel
Gravel & stones
Boulder
Boulder & stones
Split spoon 63 blows/ft.
Very stiff brn. sandy clay
Piston 1000 p.s.i./0.3 ft.
Split spoon 34 blows/ft.
Stiff fine brn. sandy clay
Split spoon 27 blows/ft.
Stiff fine brn. sandy clay w/gravel
Split spoon 26 blows/ft.

PS-2

S.B. @ Sta. 53+90 o/s Lt 21'

Soft brown silty clay w/gravel
Split spoon 10 blows/ft.
Soft brn. silty clay w/cobbles & gravel
Firm brn. silty clay w/cobbles & gravel
Split spoon 18/os-40/0.7 blows/ft.
Stiff brn. silty clay w/stones & gravel
Split spoon 25 blows/ft.
Highly weathered stone & boulders
Stiff brn. silty clay w/gravel & stones
Split spoon 9/0.5-25/0.4 blows/ft.

Stiff brn. silty clay w/gravel
Split spoon 58 blows/ft.
Very stiff brn. silty clay w/tr. of gravel
Very stiff brn. silty clay
Split spoon 111 blows/ft.

PS-3

S.B. @ Sta. 54+04 o/s Rt 34'

Firm brown silty clay w/gravel, stones & boulders
Split spoon 5/0.5-41/0.9 blows/ft.
Very stiff brn. silty clay w/gravel & stones
Split spoon 35 blows/ft.

Split spoon 71 blows/ft.
Very stiff grayish-brn. clay w/gravel & stones
Split spoon 70 blows/ft.
Very stiff brn. silty clay w/gravel & stones
Split spoon 75 blows/ft.
Very stiff brn. silty clay w/tr. of gravel
Split spoon 48 blows/ft.

PS-4

S.B. @ Sta. 53+56 o/s Rt 27'

Stiff brown sandy clay w/gravel
Split spoon 21 blows/ft.
Boulder
Split spoon 62 blows/ft.
Hard-packed gravel, stones & stiff grayish clay
Split spoon 15/0.5-79/0.5-8.5/0.2 blows/ft.
Gravel, stones & boulder
Boulder
Split spoon 87 blows/ft.
Very stiff brn. sandy clay
Stiff brn. sandy clay
Split spoon 20 blows/ft.
Stiff brn. sandy clay w/tr. of gravel
Split spoon 21 blows/ft.

Piston 400 p.s.i.
Stiff fine brn. silty clay
Split spoon 21 blows/ft.
Stiff fine brn. sandy clay
Split spoon 22 blows/ft.
Stiff fine brn. sandy clay w/tr. of gravel
Split spoon 22 blows/ft.

PS-5

S.B. @ Sta. 53+59 o/s Rt 90'

Soft brown silty clay w/gravel
Split spoon 7 blows/ft.
Soft brn. silty clay w/gravel & stones
Boulder
Split spoon 21 blows/ft.
Firm brn. silty clay w/gravel
Firm brn. silty clay & stones
Split spoon 15 blows/0.1 ft.
Boulder
Gravel & stones
Boulder
Split spoon 30 blows/ft.
Stiff brn. silty clay w/gravel
Boulder
Stiff brn. silty clay w/gravel
Split spoon 23 blows/ft.
Stiff brn. silty clay w/gravel & stones
Split spoon 101 blows/ft.

Split spoon 21 blows/ft.

Stiff brn. silty clay w/gravel
Split spoon blows/ft.

PS-6

S.B. @ Sta. 53+06 o/s Rt 91'

Loose brown clay w/gravel, stones & boulders
Boulder
Split spoon 32 blows/ft.
Gravel, stones & boulders
Split spoon 20/0.5-35/0.2 blows/ft.
Firm brn. silty clay w/gravel & stones
Split spoon 89 blows/ft.
Very stiff fine brn. silty clay
Split spoon 39 blows/ft.
Stiff stiff brn. silty clay w/tr. of gravel
Split spoon 45 blows/ft.

Split spoon 27 blows/ft.
Stiff fine brn. silty clay

BORING LOG

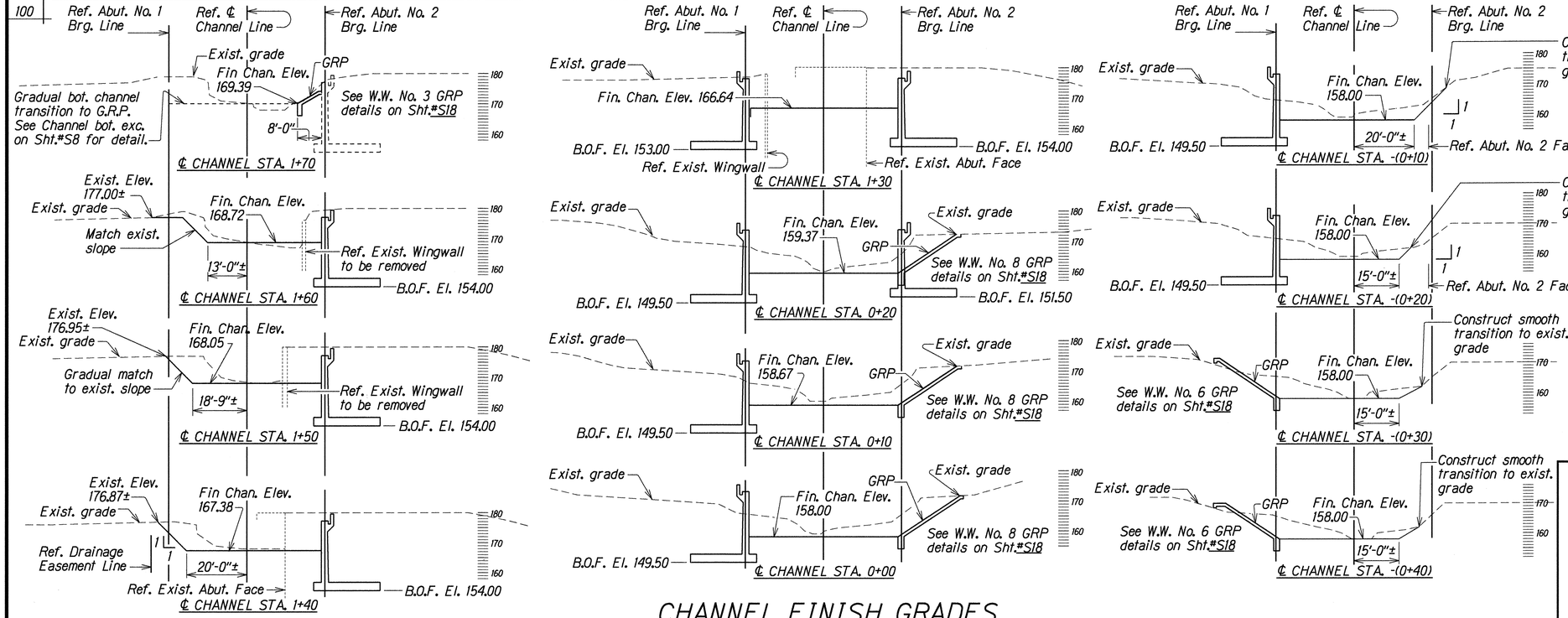

CHANNEL FINISH GRADES

Not to Scale

NOTES:
1. Refer to "Foundation Plan" on Sht.#S8 for ℄ Channel Station Line.
2. Refer to "Elevations at Wingwalls" on Sht.#S18 for further details.
3. Channel Finish Grades shown are drawn ⊥ to ℄ Channel.

ORIGINAL PLAN	SURVEY PLOTTED BY	KSC	DATE
	DRAWN BY		DEC 1998
	TRACED BY	SK	DEC 1998
NOTE BOOK	DESIGNED BY	SK	DEC 1998
	QUANTITIES BY	DCO	DEC 1998
	CHECKED BY		

STATE OF HAWAII
DEPARTMENT OF TRANSPORTATION
HIGHWAYS DIVISION

POHAKEA STREAM BRIDGE
BORING LOGS and
CHANNEL FINISH GRADES
HONOAPIILANI HIGHWAY WIDENING
North Kihei Road to Kuihelani Highway
Project No. BR-NH-030-1(24)

Scale: As Noted — Date: Dec. 1998

SHEET No. S9 OF 37 SHEETS

FED. ROAD DIST. NO.	STATE	FED. AID PROJ. NO.	FISCAL YEAR	SHEET NO.	TOTAL SHEETS
HAWAII	HAW.	BR-NH-030-1(24)	2000	58	139

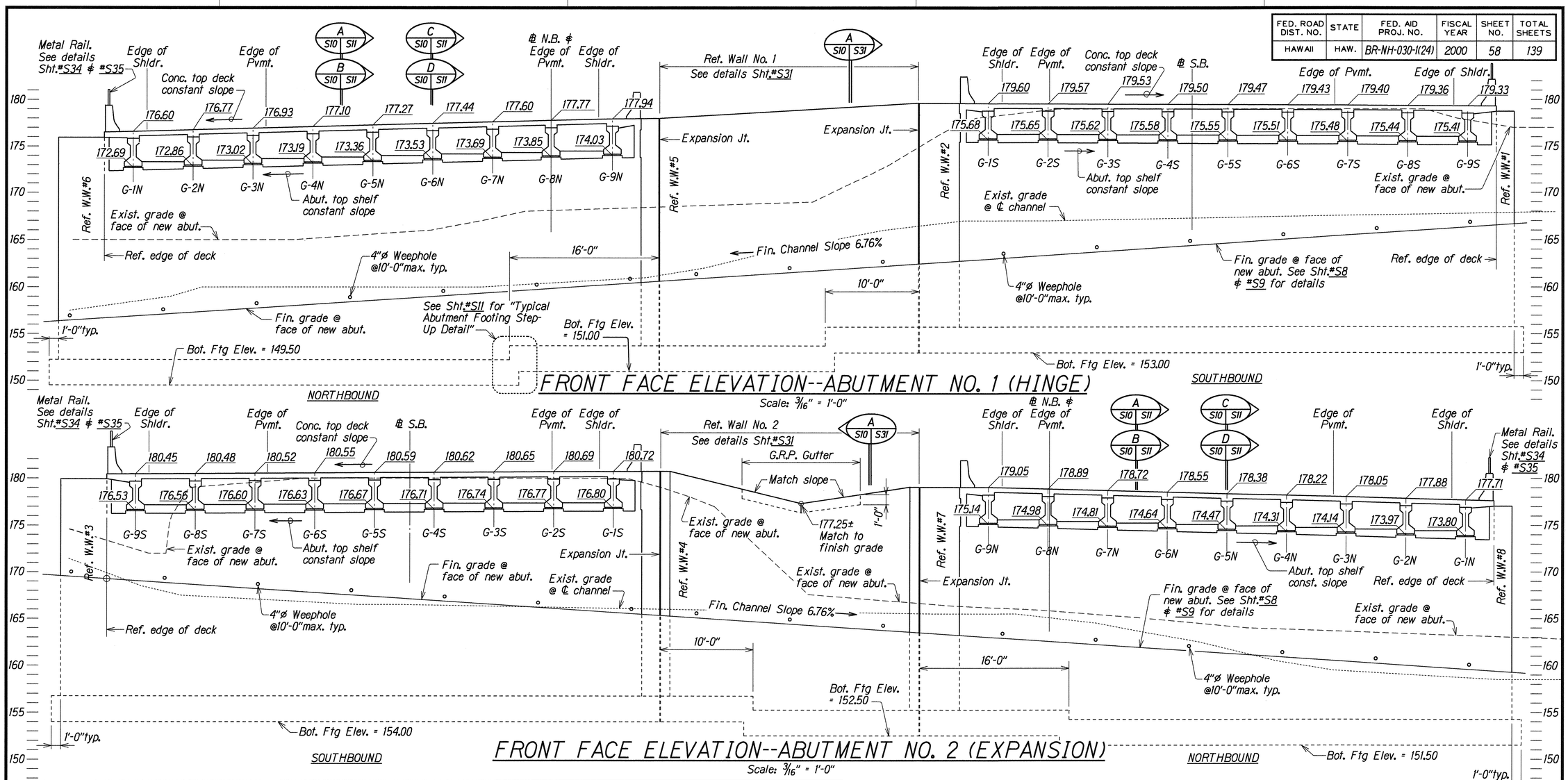

CONCRETE DECK, SEAT AND SHELF ELEVATION SCHEDULE

SOUTHBOUND ABUTMENT						
Abutment	#1 (Hinge)			#2 (Expansion)		
Girder Mark	Deck	Seat	Shelf	Deck	Seat	Shelf
G-1S	179.60	175.68	175.41	180.72	176.80	176.53
G-2S	179.57	175.65	175.38	180.69	176.77	176.50
G-3S	179.53	175.62	175.35	180.65	176.74	176.47
G-4S	179.50	175.58	175.31	180.62	176.71	176.44
G-5S	179.47	175.55	175.28	180.59	176.67	176.40
G-6S	179.43	175.51	175.24	180.55	176.63	176.36
G-7S	179.40	175.48	175.21	180.52	176.60	176.33
G-8S	179.36	175.44	175.17	180.48	176.56	176.29
G-9S	179.33	175.41	175.14	180.45	176.53	176.26

NORTHBOUND ABUTMENT						
Abutment	#1 (Hinge)			#2 (Expansion)		
Girder Mark	Deck	Seat	Shelf	Deck	Seat	Shelf
G-1N	176.60	172.69	172.42	177.71	173.80	173.53
G-2N	176.77	172.86	172.59	177.88	173.97	173.70
G-3N	176.93	173.02	172.75	178.05	174.14	173.87
G-4N	177.10	173.19	172.92	178.22	174.31	174.04
G-5N	177.27	173.36	173.09	178.38	174.47	174.20
G-6N	177.44	173.53	173.26	178.55	174.64	174.37
G-7N	177.60	173.69	173.42	178.72	174.81	174.54
G-8N	177.77	173.85	173.58	178.89	174.98	174.71
G-9N	177.94	174.03	173.76	179.05	175.14	174.87

ORIGINAL PLAN	SURVEY PLOTTED BY KSG DATE DEC. 1998
	DRAWN BY . . . .
	TRACED BY DEC. 1998
NOTE BOOK	DESIGNED BY DEC. 1998
	QUANTITIES BY SK DEC. 1998
sp0hik_s10.dgn	CHECKED BY DKO DEC. 1998

STATE OF HAWAII
DEPARTMENT OF TRANSPORTATION
HIGHWAYS DIVISION

POHAKEA STREAM BRIDGE
FRONT FACE ELEVATION--ABUTMENT NO. 1 and NO. 2
HONOAPIILANI HIGHWAY WIDENING
North Kihei Road to Kuihelani Highway
Fed. Aid Proj. No. BR-NH-030-1(24)

Scale: As Noted Date: Dec. 1998

SHEET No. S10 OF 37 SHEETS

FED. ROAD DIST. NO.	STATE	FED. AID PROJ. NO.	FISCAL YEAR	SHEET NO.	TOTAL SHEETS
HAWAII	HAW.	BR-NH-030-1(24)	2000	59	139

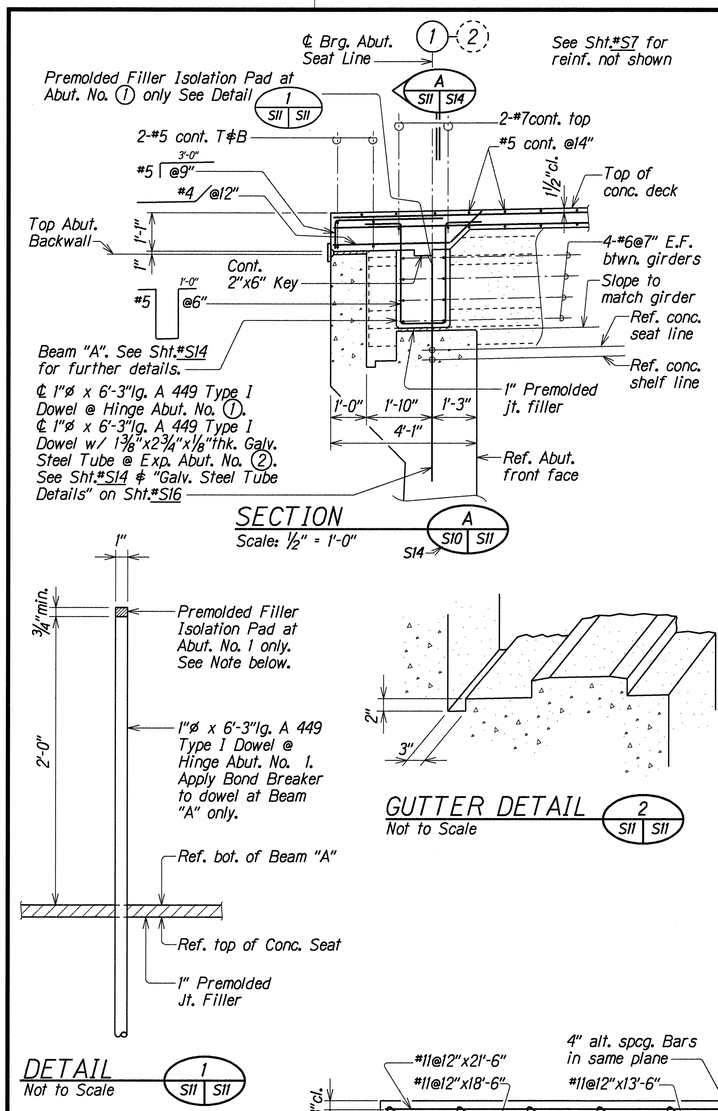

SECTION A S10 S11
Scale: ½" = 1'-0"
S14

DETAIL 1 S11 S11
Not to Scale

GUTTER DETAIL 2 S11 S11
Not to Scale

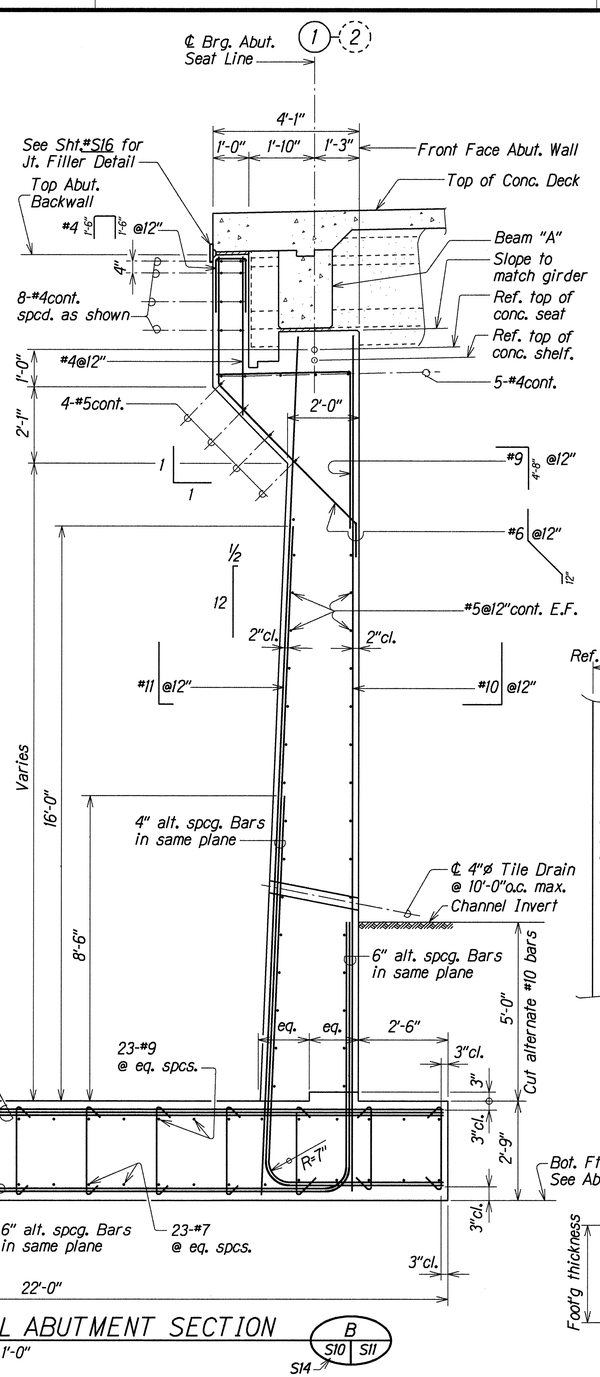

TYPICAL ABUTMENT SECTION B S10 S11
Scale: ½" = 1'-0"
S14

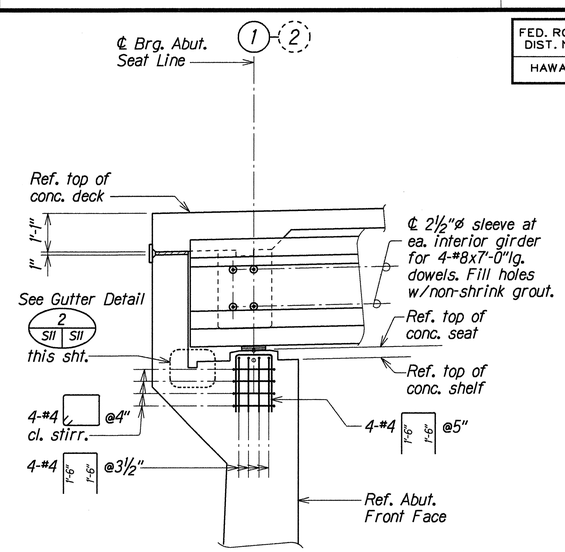

SECTION C S10 S11
Scale: ½" = 1'-0"

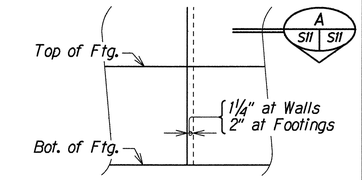

PARTIAL ELEVATION

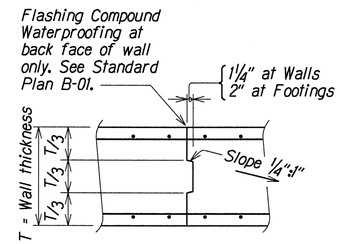

SECTION A S11 S11
Scale: ½" = 1'-0"

TYPICAL CONSTRUCTION JOINT DETAIL
Scale: ½" = 1'-0"

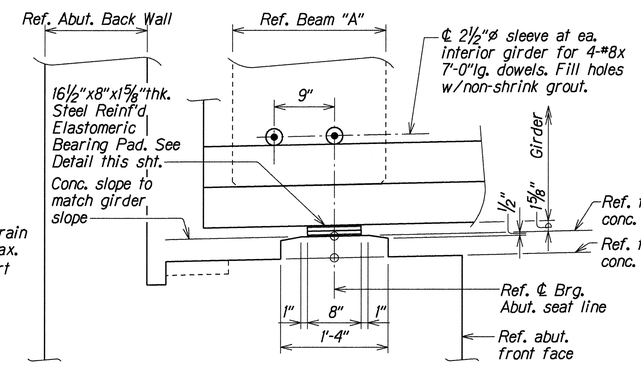

SECTION D S10 S11
Not to Scale

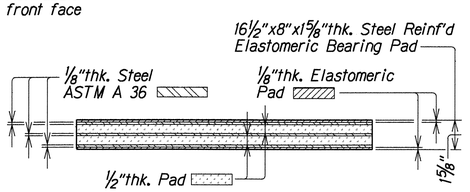

ELASTOMERIC BEARING PAD DETAIL
Not to Scale

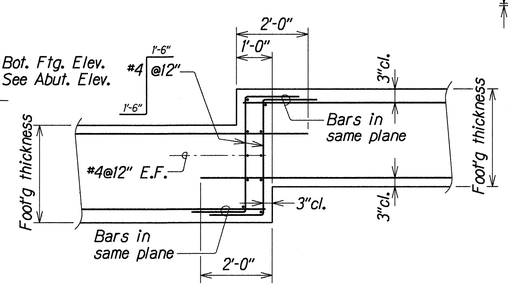

TYPICAL ABUTMENT FOOTING STEP-UP DETAIL
Scale: ½" = 1'-0"

NOTES:

1. Premolded Filler Isolation Pad shall be of PVC or metal sturdy enough to support concrete pour and shall be securely fastened to dowel prior to concrete pour.
2. Elastomeric Bearing Pads shall be considered incidental to concrete for bridge.

ORIGINAL PLAN		SURVEY PLOTTED BY	KSG	DATE	DEC. 1998
		DRAWN BY			
		TRACED BY			
NOTE BOOK		DESIGNED BY	SK	DEC. 1998	
		QUANTITIES BY	SK	DEC. 1998	
nphbk_s11.dgn		CHECKED BY	DKO	DEC. 1998	

STATE OF HAWAII
DEPARTMENT OF TRANSPORTATION
HIGHWAYS DIVISION

POHAKEA STREAM BRIDGE
TYPICAL ABUTMENT SECTIONS AND DETAILS
HONOAPIILANI HIGHWAY WIDENING
North Kihei Road to Kuihelani Highway
Fed. Aid Proj. No. BR-NH-030-1(24)

Scale: As Noted — Date: Dec. 1998

SHEET No. S11 OF 37 SHEETS

FED. ROAD DIST. NO.	STATE	FED. AID PROJ. NO.	FISCAL YEAR	SHEET NO.	TOTAL SHEETS
HAWAII	HAW.	BR-NH-030-1(24)	2000	60	139

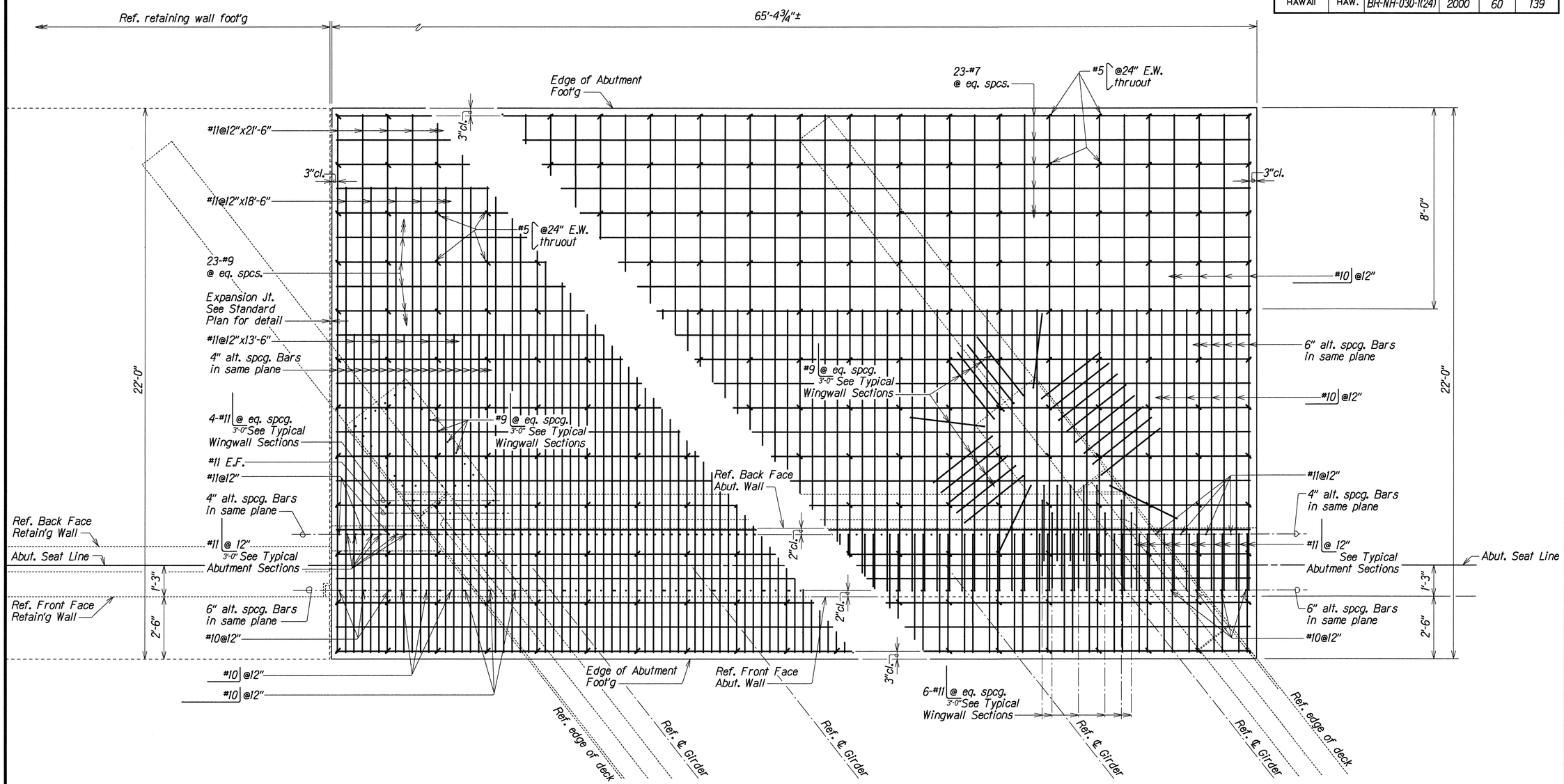

TOP SLAB REINFORCING

BOTTOM SLAB REINFORCING

PARTIAL PLAN--TYPICAL ABUTMENT FOOTING REINFORCING ARRANGEMENT

Scale: ½" = 1'-0"

ORIGINAL PLAN	SURVEY PLOTTED BY	KSG	DATE	DEC 1998
	DRAWN BY			
	TRACED BY	SK		DEC 1998
NOTE BOOK	DESIGNED BY			DEC 1998
	QUANTITIES BY	SK		DEC 1998
Nplot. s12.dgn	CHECKED BY	DJO		DEC 1998

STATE OF HAWAII
DEPARTMENT OF TRANSPORTATION
HIGHWAYS DIVISION

POHAKEA STREAM BRIDGE
PLAN--TYPICAL ABUTMENT FOOTING REINFORCING
HONOAPIILANI HIGHWAY WIDENING
North Kihei Road to Kuihelani Highway
Fed. Aid Proj. No. BR-NH-030-1(24)

Scale: As Noted — Date: Dec. 1998

SHEET No. S12 OF 37 SHEETS

FED. ROAD DIST. NO.	STATE	FED. AID PROJ. NO.	FISCAL YEAR	SHEET NO.	TOTAL SHEETS
HAWAII	HAW.	BR-NH-030-1(24)	2000	61	139

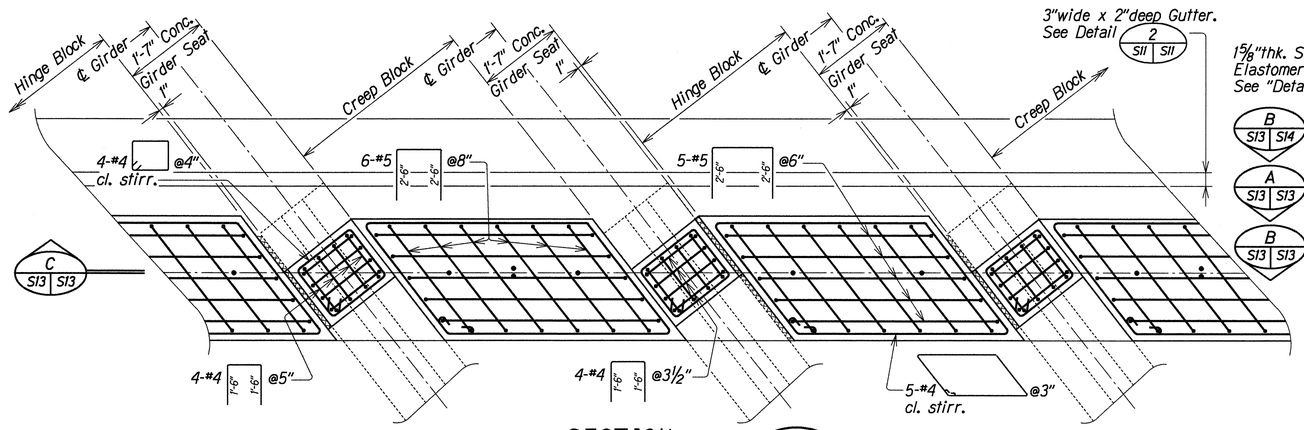

SECTION A S13 S13

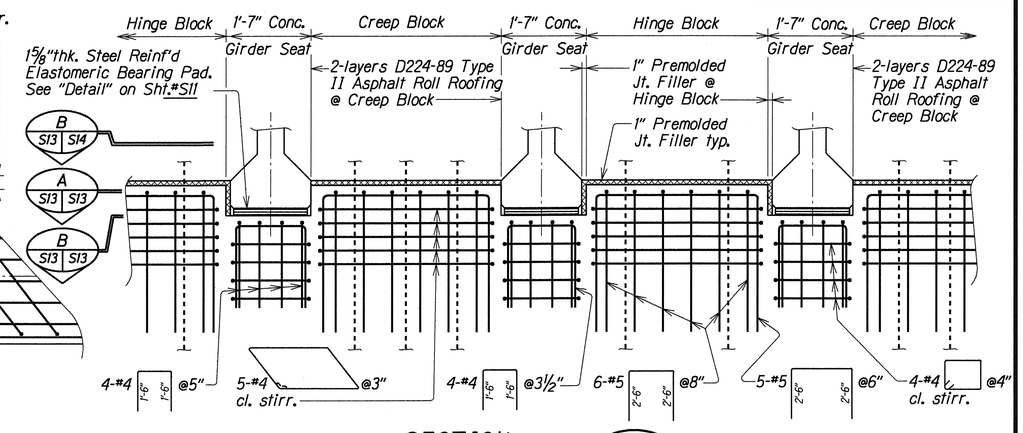

SECTION C S13 S13

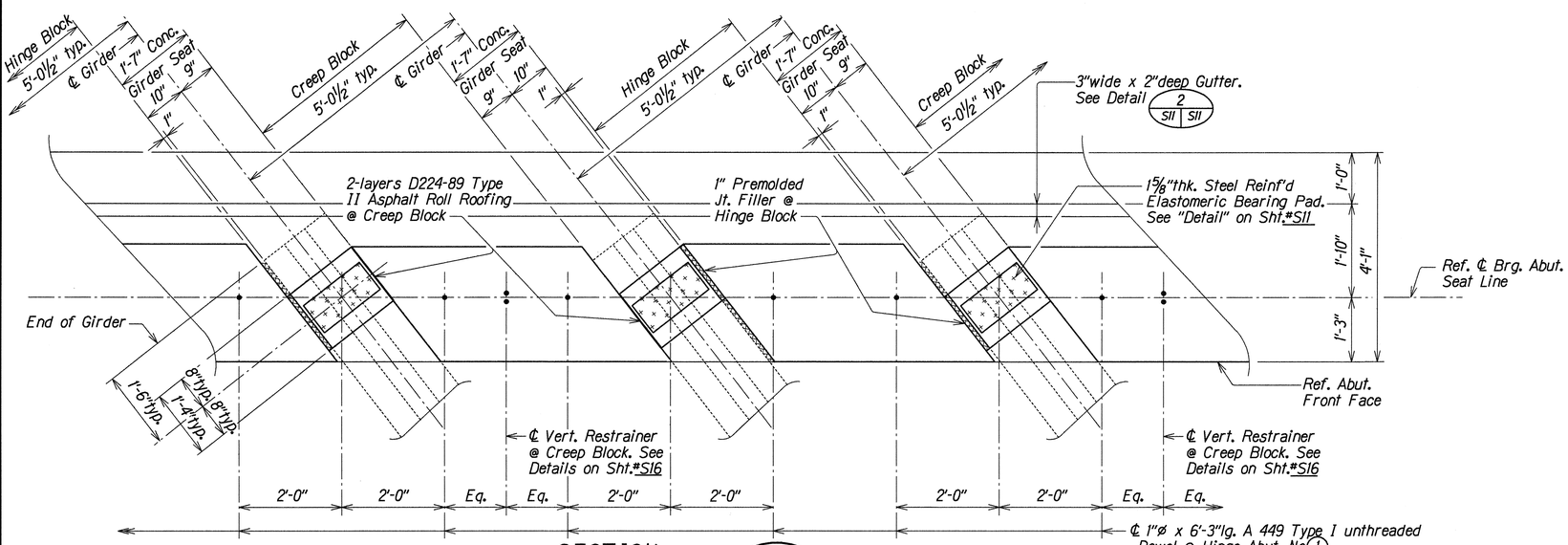

SECTION B S13 S13

TYPICAL ABUTMENT CREEP BLOCK, HINGE BLOCK AND CONCRETE SEAT REINFORCING DETAILS

Scale: ¾" = 1'-0"

ORIGINAL PLAN	SURVEY PLOTTED BY KSG	DATE DEC 1998
	DRAWN BY KSG	
	TRACED BY SK	DEC 1998
NOTE BOOK	DESIGNED BY SK	DEC 1998
	QUANTITIES BY DKO	DEC 1998
notbk s13.dgn	CHECKED BY	DEC 1998

STATE OF HAWAII
DEPARTMENT OF TRANSPORTATION
HIGHWAYS DIVISION

POHAKEA STREAM BRIDGE
TYPICAL ABUTMENT CREEP BLOCK, HINGE BLOCK AND CONCRETE SEAT REINFORCING DETAILS
HONOAPIILANI HIGHWAY WIDENING
North Kihei Road to Kuihelani Highway
Fed. Aid Proj. No. BR-NH-030-1(24)

Scale: As Noted Date: Dec. 1998

SHEET No. S13 OF 37 SHEETS

FED. ROAD DIST. NO.	STATE	FED. AID PROJ. NO.	FISCAL YEAR	SHEET NO.	TOTAL SHEETS
HAWAII	HAW.	BR-NH-030-1(24)	2000	62	139

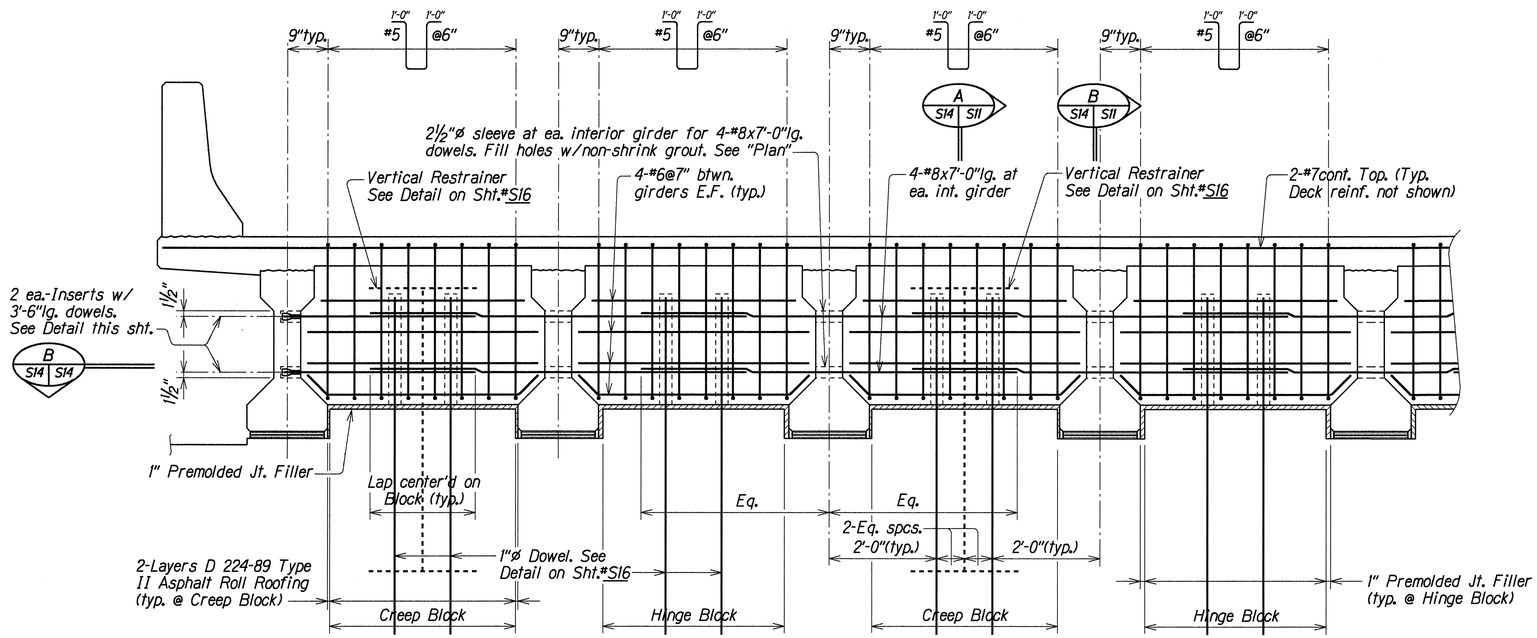

SECTION A (S11 | S14)
Scale: ¾" = 1'-0"

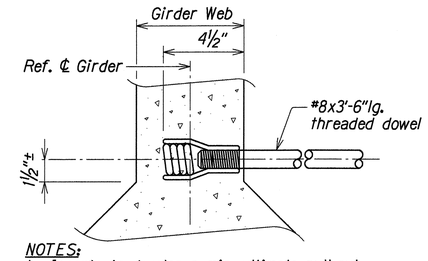

NOTES:
1. Inserts to develop a min. ultimate pull-out strength of 24 Kips.
2. Inserts to be incidental to Concrete in Bridge

TYPICAL INSERT DETAIL

Scale: 3" = 1'-0"

NOTE:
All details and reinforcing similar for Abut. No. 1 and No. 2 except for the Galvanized Steel Tube at Abut. No. 2 and the Bond Breaker applied to the 1"ø dowel along with the Premolded Filler Isolation Pad at Abut. No. 1.

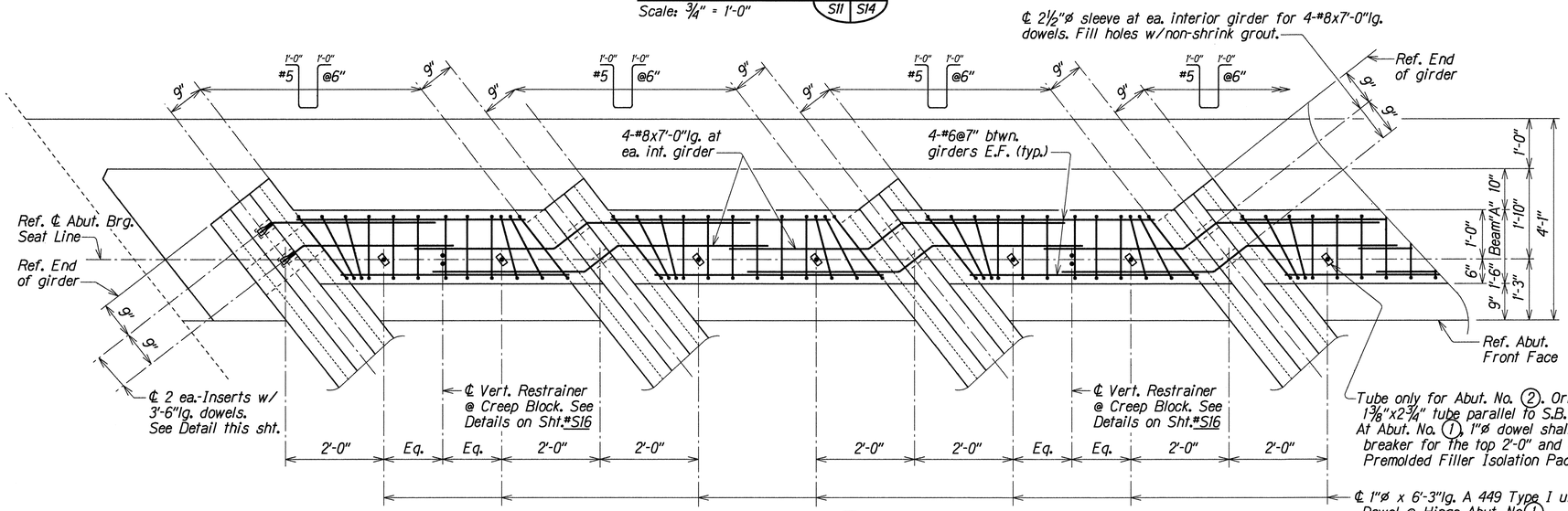

Tube only for Abut. No. 2. Orient long axis of 1⅜"x2¾" tube parallel to S.B. and N.B. baselines. At Abut. No. 1, 1"ø dowel shall be coated w/bond breaker for the top 2'-0" and a 1"øx¾"thk. Premolded Filler Isolation Pad placed at top of bar.

℄ 1"ø x 6'-3"lg. A 449 Type I unthreaded Dowel @ Hinge Abut. No. 1.
℄ 1"ø x 6'-3"lg. A 449 Type I unthreaded Dowel w/ 1⅜"x2¾"x⅛"thk. Galv. Steel Tube @ Exp. Abut. No. 2. See "Abutment Sections" on Sht.#S11 & "Galv. Steel Tube Details" on Sht.#S16

SECTION B (S13 | S14)
Scale: ¾" = 1'-0"

TYPICAL ABUTMENT END BEAM "A" REINFORCMENT DETAILS

ORIGINAL PLAN	SURVEY PLOTTED BY KSG	DATE Dec. 1998
	DRAWN BY	
	TRACED BY SK	DEC. 1998
NOTE BOOK	DESIGNED BY SK	DEC. 1998
	QUANTITIES BY DCO	DEC. 1998
90108_S14.dgn	CHECKED BY	

STATE OF HAWAII
DEPARTMENT OF TRANSPORTATION
HIGHWAYS DIVISION

POHAKEA STREAM BRIDGE
TYPICAL ABUTMENT END BEAM "A" REINFORCEMENT DETAILS
HONOAPIILANI HIGHWAY WIDENING
North Kihei Road to Kuihelani Highway
Fed. Aid Proj. No. BR-NH-030-1(24)

Scale: As Noted — Date: Dec. 1998

FED. ROAD DIST. NO.	STATE	FED. AID PROJ. NO.	FISCAL YEAR	SHEET NO.	TOTAL SHEETS
HAWAII	HAW.	BR-NH-030-1(24)	2000	63	139

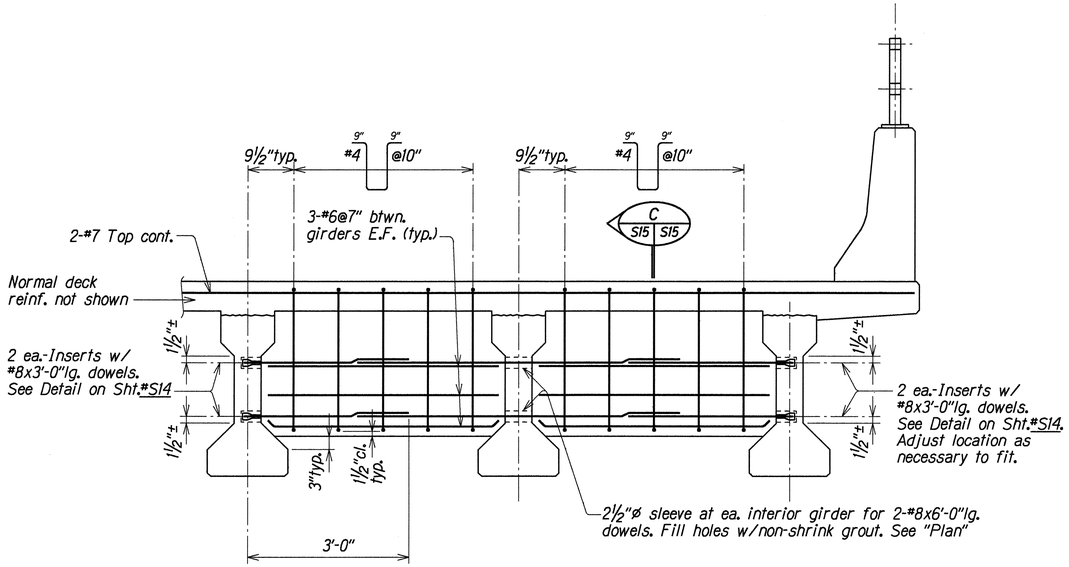

ELEVATION--EXTERIOR AND 1st INTERIOR BAY (A S15 | S15)

Scale: ¾" = 1'-0"

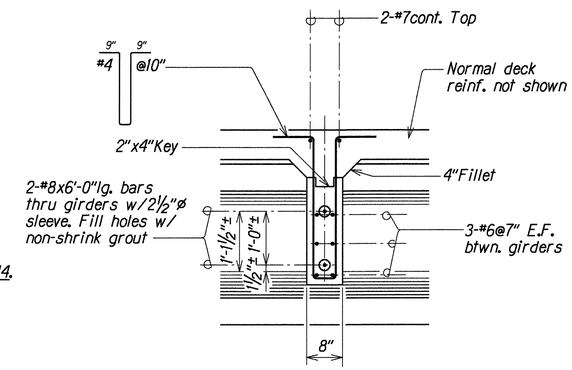

SECTION (C S15 | S15)

Scale: ¾" = 1'-0"

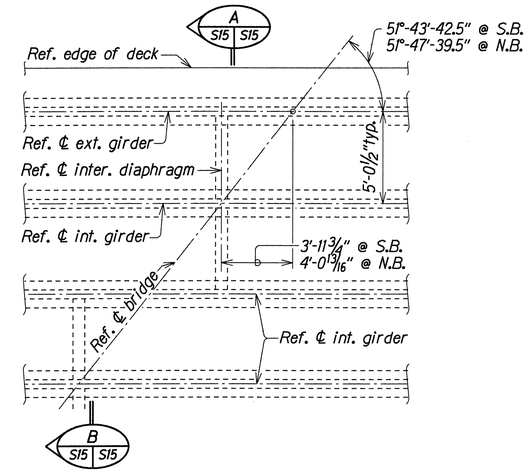

PARTIAL PLAN

Not to Scale

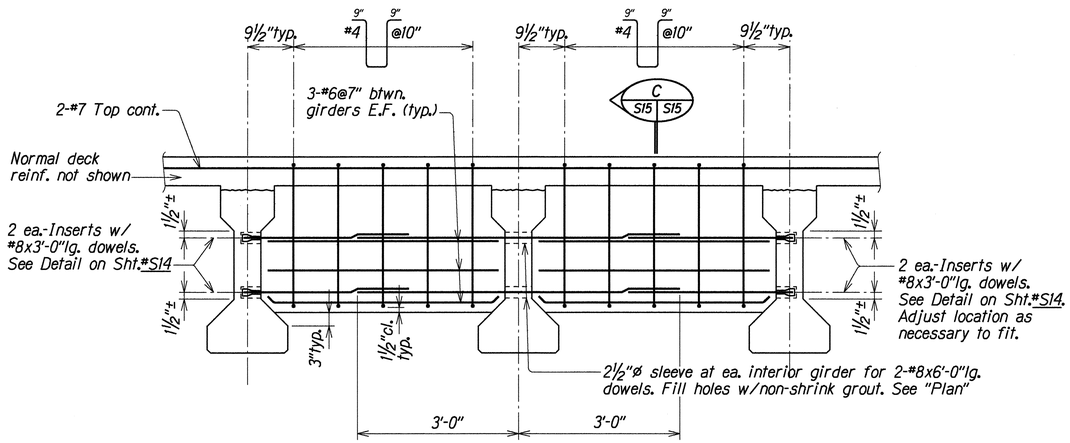

ELEVATION--TYPICAL INTERIOR GIRDER (B S15 | S15)

Scale: ¾" = 1'-0"

NOTES:

1. Intermediate diaphragms shall be Class BD concrete, f'_c = 3,750 psi.
2. Apply epoxy bonding compound to contact area on girders prior to placing intermediate diaphragms. Epoxy bonding compound shall be incidental to concrete in bridge.
3. Bars in the sleeves shall be secured with grout before pouring diaphragms.
4. Inserts and sleeves are incidental items to concrete in bridge.
5. See "Deck Framing Plan" on Sht.#S5 for location of sleeve holes.

INTERMEDIATE DIAPHRAGM BEAM "B" DETAILS

ORIGINAL PLAN	SURVEY PLOTTED BY	KSC	DATE DEC. 1998
	DRAWN BY		
	TRACED BY	SK	DEC. 1998
NOTE BOOK	DESIGNED BY	SK	DEC. 1998
	QUANTITIES BY	SK	DEC. 1998
N:\0104_s15.dgn	CHECKED BY	DKO	DEC. 1998

STATE OF HAWAII
DEPARTMENT OF TRANSPORTATION
HIGHWAYS DIVISION

POHAKEA STREAM BRIDGE
INTERMEDIATE DIAPHRAGM BEAM "B" DETAILS
HONOAPIILANI HIGHWAY WIDENING
North Kihei Road to Kuihelani Highway
Fed. Aid Proj. No. BR-NH-030-1(24)

Scale: As Noted — Date: Dec. 1998

FED. ROAD DIST. NO.	STATE	FED. AID PROJ. NO.	FISCAL YEAR	SHEET NO.	TOTAL SHEETS
HAWAII	HAW.	BR-NH-030-1(24)	2000	64	139

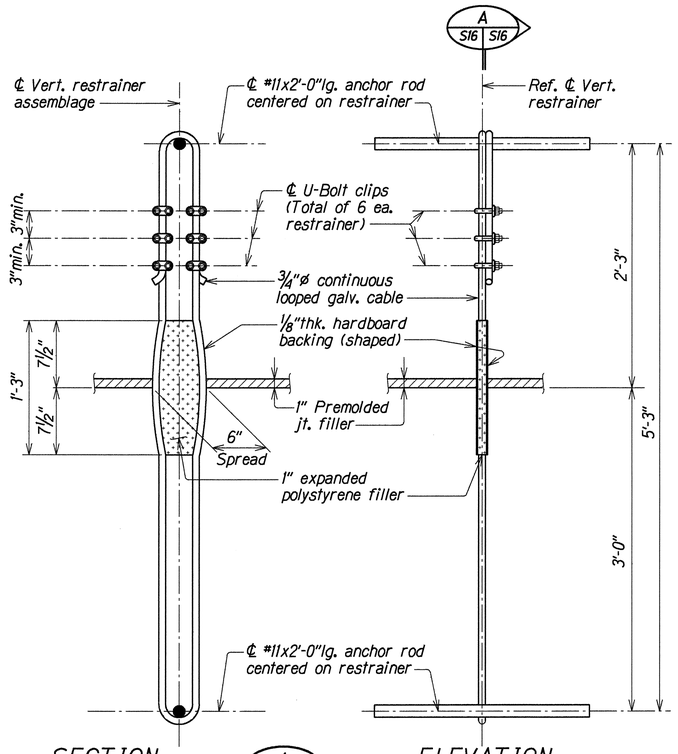

SECTION A S16 S16 — ELEVATION

Scale: 3/4" = 1'-0"

NOTES:

1. Restrainer assemblage incidental to concrete and will not be paid for separately.
2. Restrainer assemblage shall be securely held in place while placing concrete.
3. For cables, wires, U-bolts and cable clips, refer to Section 709, Reinforcing Steel, of the Standard Specifications.

TYPICAL VERTICAL RESTRAINER DETAILS

Scale: 1 1/2" = 1'-0"

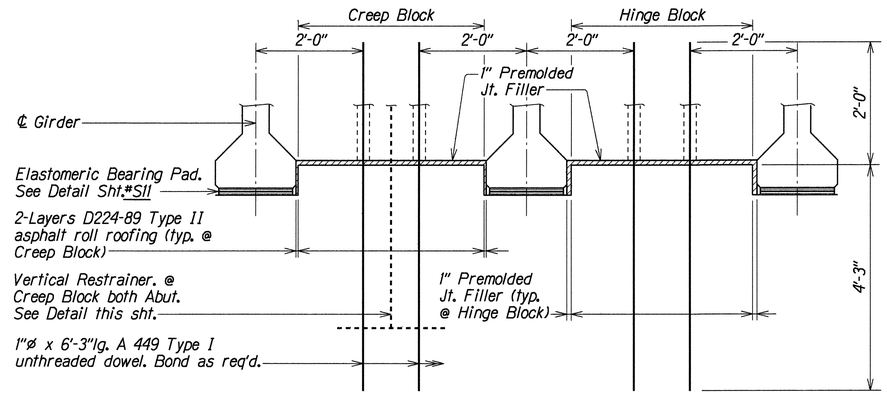

PARTIAL ELEVATION AT EXPANSION ABUTMENT NO. 2

Scale: 3/4" = 1'-0"

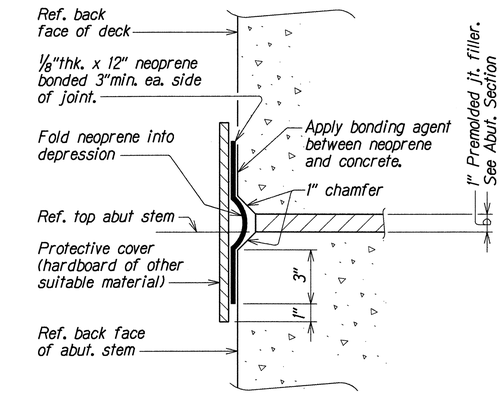

NOTE: Waterproofing assemblage incidental to concrete.

DECK SLAB AND ABUTMENT BACK WALL 1" PREMOLDED JOINT FILLER DETAIL

Scale: 3" = 1'-0"

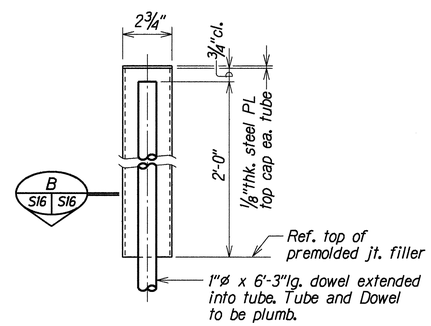

ELEVATION

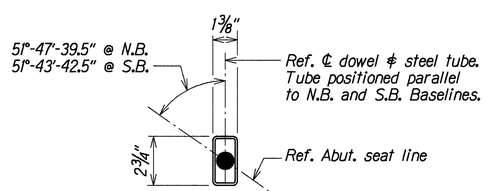

SECTION B S16 S16

Scale: 3" = 1'-0"

NOTES:

1. The Contractor shall securely fasten the top cap to the metal tube prior to concrete pour.
2. The Contractor shall secure the tube from moving prior to concrete pour.

1"ø DOWEL AND TUBE DETAILS

AT EXPANSION ABUTMENT NO. 2

Not to Scale

ORIGINAL PLAN	SURVEY PLOTTED BY	KSC	DATE DEC. 1998
	DRAWN BY		
NOTE BOOK	TRACED BY	SK	DEC. 1998
	DESIGNED BY		
	QUANTITIES BY	SK	DEC. 1998
	CHECKED BY	DKO	DEC. 1998

pohak_s16.dgn

STATE OF HAWAII
DEPARTMENT OF TRANSPORTATION
HIGHWAYS DIVISION

POHAKEA STREAM BRIDGE
VERTICAL RESTRAINER, JOINT FILLER AND 1"ø DOWEL & TUBE DETAILS
HONOAPIILANI HIGHWAY WIDENING
North Kihei Road to Kuihelani Highway
Fed. Aid Proj. No. BR-NH-030-1(24)

Scale: As Noted — Date: Dec. 1998

SHEET No. S16 OF 37 SHEETS

FED. ROAD DIST. NO.	STATE	FED. AID PROJ. NO.	FISCAL YEAR	SHEET NO.	TOTAL SHEETS
HAWAII	HAW.	BR-NH-030-1(24)	2000	65	139

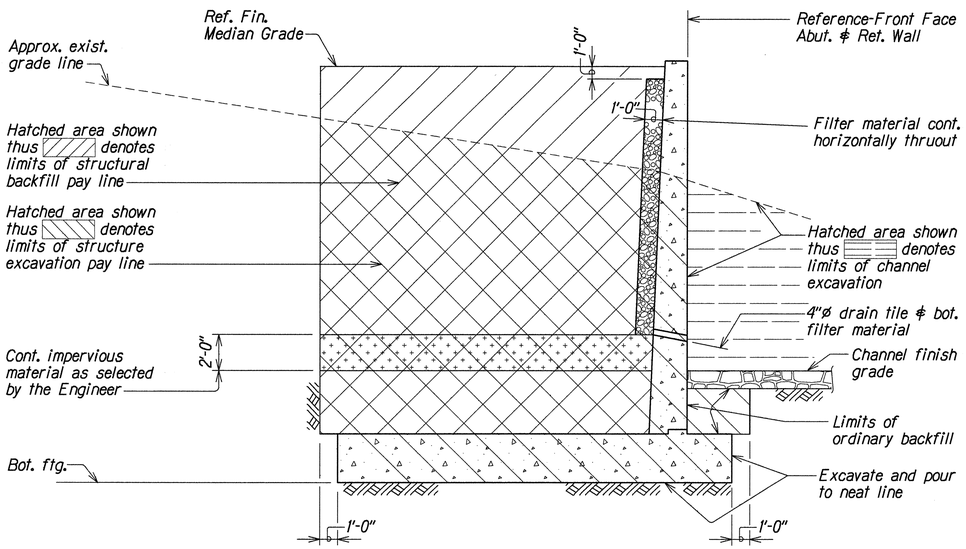

TYPICAL STRUCTURE EXCAVATION AND BACKFILL PAY LIMITS AT RETAINING WALL

Not to Scale

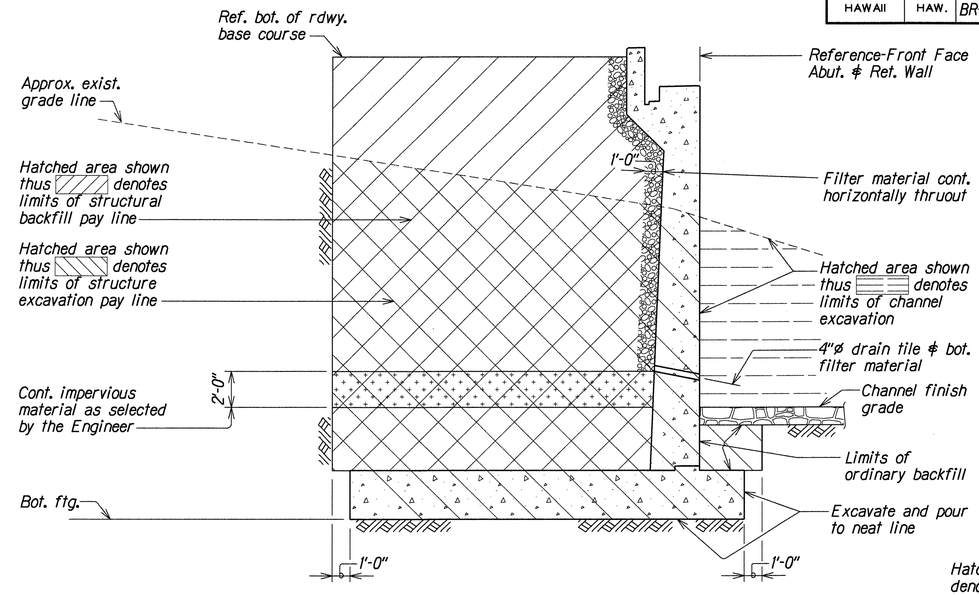

TYPICAL STRUCTURE EXCAVATION AND BACKFILL PAY LIMITS AT ABUTMENT

Not to Scale

Hatched area shown thus denotes limits of structural backfill pay limits

Hatched area shown thus denotes limits of structure excavation pay limits

Hatched area shown thus denotes limits of channel excavation

Patterned area shown thus denotes limits of impervious material

TYPICAL STRUCTURE EXCAVATION AND BACKFILL PAY LIMITS

NOTES:

1. Payment for impervious material shall shall not be paid for separately and shall be incidental to Structure Backfill Item No. 206.7201.
2. Crushed Rock and Filter Fabric shall be incidental to Structure Backfill Item No. 206.7201.
3. 4"ø PVC Drains @ 10'-0"max o.c. with 1/4" per 1'-0" slope shall be located 6"max. above the finish grade of channel.
4. Impervious material as selected by the Engineer shall be made as impervious as possible by pneumatic tamping or other approved method.

ORIGINAL PLAN	SURVEY PLOTTED BY		DATE
	DRAWN BY	KSG	DEC 1998
	TRACED BY		
NOTE BOOK	DESIGNED BY	SK	DEC 1998
	QUANTITIES BY	SK	DEC 1998
40bhk s17.dgn	CHECKED BY	DCO	DEC 1998

STATE OF HAWAII
DEPARTMENT OF TRANSPORTATION
HIGHWAYS DIVISION

POHAKEA STREAM BRIDGE
TYPICAL STRUCTURE EXCAVATION AND BACKFILL PAY LIMITS
HONOAPIILANI HIGHWAY WIDENING
North Kihei Road to Kuihelani Highway
Fed. Aid Proj. No. BR-NH-030-1(24)

Scale: As Noted Date: Dec. 1998

FED. ROAD DIST. NO.	STATE	FED. AID PROJ. NO.	FISCAL YEAR	SHEET NO.	TOTAL SHEETS
HAWAII	HAW.	BR-NH-030-1(24)	2000	66	139

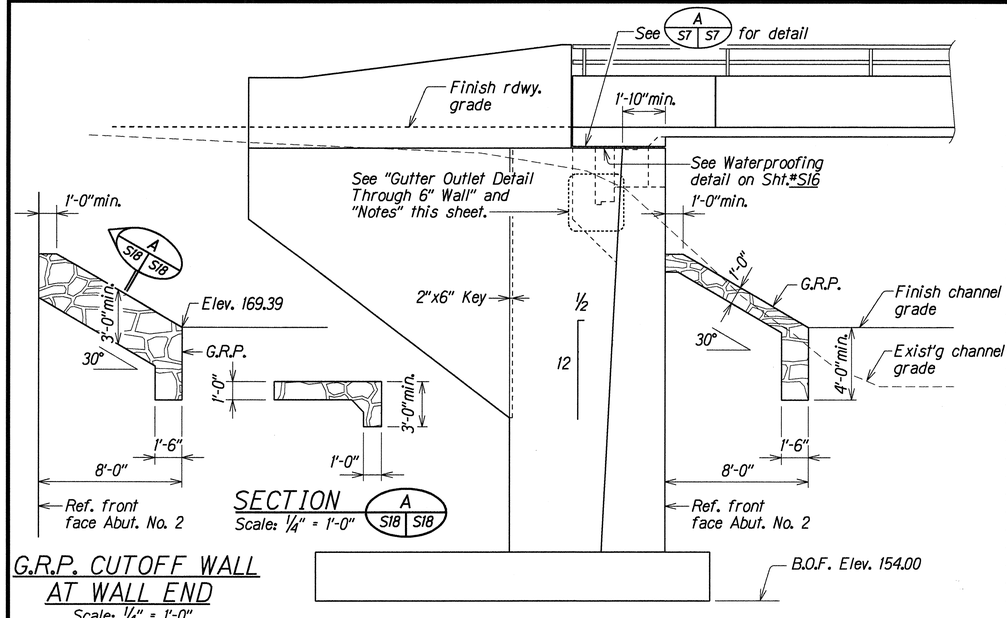

SECTION A S18 S18
Scale: 1/4" = 1'-0"

G.R.P. CUTOFF WALL AT WALL END
Scale: 1/4" = 1'-0"

ELEVATION AT WINGWALL NO. 3
Scale: 1/4" = 1'-0"

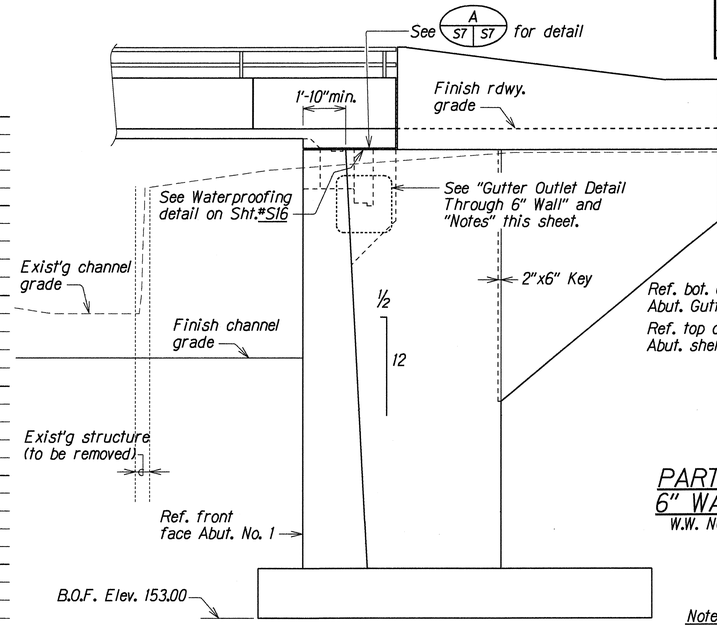

ELEVATION AT WINGWALL NO. 1
Scale: 1/4" = 1'-0"

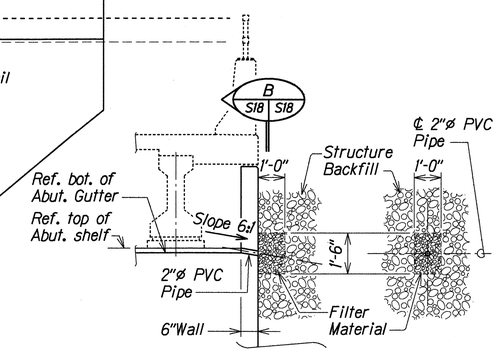

PARTIAL SECTION-- 6" WALL @ W.W. NO. 1
W.W. NOS. 3, 6 & 8 SIMILAR

SECTION B S18 S18

GUTTER OUTLET DETAIL THROUGH 6" WALL
Scale: 3/8" = 1'-0"

Notes:
1. The Contractor shall provide Gutter Outlet through 6" Walls. See "Gutter Outlet Details" this sheet.
2. Filter Material and PVC Pipe shall be considered incidental to Filter Material Item and will not be paid for separately.

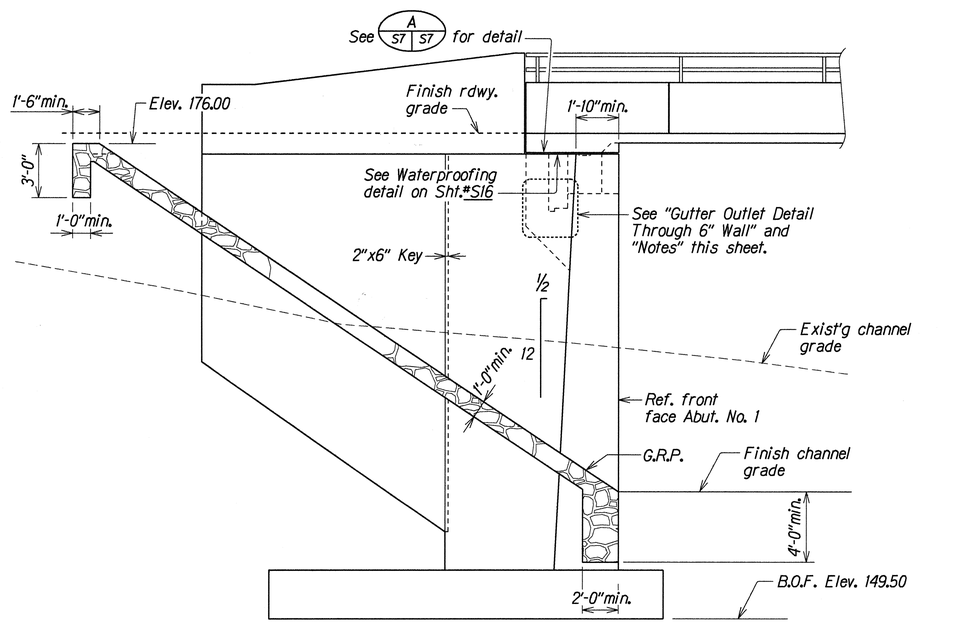

ELEVATION--G.R.P. AT WINGWALL NO. 6
Scale: 1/4" = 1'-0"

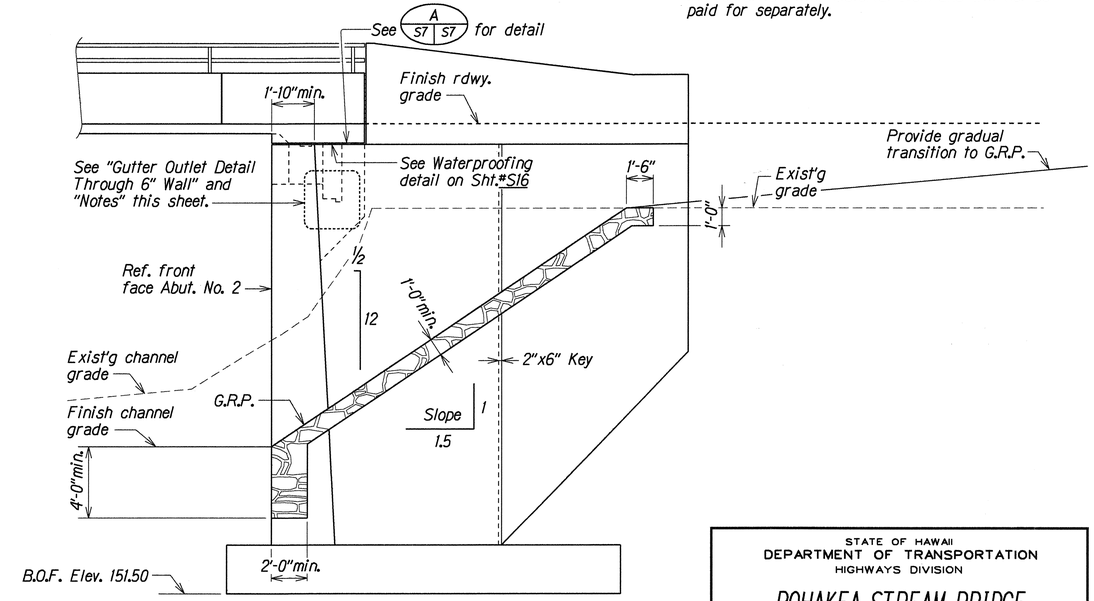

ELEVATION--G.R.P. AT WINGWALL NO. 8
Scale: 1/4" = 1'-0"

ORIGINAL PLAN	SURVEY PLOTTED BY KSG DATE
	DRAWN BY DEC 1998
NOTE BOOK	TRACED BY SK DEC 1998
	DESIGNED BY SK DEC 1998
	QUANTITIES BY DCO DEC 1998
	CHECKED BY

STATE OF HAWAII
DEPARTMENT OF TRANSPORTATION
HIGHWAYS DIVISION

POHAKEA STREAM BRIDGE
ELEVATIONS AT WINGWALLS
HONOAPIILANI HIGHWAY WIDENING
North Kihei Road to Kuihelani Highway
Fed. Aid Proj. No. BR-NH-030-1(24)

Scale: As Noted — Date: Dec, 1998

FED. ROAD DIST. NO.	STATE	FED. AID PROJ. NO.	FISCAL YEAR	SHEET NO.	TOTAL SHEETS
HAWAII	HAW.	BR-NH-030-1(24)	2000	67	139

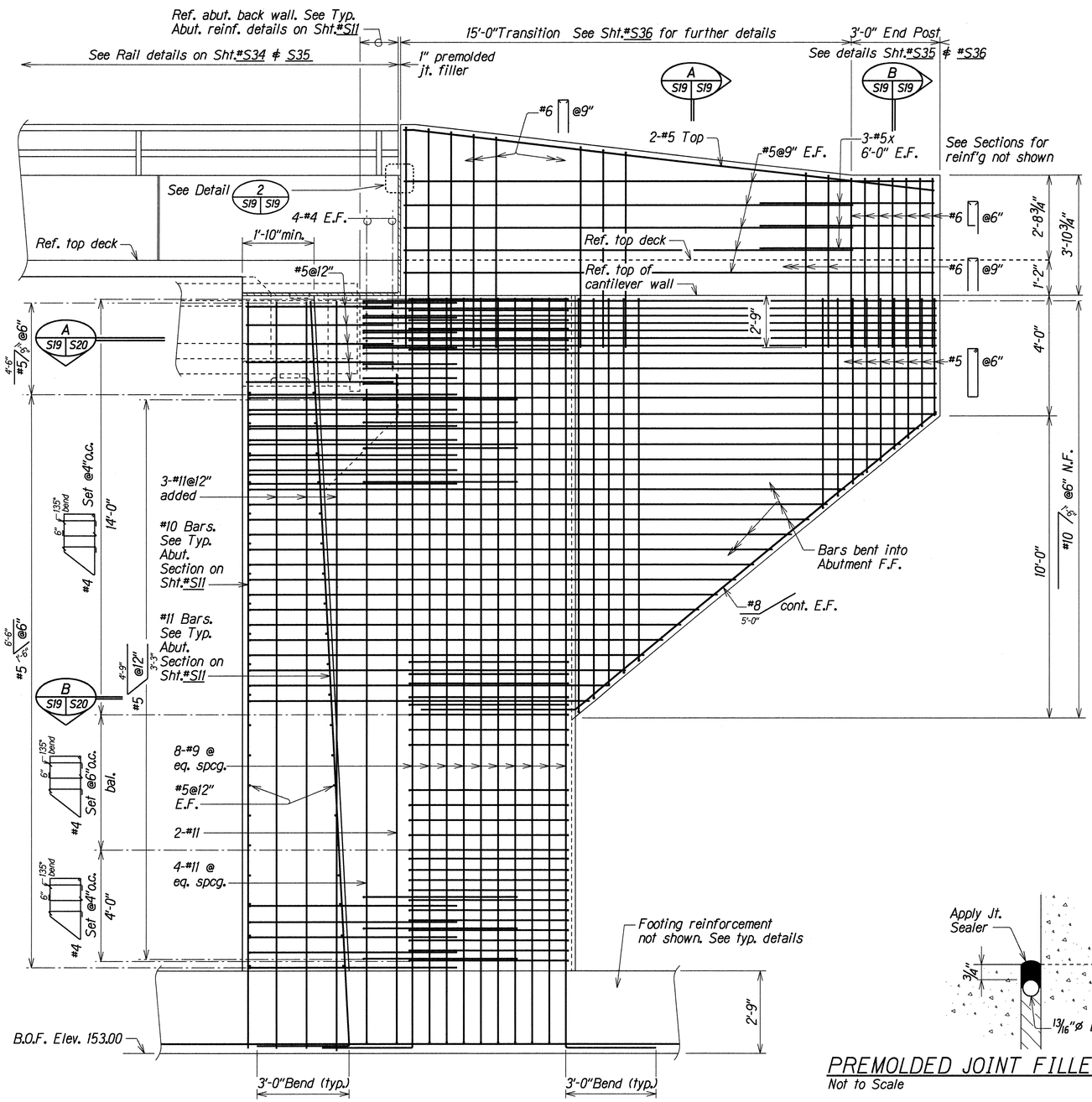

SECTION A S20 S19
Scale: ½" = 1'-0"

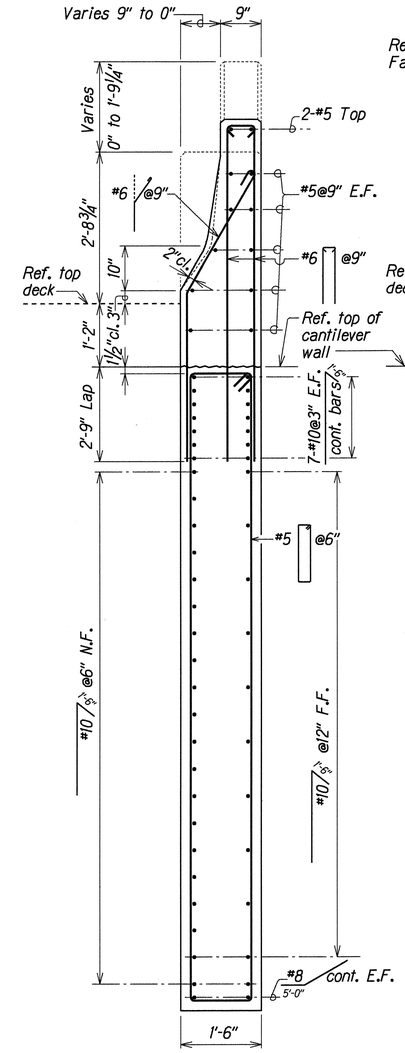

SECTION A S19 S19
Scale: ¾" = 1'-0"

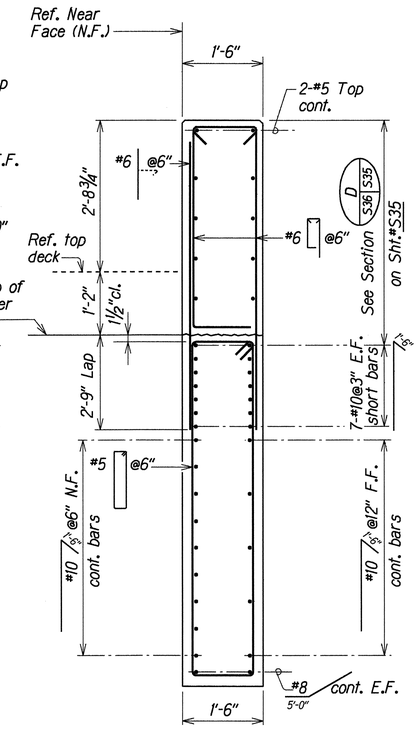

SECTION B S19 S19
Scale: ¾" = 1'-0"

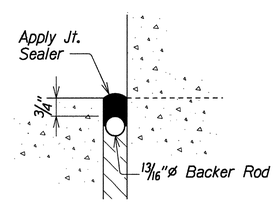

PREMOLDED JOINT FILLER DETAIL 2 S19 S19
Not to Scale

ORIGINAL PLAN	SURVEY PLOTTED BY		DATE
	DRAWN BY	KSG	DEC 1998
	TRACED BY	SK	DEC 1998
NOTE BOOK	DESIGNED BY	SK	DEC 1998
	QUANTITIES BY	SK	DEC 1998
	CHECKED BY	DKO	DEC 1998

sp0ldk_s19.dgn

CANTILEVER WINGWALL NO. 1 DETAILS
AT ABUTMENT NO. 1--SB LANES

STATE OF HAWAII
DEPARTMENT OF TRANSPORTATION
HIGHWAYS DIVISION

POHAKEA STREAM BRIDGE
CANTILEVER WINGWALL NO. 1 DETAILS
HONOAPIILANI HIGHWAY WIDENING
North Kihei Road to Kuihelani Highway
Fed. Aid Proj. No. BR-NH-030-1(24)

Scale: As Noted — Date: Dec. 1998

SHEET No. S19 OF 37 SHEETS

FED. ROAD DIST. NO.	STATE	FED. AID PROJ. NO.	FISCAL YEAR	SHEET NO.	TOTAL SHEETS
HAWAII	HAW.	BR-NH-030-1(24)	2000	68	139

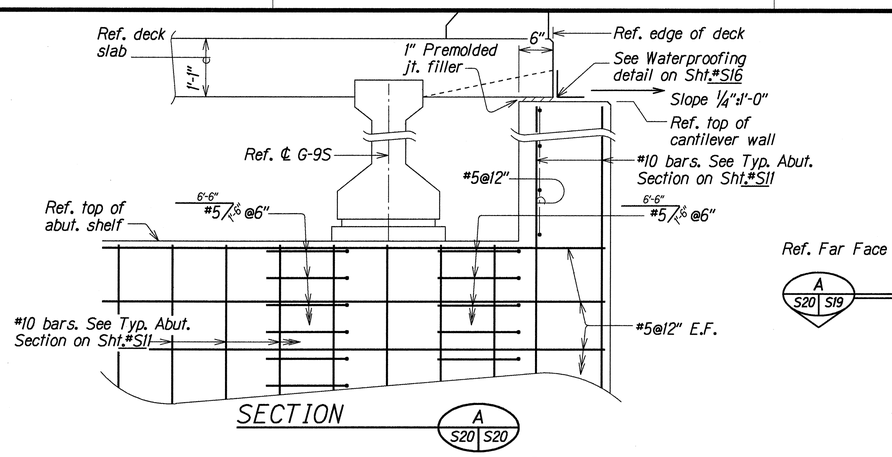

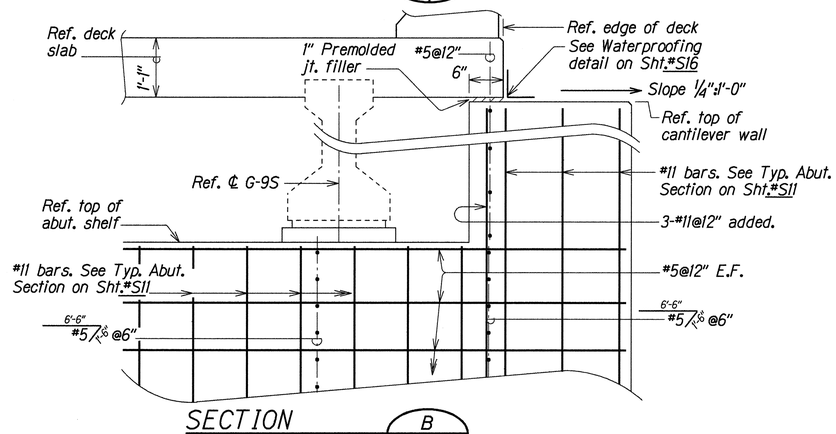

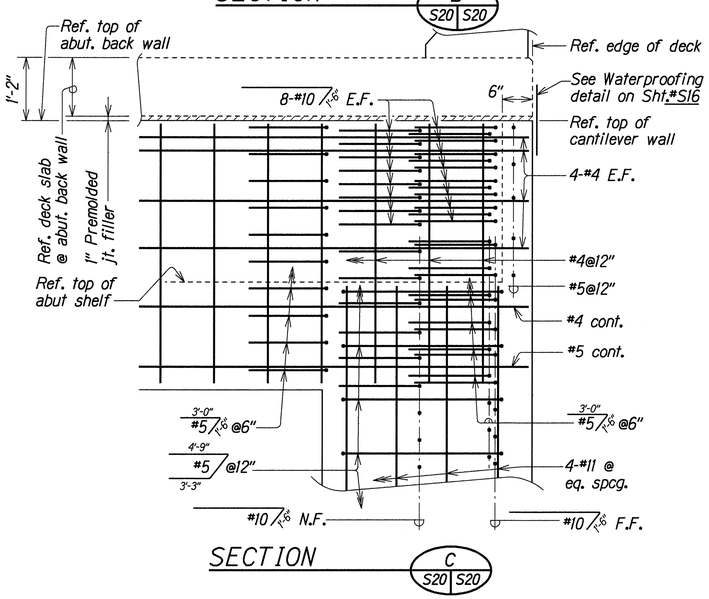

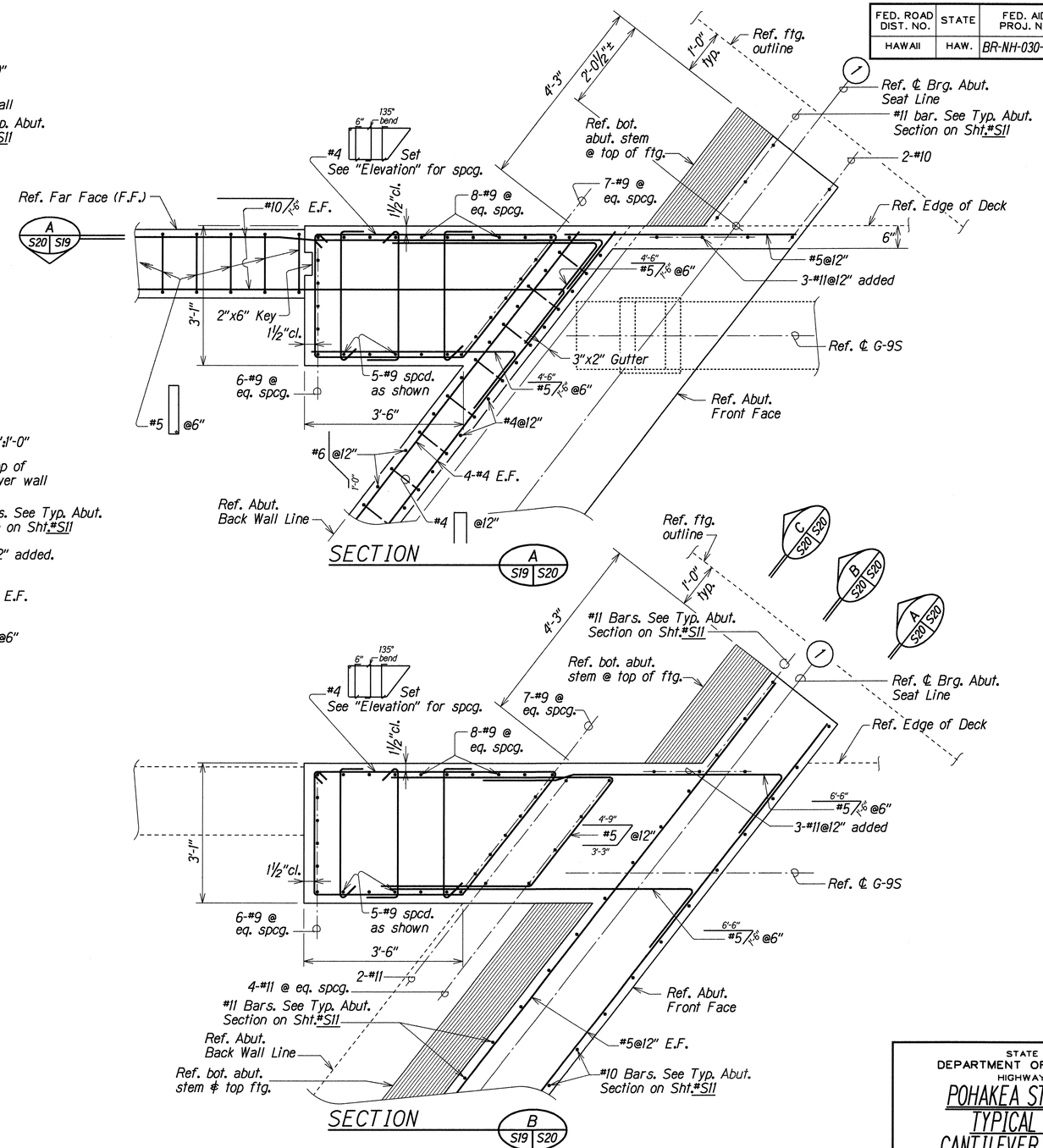

ORIGINAL PLAN	SURVEY PLOTTED BY KSG	DATE DEC. 1998
	DRAWN BY	
NOTE BOOK	TRACED BY SK	DEC. 1998
	DESIGNED BY SK	DEC. 1998
	QUANTITIES BY DCO	DEC. 1998
	CHECKED BY	

TYPICAL SECTIONS--CANTILEVER WINGWALL NO. 1

AT ABUTMENT NO. 1--SB LANES

Scale: 3/4" = 1'-0"

STATE OF HAWAII
DEPARTMENT OF TRANSPORTATION
HIGHWAYS DIVISION

POHAKEA STREAM BRIDGE
TYPICAL SECTIONS--
CANTILEVER WINGWALL NO. 1
HONOAPIILANI HIGHWAY WIDENING
North Kihei Road to Kuihelani Highway
Fed. Aid Proj. No. BR-NH-030-1(24)

Scale: As Noted — Date: Dec. 1998

SHEET No. S20 OF 37 SHEETS

FED. ROAD DIST. NO.	STATE	FED. AID PROJ. NO.	FISCAL YEAR	SHEET NO.	TOTAL SHEETS
HAWAII	HAW.	BR-NH-030-1(24)	2000	69	139

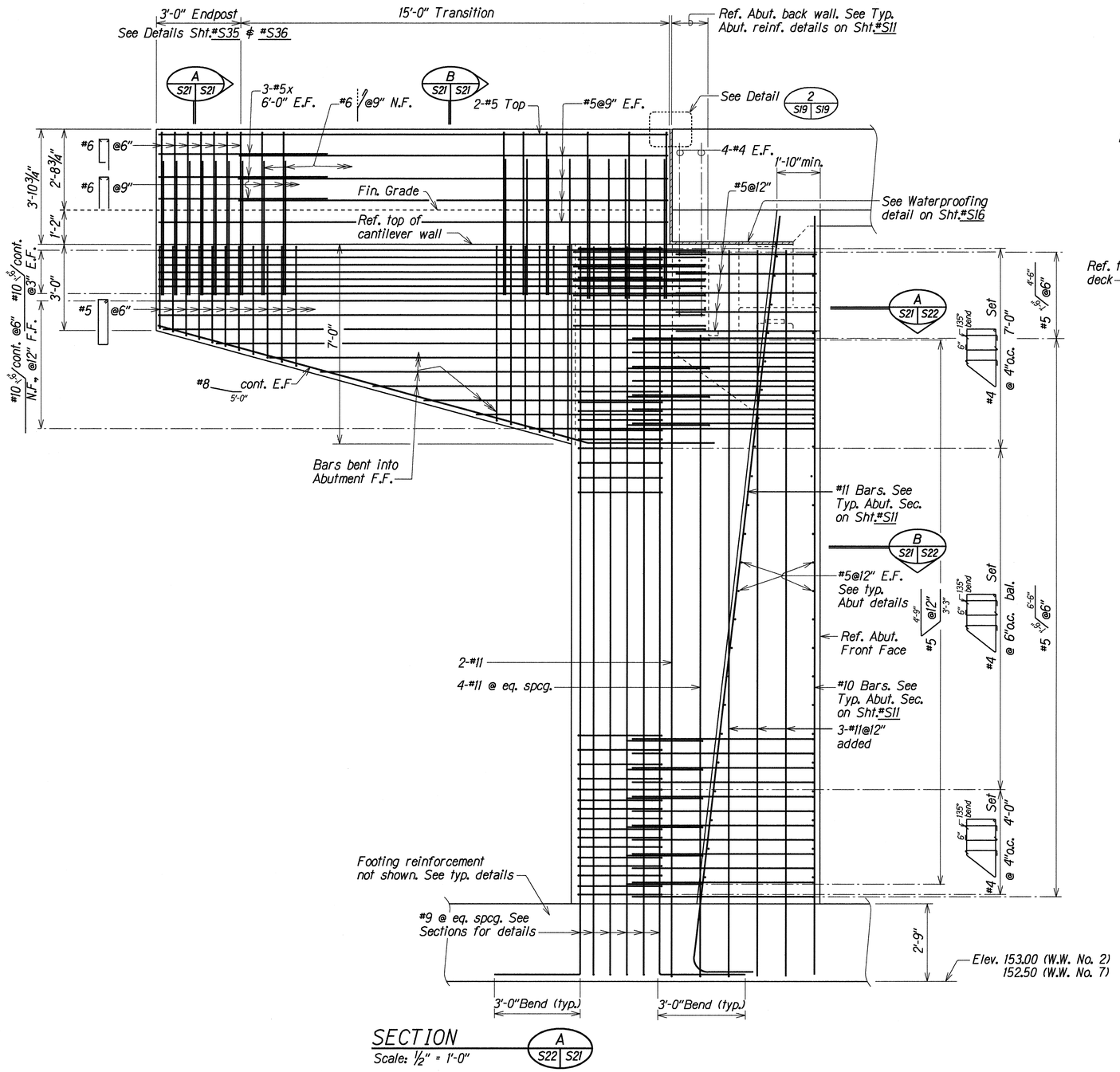

SECTION A S22 S21
Scale: 1/2" = 1'-0"

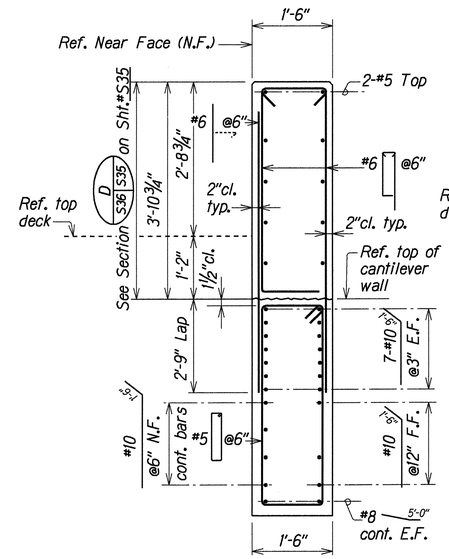

SECTION A S21 S21
Scale: 3/4" = 1'-0"

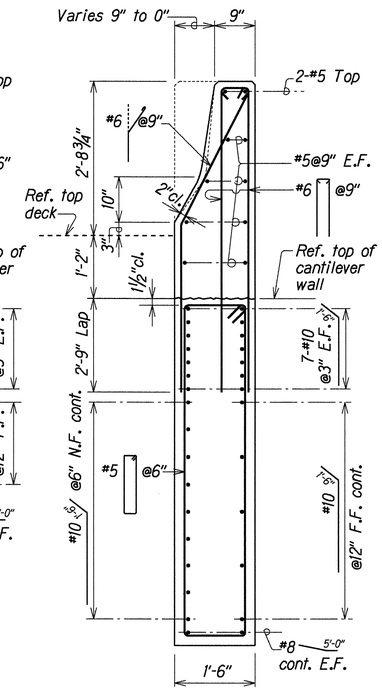

SECTION B S21 S21
Scale: 3/4" = 1'-0"

CANTILEVER WINGWALL NOS. 2 AND 7 DETAILS

AT ABUTMENT NO. 1--SB LANES (W.W. NO. 2), AT ABUTMENT NO. 2--NB LANES (W.W. NO. 7)

ORIGINAL PLAN	SURVEY PLOTTED BY		DATE
	DRAWN BY	KSG	DEC 1998
	TRACED BY		
NOTE BOOK	DESIGNED BY	SK	DEC 1998
	QUANTITIES BY	SK	DEC 1998
	CHECKED BY	DKO	DEC 1998

pohak_s21.dgn

STATE OF HAWAII
DEPARTMENT OF TRANSPORTATION
HIGHWAYS DIVISION

POHAKEA STREAM BRIDGE
CANTILEVER WINGWALL NOS. 2 AND 7
DETAILS

HONOAPIILANI HIGHWAY WIDENING
North Kihei Road to Kuihelani Highway
Fed. Aid Proj. No. BR-NH-030-1(24)

Scale: As Noted — Date: Dec. 1998

SHEET No. S21 OF 37 SHEETS

FED. ROAD DIST. NO.	STATE	FED. AID PROJ. NO.	FISCAL YEAR	SHEET NO.	TOTAL SHEETS
HAWAII	HAW.	BR-NH-030-1(24)	2000	70	139

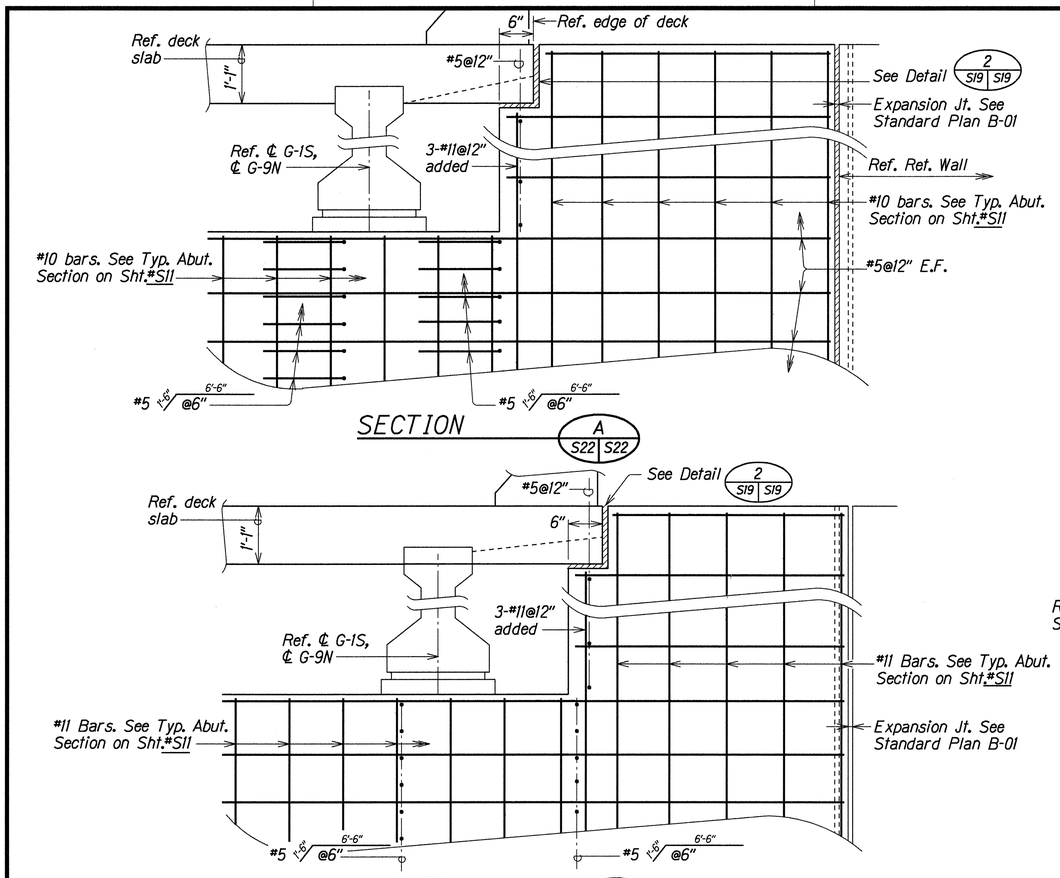

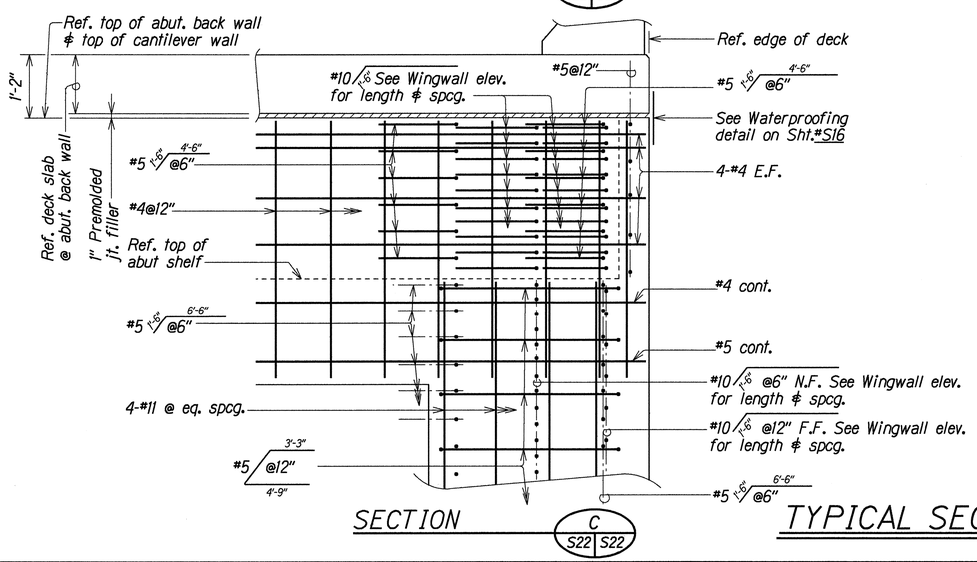

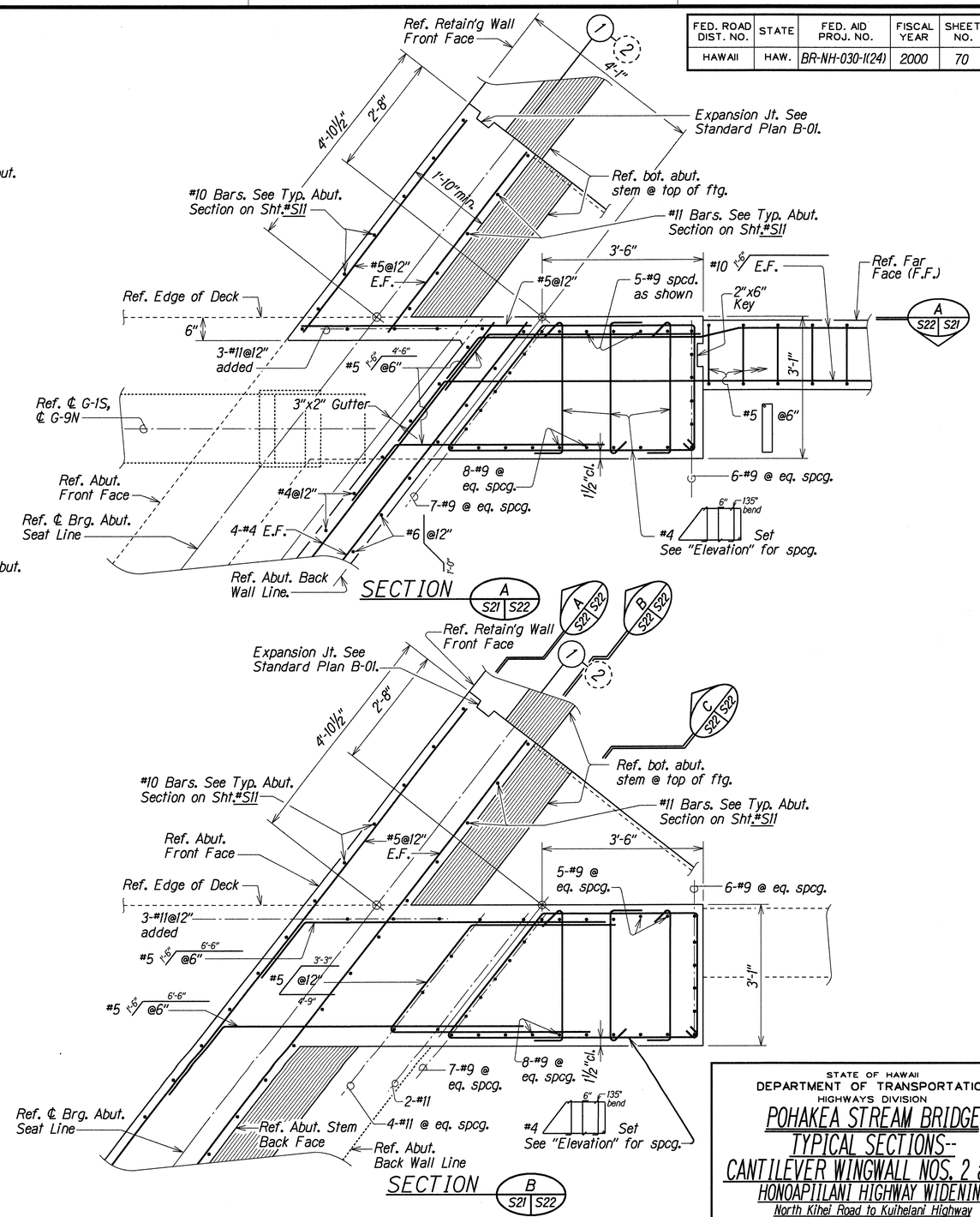

TYPICAL SECTIONS--CANTILEVER WINGWALL NOS. 2 and 7

Scale: 3/4" = 1'-0"

ORIGINAL PLAN	SURVEY PLOTTED BY	KSG	DATE DEC 1998
	DRAWN BY		
	TRACED BY	SK	DEC 1998
NOTE BOOK	DESIGNED BY	SK	DEC 1998
	QUANTITIES BY	SK	DEC 1998
	CHECKED BY	DOO	DEC 1998

STATE OF HAWAII
DEPARTMENT OF TRANSPORTATION
HIGHWAYS DIVISION

POHAKEA STREAM BRIDGE
TYPICAL SECTIONS--
CANTILEVER WINGWALL NOS. 2 and 7
HONOAPIILANI HIGHWAY WIDENING
North Kihei Road to Kuihelani Highway
Fed. Aid Proj. No. BR-NH-030-1(24)

Scale: As Noted — Date: Dec. 1998

SHEET No. S22 OF 37 SHEETS

FED. ROAD DIST. NO.	STATE	FED. AID PROJ. NO.	FISCAL YEAR	SHEET NO.	TOTAL SHEETS
HAWAII	HAW.	BR-NH-030-1(24)	2000	71	139

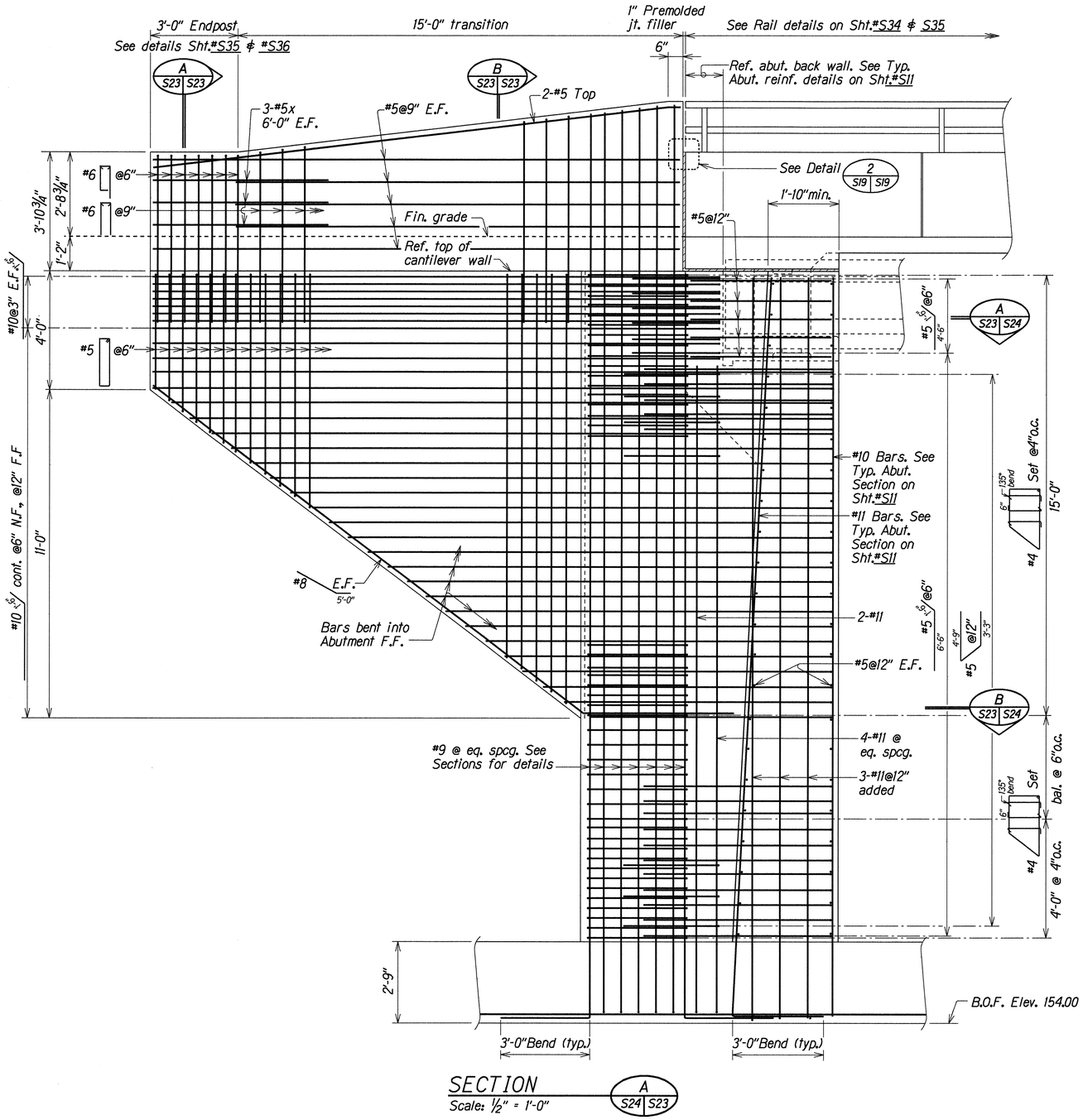

SECTION A S24 S23
Scale: ½" = 1'-0"

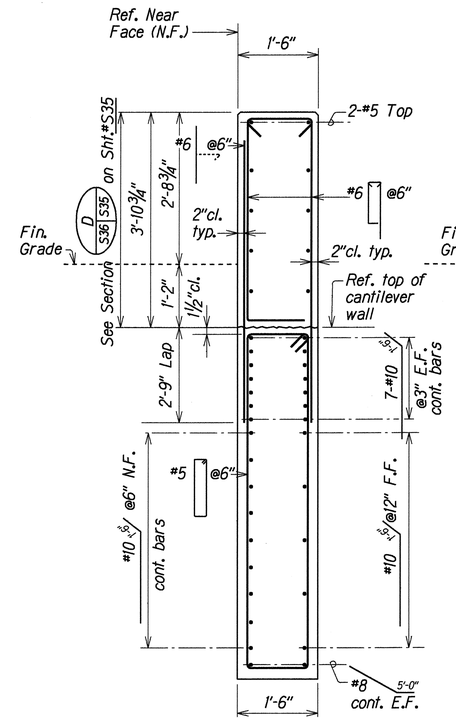

SECTION A S23 S23
Scale: ¾" = 1'-0"

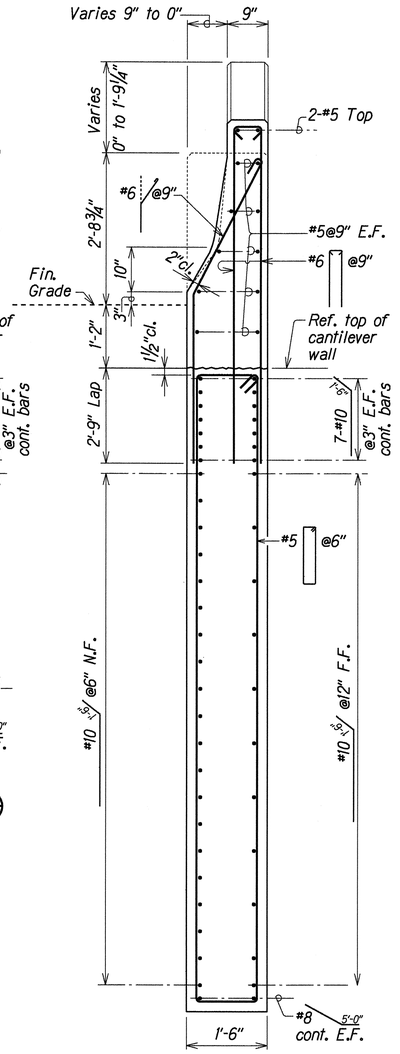

SECTION B S23 S23
Scale: ¾" = 1'-0"

CANTILEVER WINGWALL NO. 3 DETAILS
AT ABUTMENT NO. 2--SB LANES

ORIGINAL PLAN	SURVEY PLOTTED BY KSG	DATE DEC 1998
	DRAWN BY	
NOTE BOOK	TRACED BY SK	DEC 1998
	DESIGNED BY SK	DEC 1998
	QUANTITIES BY DOO	DEC 1998
	CHECKED BY	

STATE OF HAWAII
DEPARTMENT OF TRANSPORTATION
HIGHWAYS DIVISION

POHAKEA STREAM BRIDGE
CANTILEVER WINGWALL NO. 3 DETAILS
HONOAPIILANI HIGHWAY WIDENING
North Kihei Road to Kuihelani Highway
Fed. Aid Proj. No. BR-NH-030-1(24)

Scale: As Noted — Date: Dec. 1998

SHEET No. S23 OF 37 SHEETS

FED. ROAD DIST. NO.	STATE	FED. AID PROJ. NO.	FISCAL YEAR	SHEET NO.	TOTAL SHEETS
HAWAII	HAW.	BR-NH-030-1(24)	2000	72	139

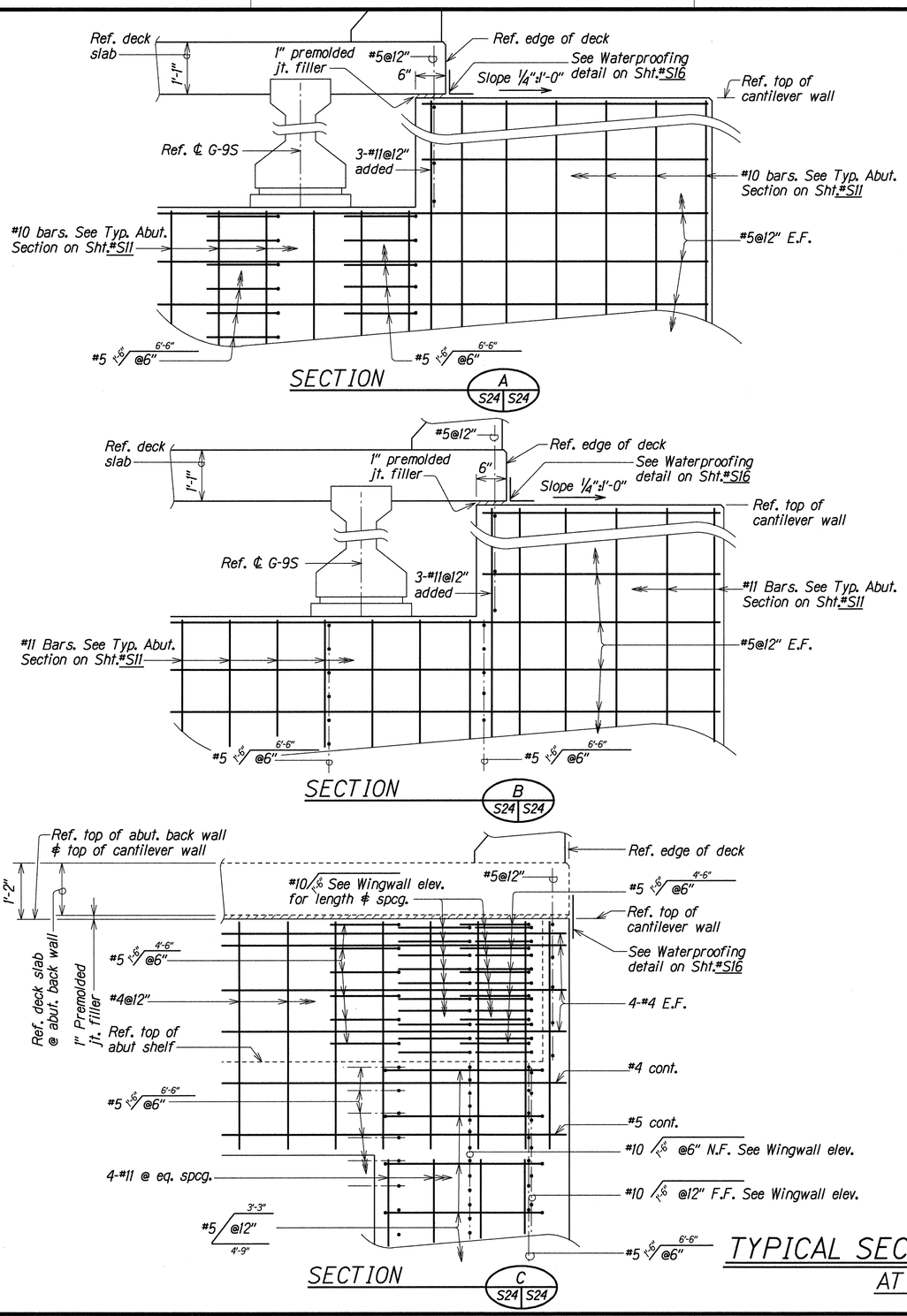

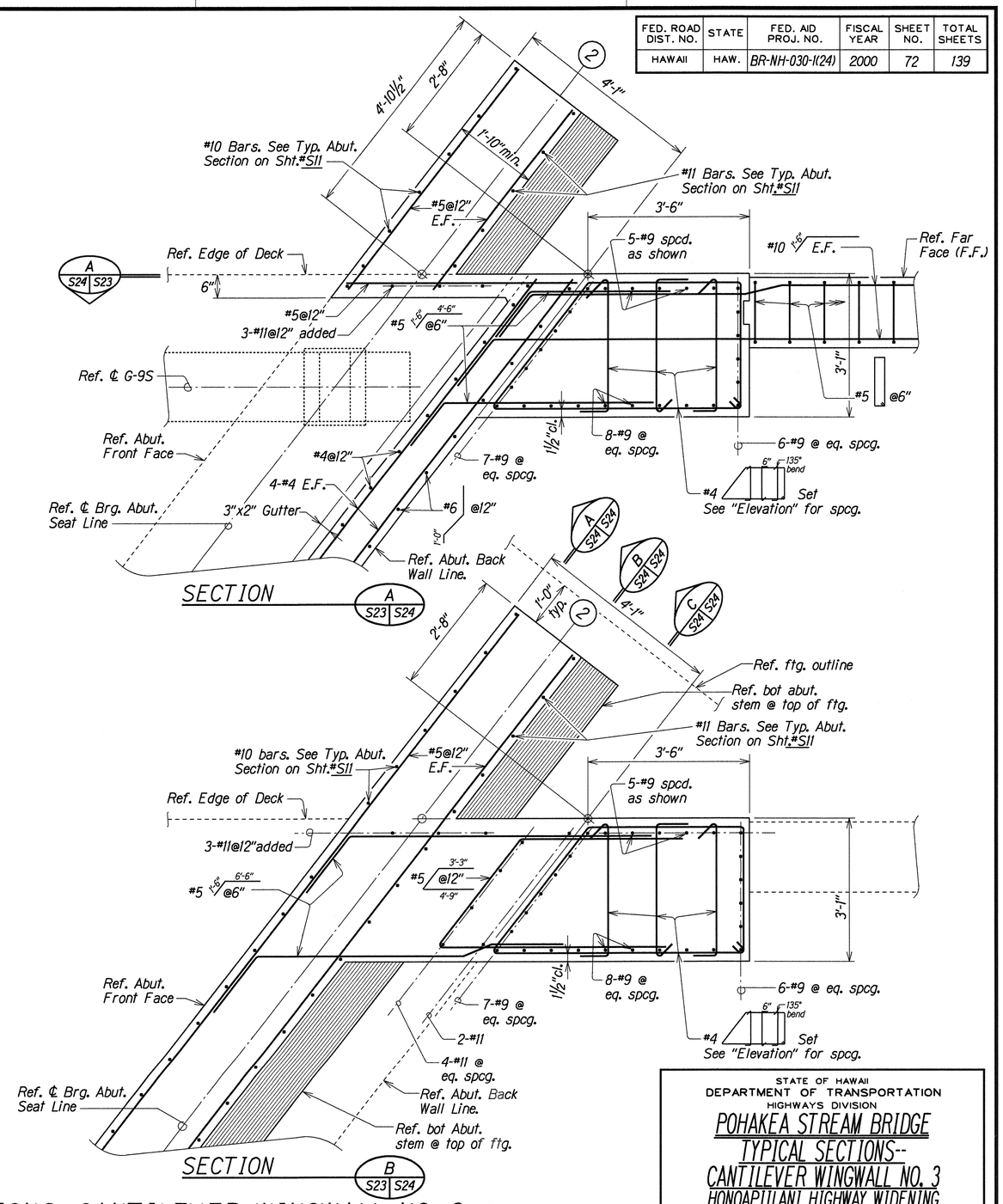

ORIGINAL PLAN	SURVEY PLOTTED BY	KSG	DATE
	DRAWN BY		DEC. 1998
	TRACED BY	SK	DEC. 1998
NOTE BOOK	DESIGNED BY	SK	DEC. 1998
	QUANTITIES BY	DCO	DEC. 1998
notnk. 874.04	CHECKED BY		

TYPICAL SECTIONS--CANTILEVER WINGWALL NO. 3

AT ABUTMENT NO. 2--SB LANES

Scale: 3/4" = 1'-0"

STATE OF HAWAII
DEPARTMENT OF TRANSPORTATION
HIGHWAYS DIVISION

POHAKEA STREAM BRIDGE
TYPICAL SECTIONS--
CANTILEVER WINGWALL NO. 3
HONOAPIILANI HIGHWAY WIDENING
North Kihei Road to Kuihelani Highway
Fed. Aid Proj. No. BR-NH-030-1(24)

Scale: As Noted Date: Dec. 1998

SHEET No. S24 OF 37 SHEETS

FED. ROAD DIST. NO.	STATE	FED. AID PROJ. NO.	FISCAL YEAR	SHEET NO.	TOTAL SHEETS
HAWAII	HAW.	BR-NH-030-1(24)	2000	73	139

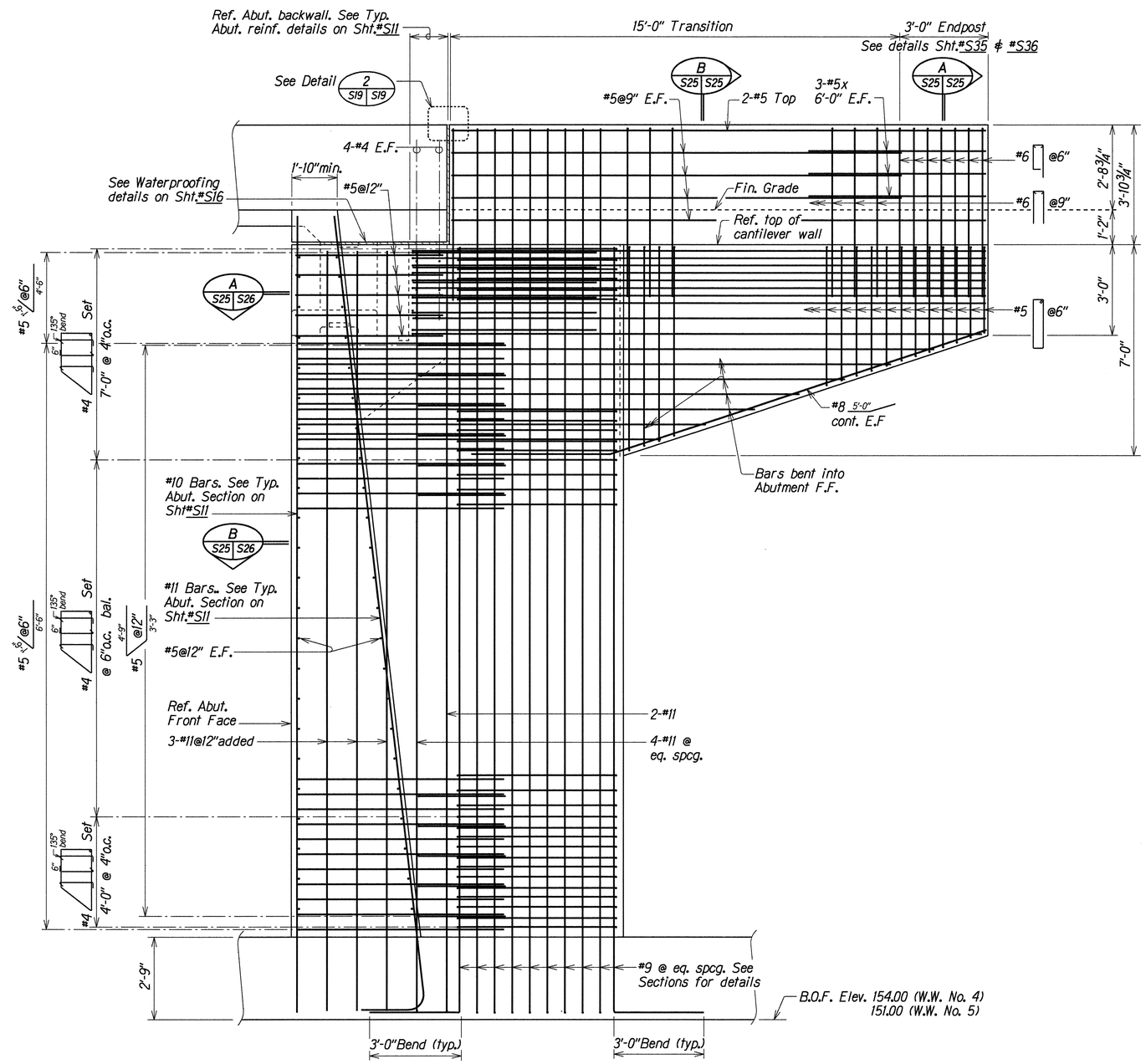

SECTION A S26 S25
Scale: ½" = 1'-0"

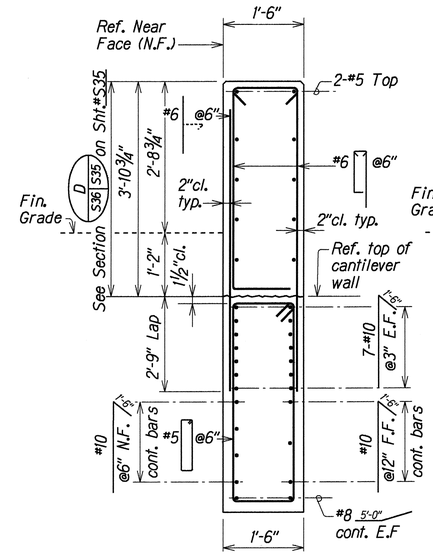

SECTION A S25 S25
Scale: ¾" = 1'-0"

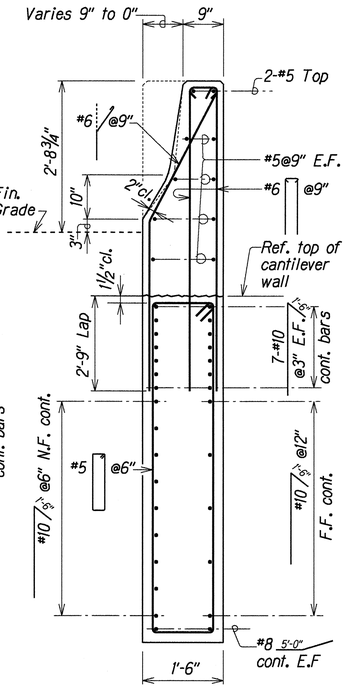

SECTION B S25 S25
Scale: ¾" = 1'-0"

ORIGINAL PLAN	SURVEY PLOTTED BY	KSG	DATE
	DRAWN BY		DEC 1998
	TRACED BY		
NOTE BOOK	DESIGNED BY	SK	DEC 1998
	QUANTITIES BY	SK	DEC 1998
	CHECKED BY	DOO	DEC 1998

CANTILEVER WINGWALL NOS. 4 and 5 DETAILS

at ABUTMENT NO. 2--SB LANES (W.W. NO. 4), at ABUTMENT NO. 1--NB LANES (W.W. NO. 5)

STATE OF HAWAII
DEPARTMENT OF TRANSPORTATION
HIGHWAYS DIVISION

POHAKEA STREAM BRIDGE
CANTILEVER WINGWALL NOS. 4 and 5 DETAILS
HONOAPIILANI HIGHWAY WIDENING
North Kihei Road to Kuihelani Highway
Fed. Aid Proj. No. BR-NH-030-1(24)

Scale: As Noted Date: Dec. 1998

SHEET No. S25 OF 37 SHEETS

FED. ROAD DIST. NO.	STATE	FED. AID PROJ. NO.	FISCAL YEAR	SHEET NO.	TOTAL SHEETS
HAWAII	HAW.	BR-NH-030-1(24)	2000	74	139

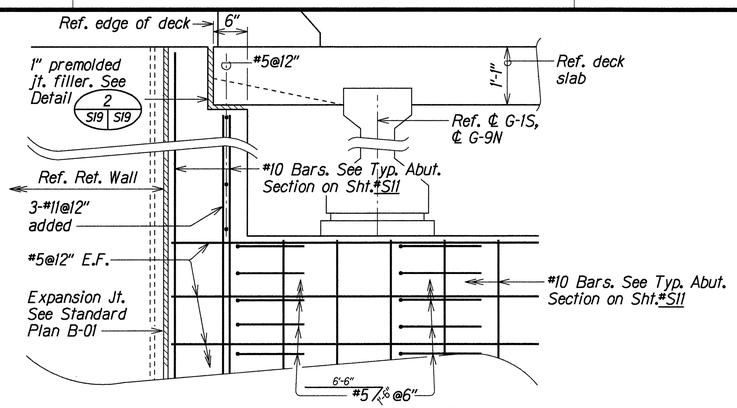

SECTION A S26 S26
Scale: 3/4" = 1'-0"

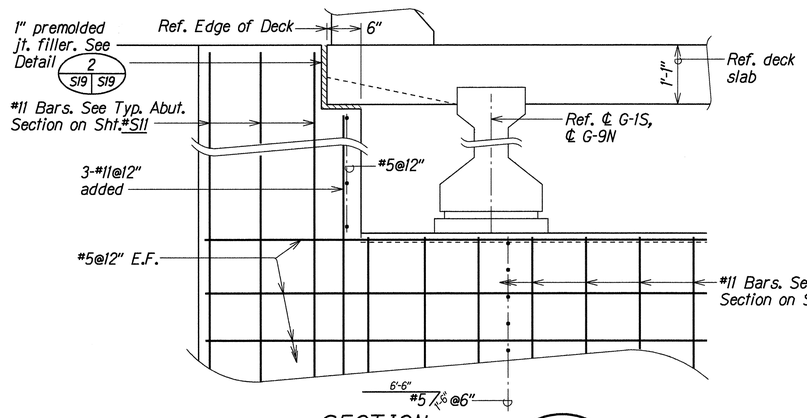

SECTION B S26 S26
Scale: 3/4" = 1'-0"

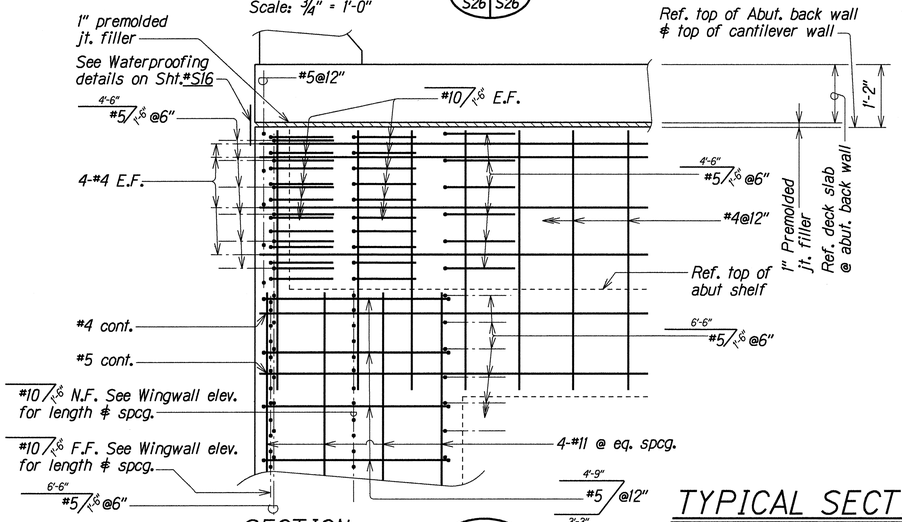

SECTION C S26 S26
Scale: 3/4" = 1'-0"

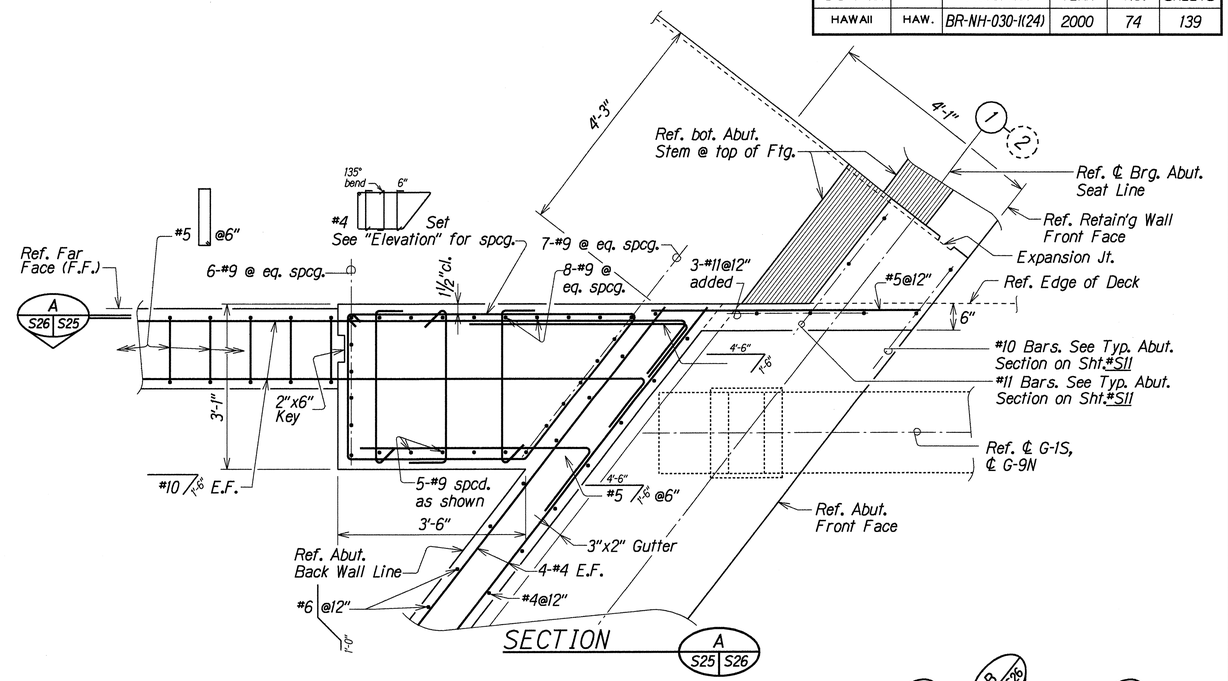

SECTION A S25 S26

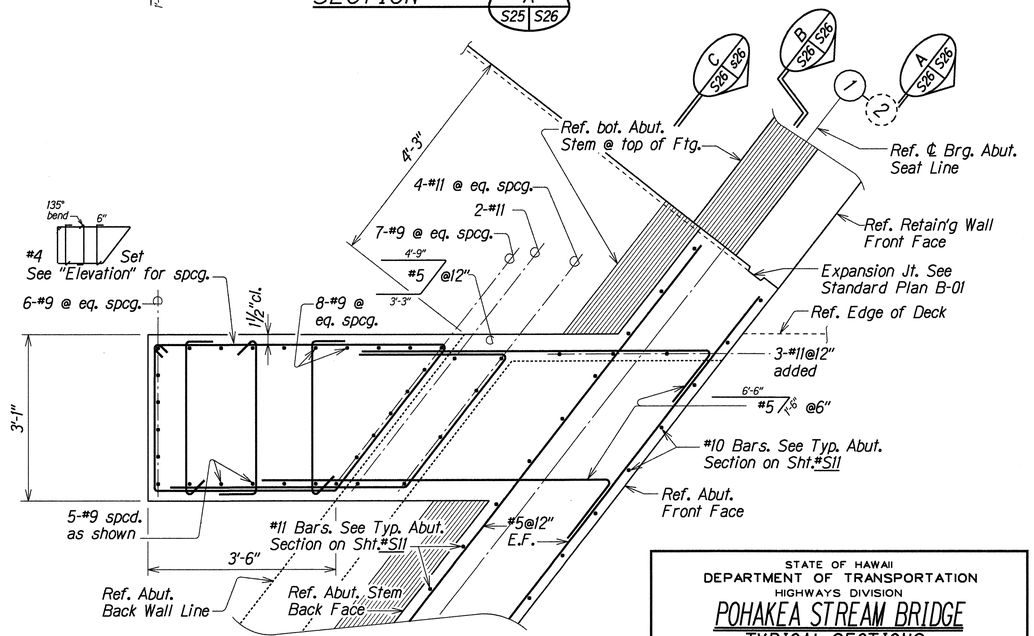

SECTION B S25 S26

TYPICAL SECTIONS--CANTILEVER WINGWALL NOS. 4 and 5

at ABUT. NO. 2--SB LANES (WW NO. 4), at ABUT. NO. 1--NB LANES (WW NO. 5)

Scale: 3/4" = 1'-0"

STATE OF HAWAII
DEPARTMENT OF TRANSPORTATION
HIGHWAYS DIVISION

POHAKEA STREAM BRIDGE
TYPICAL SECTIONS--
CANTILEVER WINGWALL NOS. 4 and 5
HONOAPIILANI HIGHWAY WIDENING
North Kihei Road to Kuihelani Highway
Fed. Aid Proj. No. BR-NH-030-1(24)

Scale: As Noted — Date: Dec. 1998

SHEET No. S26 OF 37 SHEETS

ORIGINAL PLAN		
SURVEY PLOTTED BY	KSG	DATE
DRAWN BY		DEC 1998
TRACED BY		DEC 1998
NOTE BOOK	SK	DEC 1998
TRANSCRIBED BY	SK	DEC 1998
QUANTITIES BY	DCO	DEC 1998
CHECKED BY		

nakhok_s26.dgn

FED. ROAD DIST. NO.	STATE	FED. AID PROJ. NO.	FISCAL YEAR	SHEET NO.	TOTAL SHEETS
HAWAII	HAW.	BR-NH-030-1(24)	2000	75	139

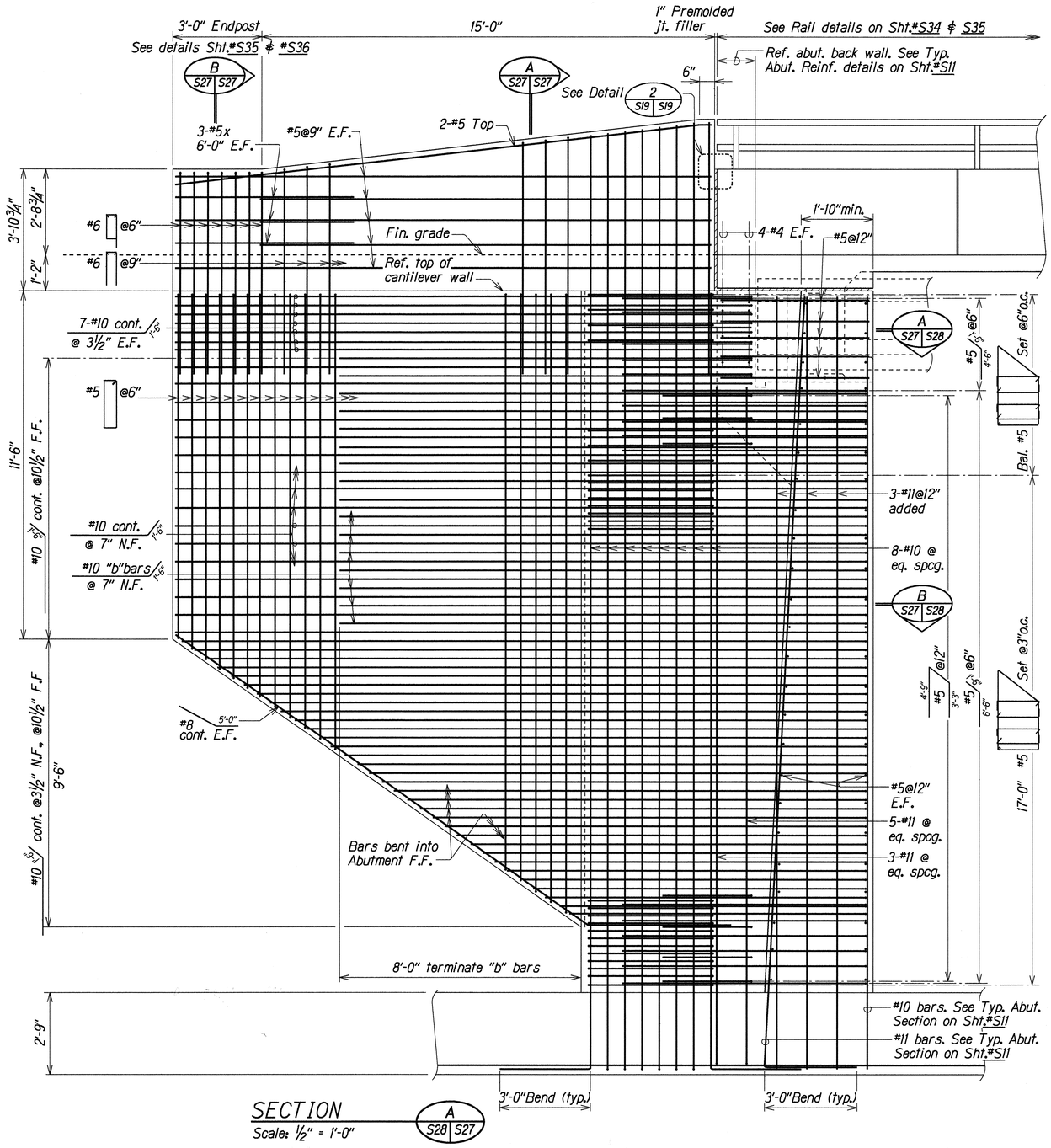

SECTION A S28 S27
Scale: ½" = 1'-0"

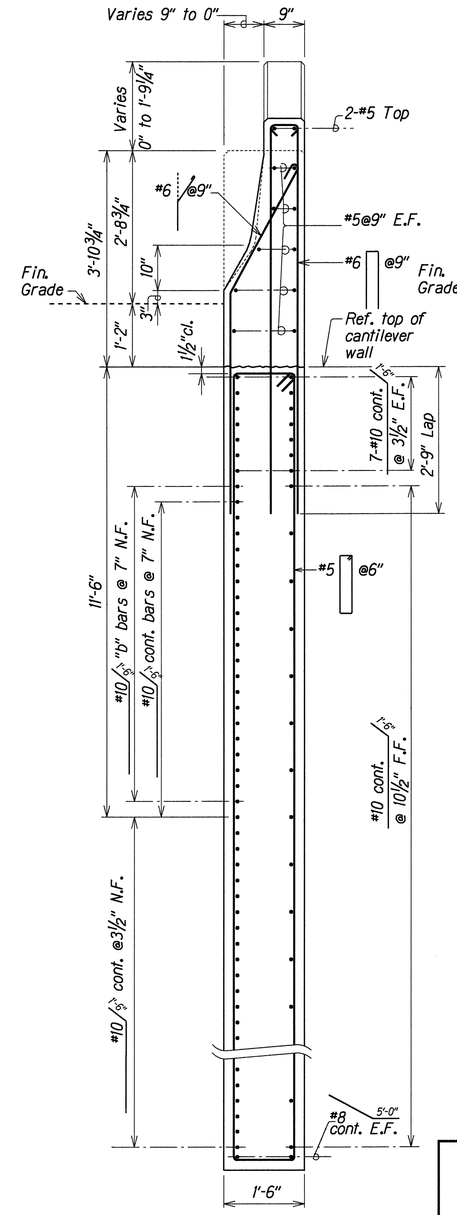

SECTION A S27 S27
Scale: ¾" = 1'-0"

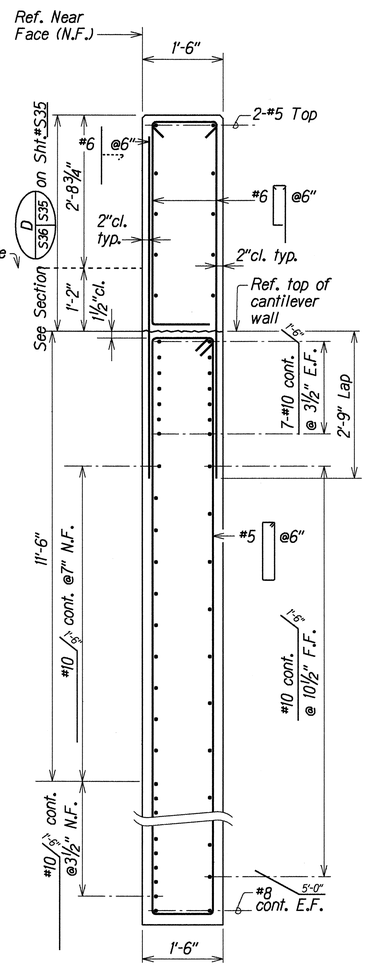

SECTION B S27 S27
Scale: ¾" = 1'-0"

ORIGINAL PLAN	SURVEY PLOTTED BY KSG	DATE DEC 1998
	DRAWN BY	DEC 1998
NOTE BOOK	TRACED BY SK	DEC 1998
	DESIGNED BY SK	DEC 1998
nphbk_s27	QUANTITIES BY	
	CHECKED BY DCO	DEC 1998

STATE OF HAWAII
DEPARTMENT OF TRANSPORTATION
HIGHWAYS DIVISION

POHAKEA STREAM BRIDGE
CANTILEVER WINGWALL NO. 6 DETAILS
HONOAPIILANI HIGHWAY WIDENING
North Kihei Road to Kuihelani Highway
Fed. Aid Proj. No. BR-NH-030-1(24)

Scale: As Noted — Date: Dec, 1998

SHEET No. S27 OF 37 SHEETS

CANTILEVER WINGWALL NO. 6 DETAILS
AT ABUTMENT NO. 1--NB LANES

FED. ROAD DIST. NO.	STATE	FED. AID PROJ. NO.	FISCAL YEAR	SHEET NO.	TOTAL SHEETS
HAWAII	HAW.	BR-NH-030-1(24)	2000	76	139

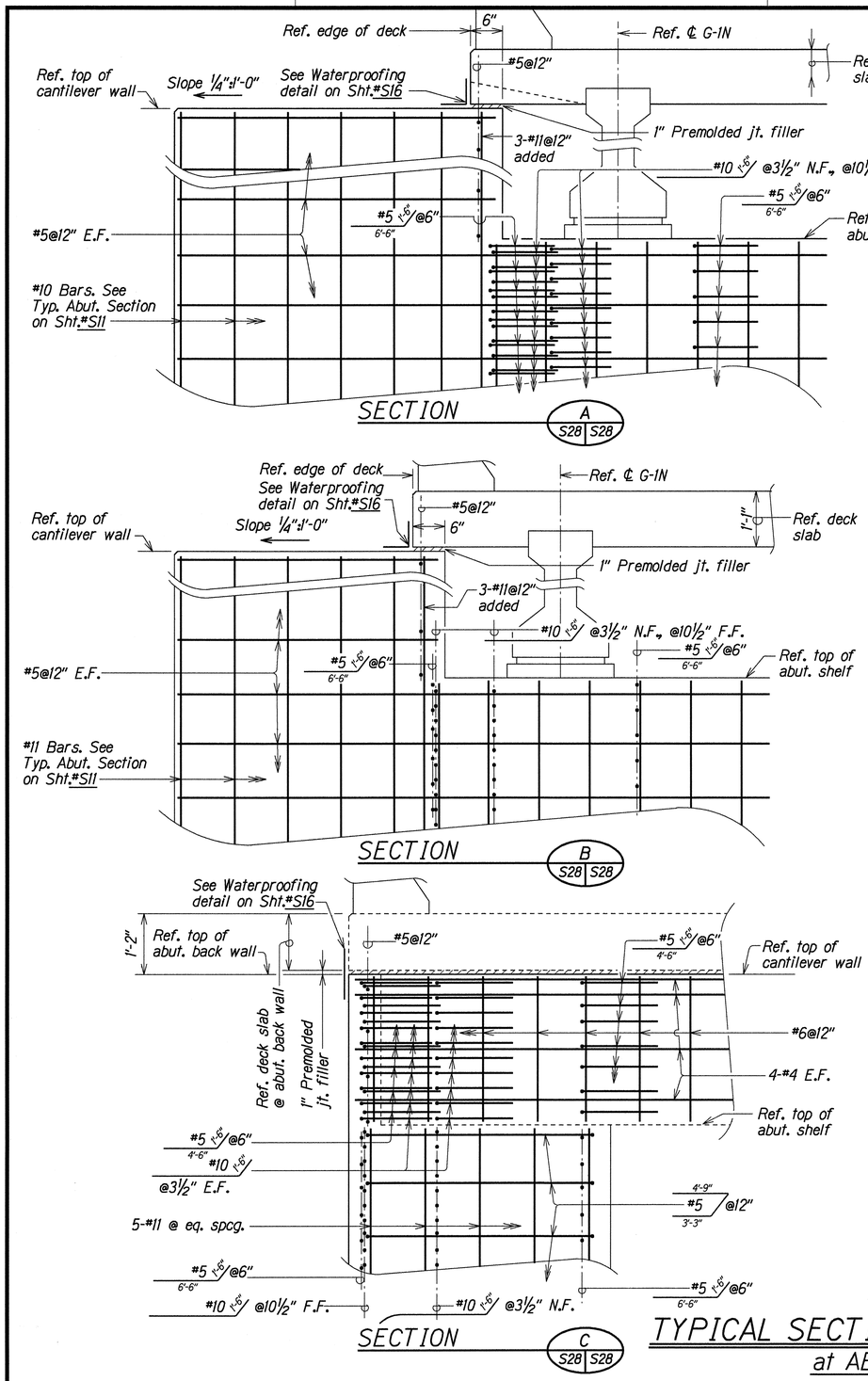

TYPICAL SECTIONS--CANTILEVER WINGWALL NO. 6

at ABUTMENT NO. 1--NB LANES

Scale: 3/4" = 1'-0"

ORIGINAL PLAN	SURVEY PLOTTED BY	KSG	DATE DEC. 1998
	DRAWN BY		
	TRACED BY	SK	DEC. 1998
NOTE BOOK	DESIGNED BY	SK	DEC. 1998
	QUANTITIES BY	DCO	DEC. 1998
Nohoik S28	CHECKED BY		

STATE OF HAWAII
DEPARTMENT OF TRANSPORTATION
HIGHWAYS DIVISION

POHAKEA STREAM BRIDGE
TYPICAL SECTIONS--
CANTILEVER WINGWALL NO. 6
HONOAPIILANI HIGHWAY WIDENING
North Kihei Road to Kuihelani Highway
Fed. Aid Proj. No. BR-NH-030-1(24)

Scale: As Noted Date: Dec. 1998

SHEET No. S28 OF 37 SHEETS

FED. ROAD DIST. NO.	STATE	FED. AID PROJ. NO.	FISCAL YEAR	SHEET NO.	TOTAL SHEETS
HAWAII	HAW.	BR-NH-030-1(24)	2000	77	139

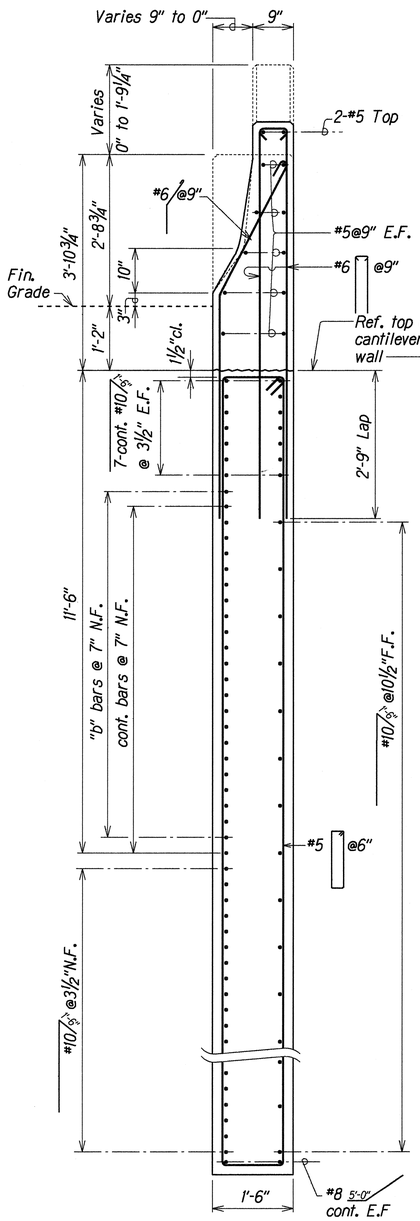

SECTION
Scale: ¾" = 1'-0"
A S29 S29

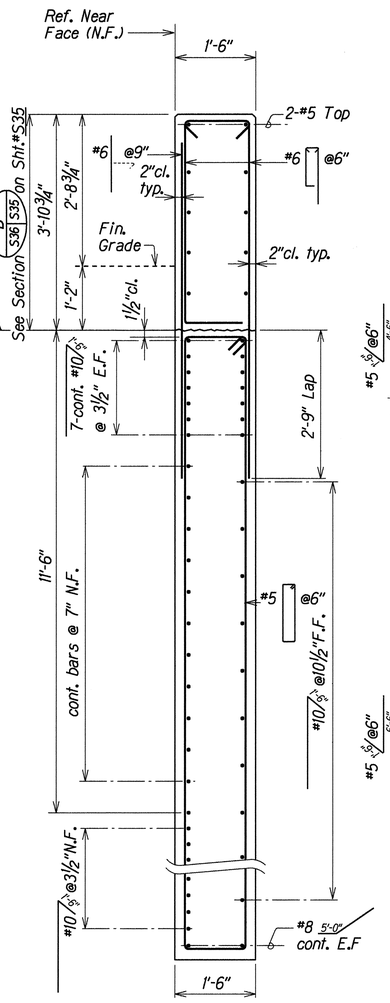

SECTION
Scale: ¾" = 1'-0"
B S29 S29

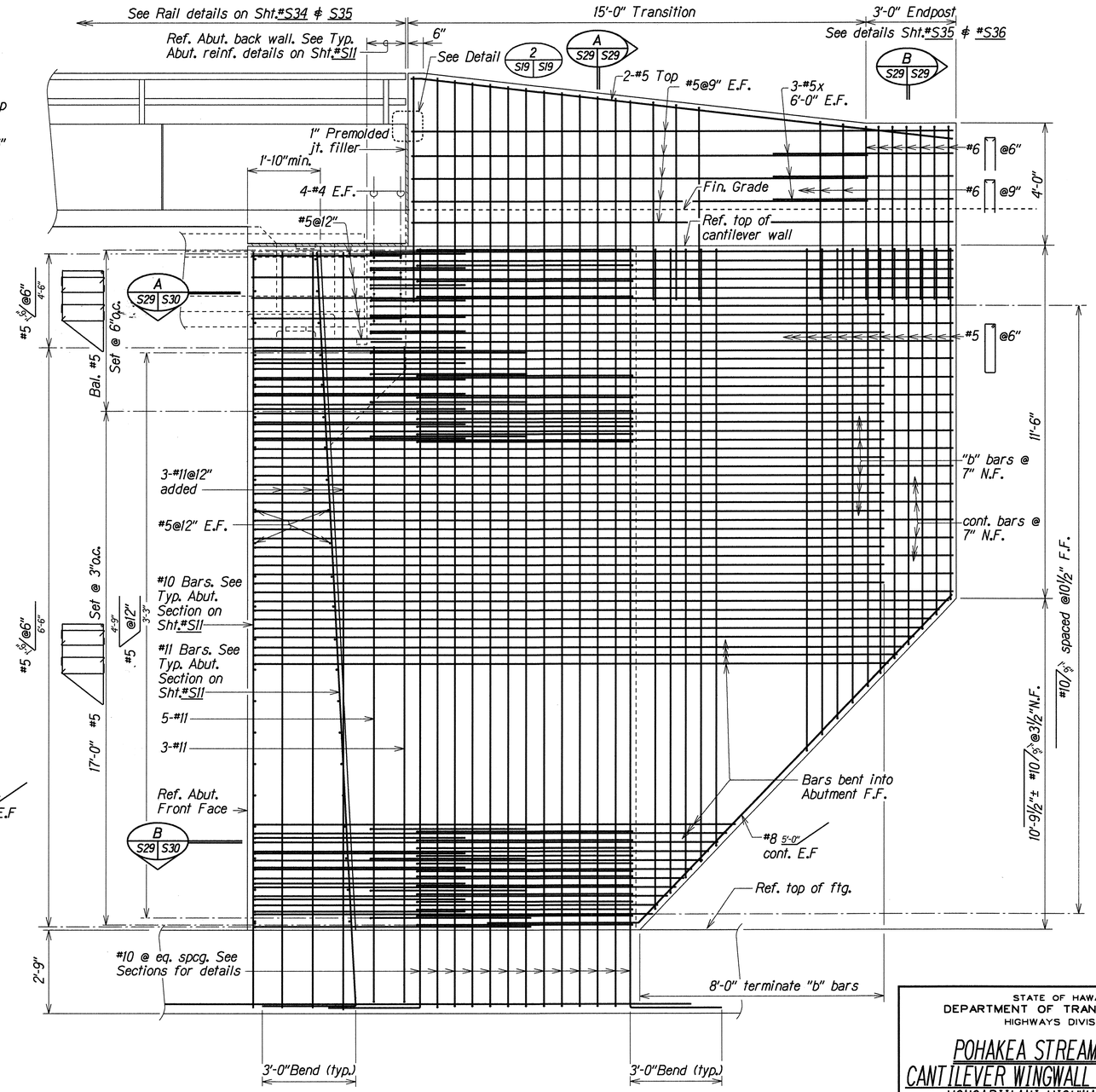

SECTION
Scale: ½" = 1'-0"
A S30 S29

ORIGINAL PLAN	SURVEY PLOTTED BY	KSG	DATE DEC 1998
	DRAWN BY		" "
	TRACED BY	SK	DEC 1998
NOTE BOOK	DESIGNED BY	SK	DEC 1998
	QUANTITIES BY		" "
nohoka_s29.dgn	CHECKED BY	DCO	DEC 1998

CANTILEVER WINGWALL NO. 8 DETAILS
at ABUTMENT NO. 2--NB LANES

STATE OF HAWAII
DEPARTMENT OF TRANSPORTATION
HIGHWAYS DIVISION

POHAKEA STREAM BRIDGE
CANTILEVER WINGWALL NO. 8 DETAILS
HONOAPIILANI HIGHWAY WIDENING
North Kihei Road to Kuihelani Highway
Fed. Aid Proj. No. BR-NH-030-1(24)

Scale: As Noted — Date: Dec. 1998

SHEET No. S29 OF 37 SHEETS

FED. ROAD DIST. NO.	STATE	FED. AID PROJ. NO.	FISCAL YEAR	SHEET NO.	TOTAL SHEETS
HAWAII	HAW.	BR-NH-030-1(24)	2000	78	139

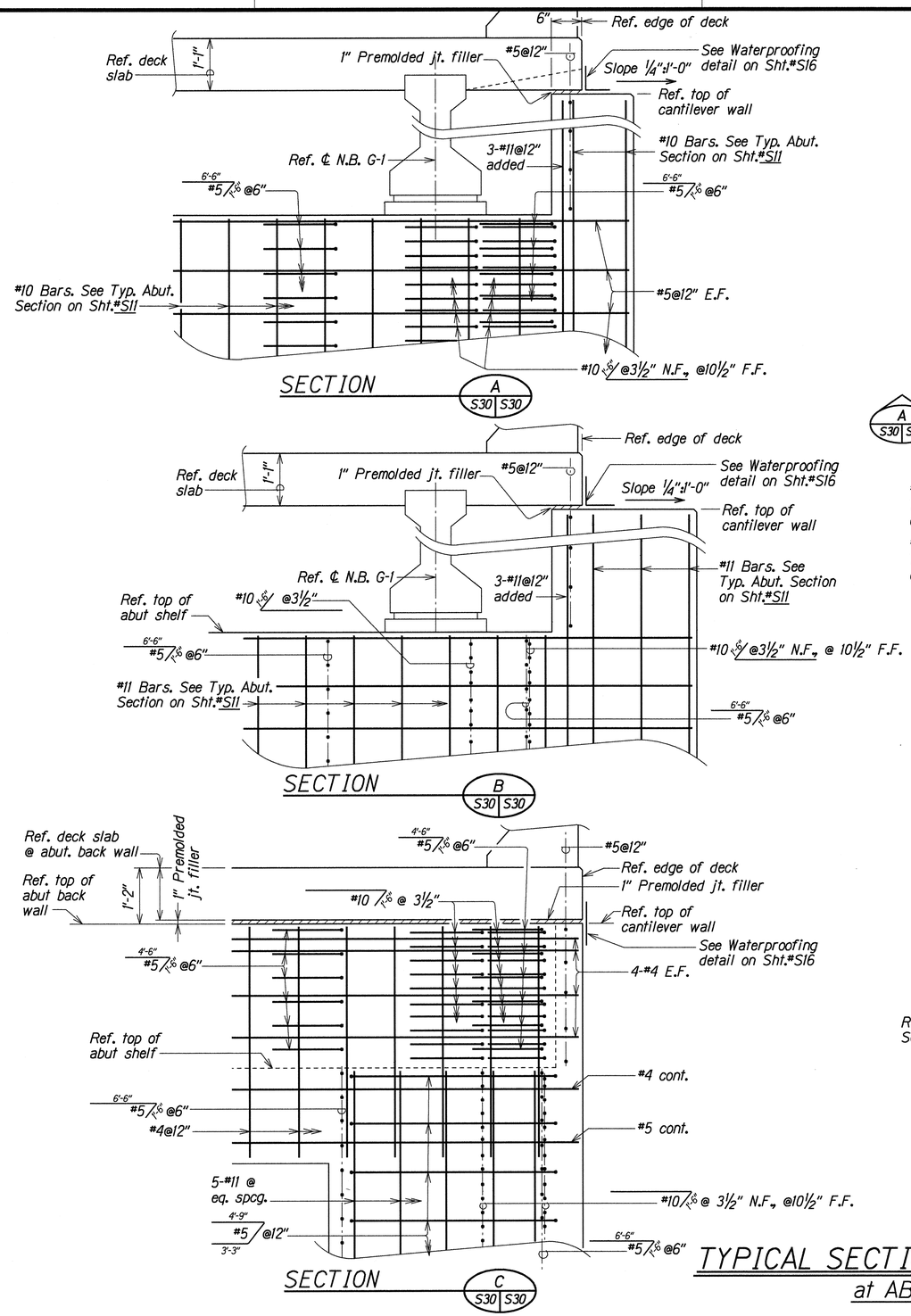

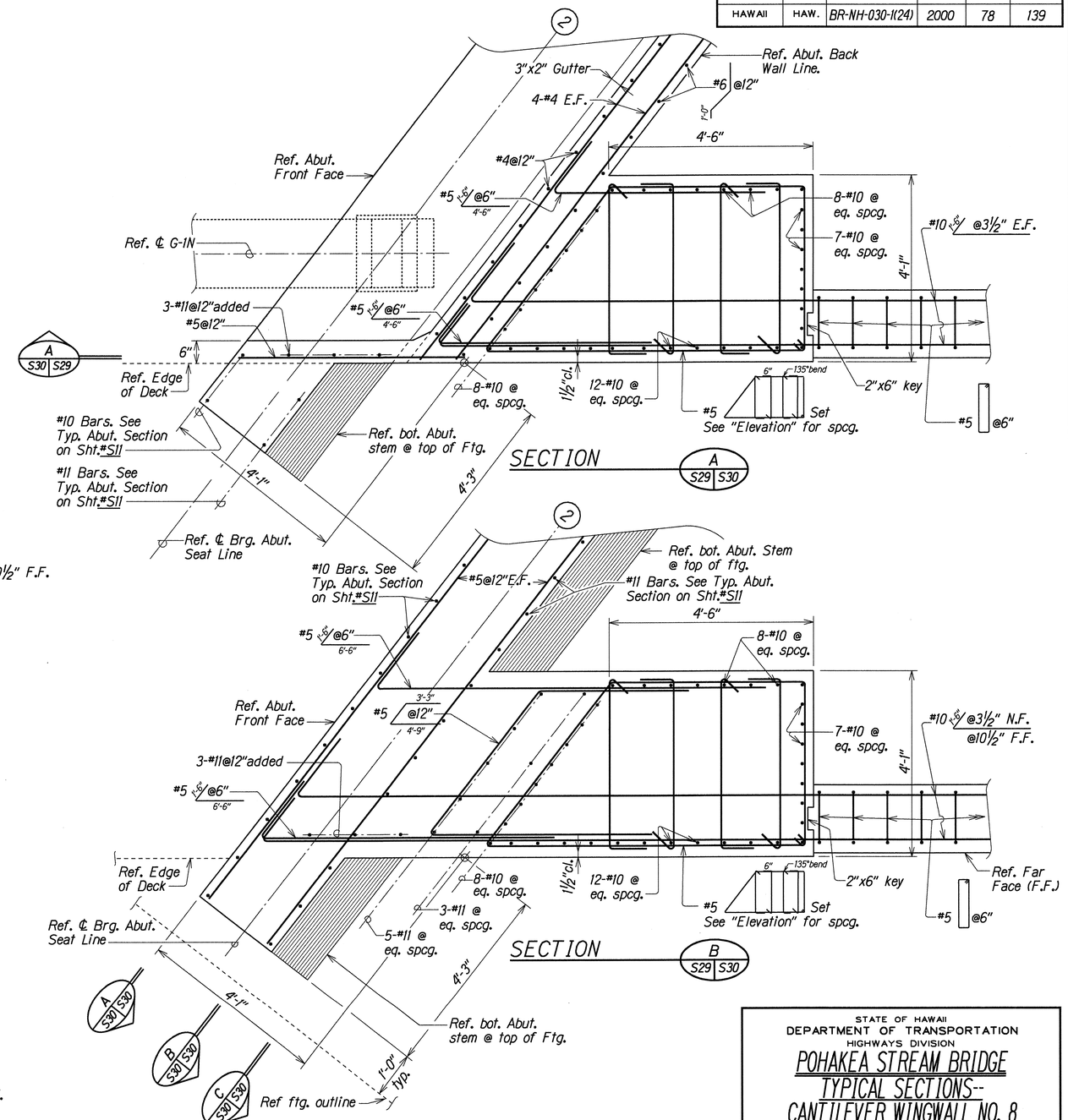

TYPICAL SECTIONS--CANTILEVER WINGWALL NO. 8

at ABUTMENT NO. 2--NB LANES

Scale: 3/4" = 1'-0"

STATE OF HAWAII
DEPARTMENT OF TRANSPORTATION
HIGHWAYS DIVISION

POHAKEA STREAM BRIDGE
TYPICAL SECTIONS--
CANTILEVER WINGWALL NO. 8
HONOAPIILANI HIGHWAY WIDENING
North Kihei Road to Kuihelani Highway
Fed. Aid Proj. No. BR-NH-030-1(24)

Scale: As Noted — Date: Dec. 1998

SHEET No. S30 OF 37 SHEETS

ORIGINAL PLAN			DATE
	SURVEY PLOTTED BY	KSG	DEC 1998
	DRAWN BY		
	TRACED BY	SK	DEC 1998
NOTE BOOK	DESIGNED BY	SK	DEC 1998
	QUANTITIES BY	DOO	DEC 1998
	CHECKED BY		

Aplink S30.dgn

FED. ROAD DIST. NO.	STATE	FED. AID PROJ. NO.	FISCAL YEAR	SHEET NO.	TOTAL SHEETS
HAWAII	HAW.	BR-NH-030-1(24)	2000	79	139

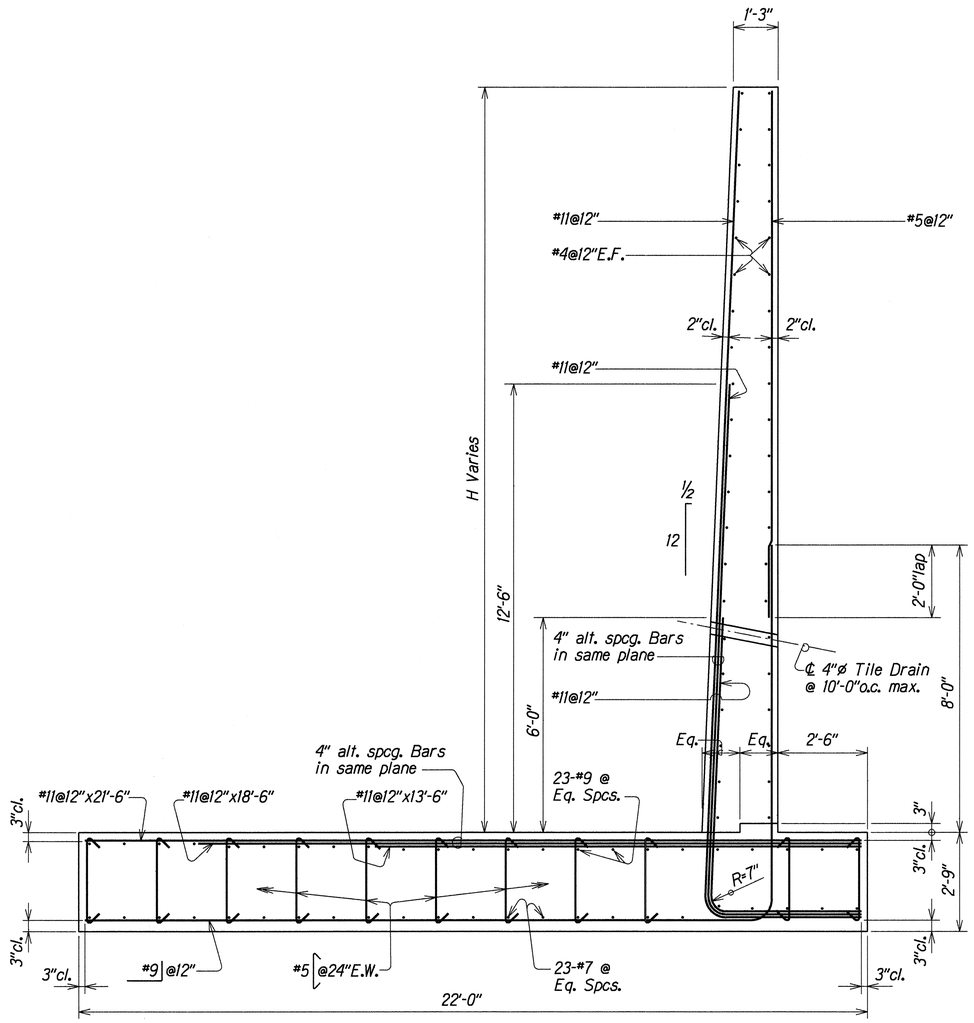

TYPICAL SECTION--RETAINING WALL NO. 1 and NO. 2

A
S10 | S31

Scale: 1/2" = 1'-0"

ORIGINAL PLAN	SURVEY PLOTTED BY	KSG	DATE DEC 1998
	DRAWN BY		
	TRACED BY		DEC 1998
NOTE BOOK	DESIGNED BY	SK	DEC 1998
	QUANTITIES BY	SK	DEC 1998
40bhk S31.dgn	CHECKED BY	DCO	DEC 1998

STATE OF HAWAII
DEPARTMENT OF TRANSPORTATION
HIGHWAYS DIVISION

POHAKEA STREAM BRIDGE
TYPICAL SECTION--RETAINING WALL NO. 1 and NO. 2
HONOAPIILANI HIGHWAY WIDENING
North Kihei Road to Kuihelani Highway
Fed. Aid Proj. No. BR-NH-030-1(24)

Scale: As Noted Date: Dec. 1998

SHEET No. S31 OF 37 SHEETS

FED. ROAD DIST. NO.	STATE	FED. AID PROJ. NO.	FISCAL YEAR	SHEET NO.	TOTAL SHEETS
HAWAII	HAW.	BR-NH-030-1(24)	2000	80	139

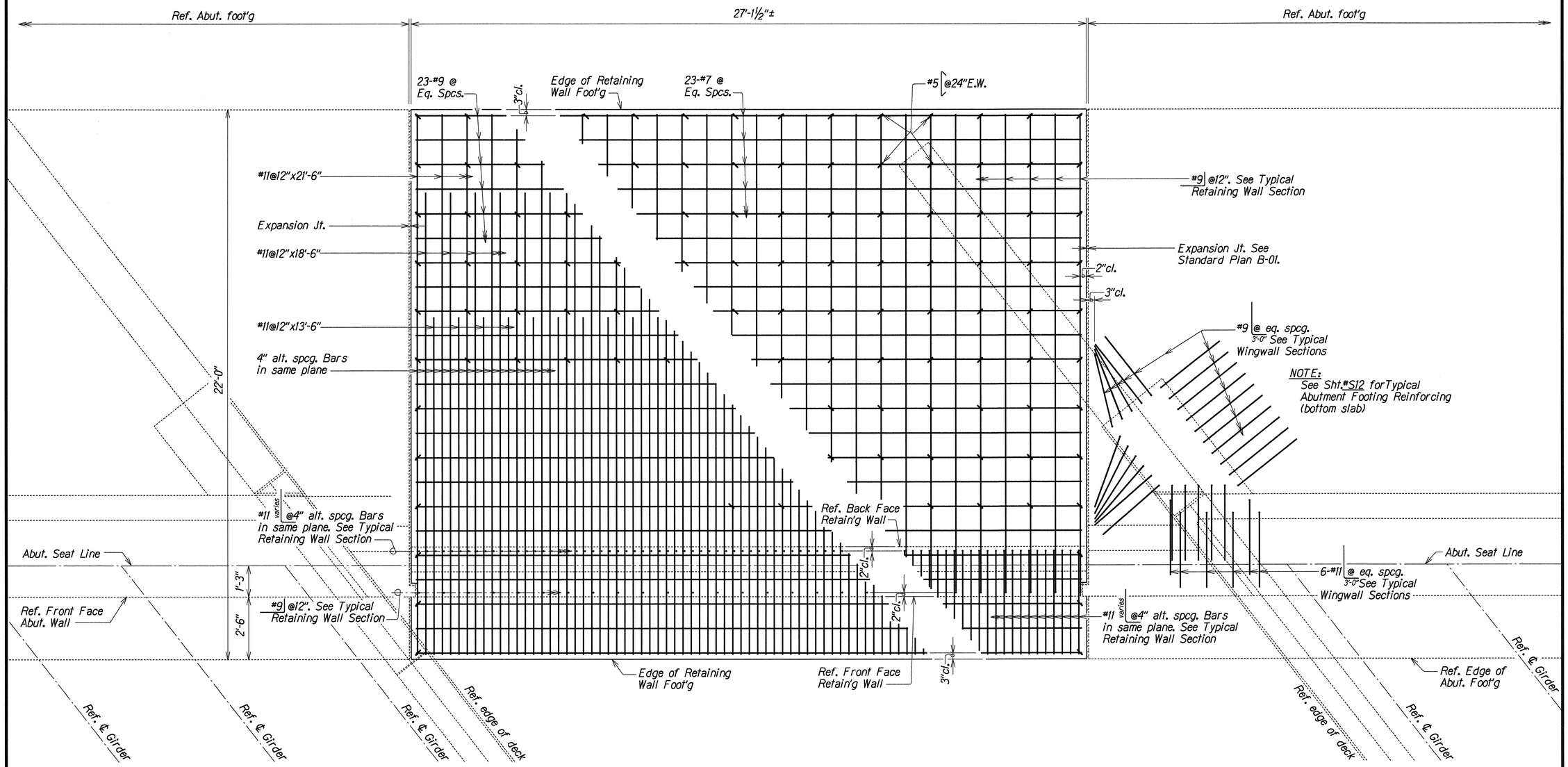

TOP SLAB REINFORCING

BOTTOM SLAB REINFORCING

PLAN--TYPICAL FOOTING REINFORCING ARRANGEMENT
RETAINING WALL NO. 1 and NO. 2

Scale: ½" = 1'-0"

ORIGINAL PLAN	SURVEY PLOTTED BY	KSS	DATE	DEC 1998
	DRAWN BY			
	TRACED BY	SK		DEC 1998
NOTE BOOK	DESIGNED BY	SK		DEC 1998
	QUANTITIES BY	SK		DEC 1998
nohok s32.dgn	CHECKED BY	DOD		DEC 1998

STATE OF HAWAII
DEPARTMENT OF TRANSPORTATION
HIGHWAYS DIVISION

POHAKEA STREAM BRIDGE
TYPICAL FOOTING PLAN REINFORCING--
RETAINING WALL NO. 1 and NO. 2
HONOAPIILANI HIGHWAY WIDENING
North Kihei Road to Kuihelani Highway
Fed. Aid Proj. No. BR-NH-030-1(24)

Scale: As Noted Date: Dec. 1998

SHEET No. S32 OF 37 SHEETS

FED. ROAD DIST. NO.	STATE	FED. AID PROJ. NO.	FISCAL YEAR	SHEET NO.	TOTAL SHEETS
HAWAII	HAW.	BR-NH-030-1(24)	2000	81	139

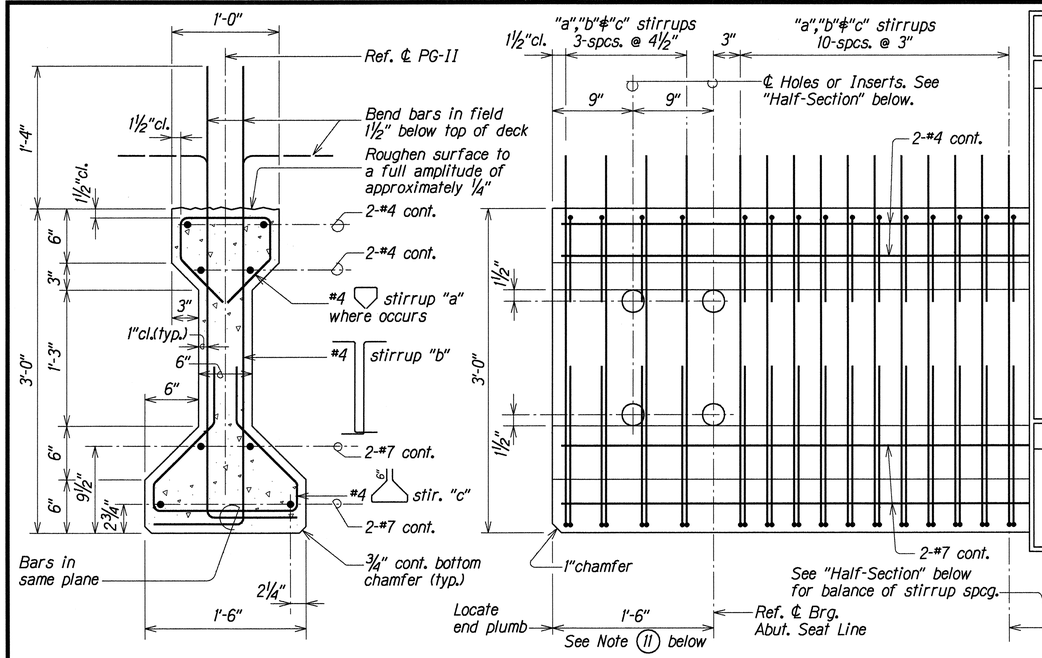

TYPICAL PRESTRESSED CONCRETE GIRDER TYPE PG-II

Not to Scale

ELEVATION -- TYPE PG-II GIRDER END DETAILS

Not to Scale

BUNDLING OF PRESTRESSED REINFORCEMENT

ARRANGEMENT AND CLEARANCE FOR PRETENSIONED STRANDS

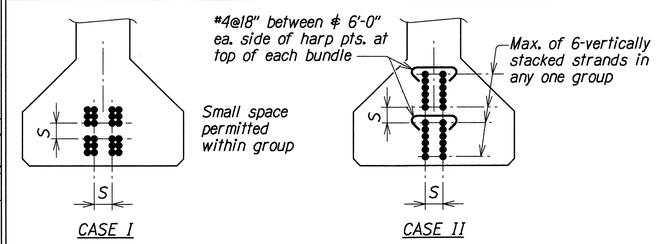

1. Strands may be bundled in groups as shown.
2. The minimum distance "S" between groups or individual strands = 2" for ½"ø strands.
3. "S" is measured between centers of adjacent strands.

ARRANGEMENT AND CLEARANCE FOR POST TENSIONED STRANDS

1. Horizontal clearance between units equals 2"min.
2. Units may be bundled vertically in groups of 3"min.
3. Vertical clearance between bundled units equal 3"min.
4. Approval of the Engineer is required for deviation.

BEAM SCHEDULE

Girder Type (AASHTO)	Initial Prestress Force (kips)	Working Force (kips) *	Calculated Camber See Note 1	Dead Load Deflection See Note 2	Location of Center of Gravity of Prestress Force			Required Min. Ultimate Conc. Strength Before Release of Strands (p.s.i.)	Northbound and Southbound Girder Locations
					Distance "A"	Distance "B"	Dist. "C" to Pt. of Drape		
II	625.00	532.51	2⅜"	-13/16"	10½"	6'-8"	5"	5,000	G-1 thru G-9

* Effective prestress force after all losses

GIRDER CAMBER NOTES

1. The calculated camber includes the effect of the initial prestress force and the weight of the girder after removal from the bed. Positive values shown for calculated camber indicate a net upward deflection. The calculated camber value has been multiplied by a factor of 1.8 to approximate the effect of camber growth and concrete creep. The actual camber shall not exceed the calculated camber by more than ⅜".
2. The dead load deflection includes the combined effects of the weight of slab, drop panels and diaphragms.
3. Contractor shall camber the deck formwork as required to account for the calculated dead load deflection in order to provide the specified finish deck elevations.
4. All cambers and deflections are in inches. A negative value indicates a downward deflection.

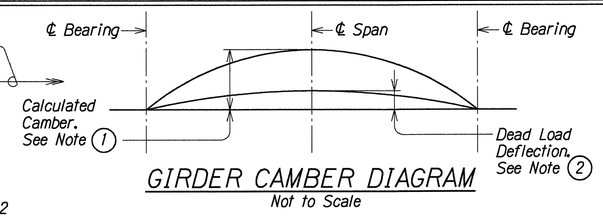

GIRDER CAMBER DIAGRAM

Not to Scale

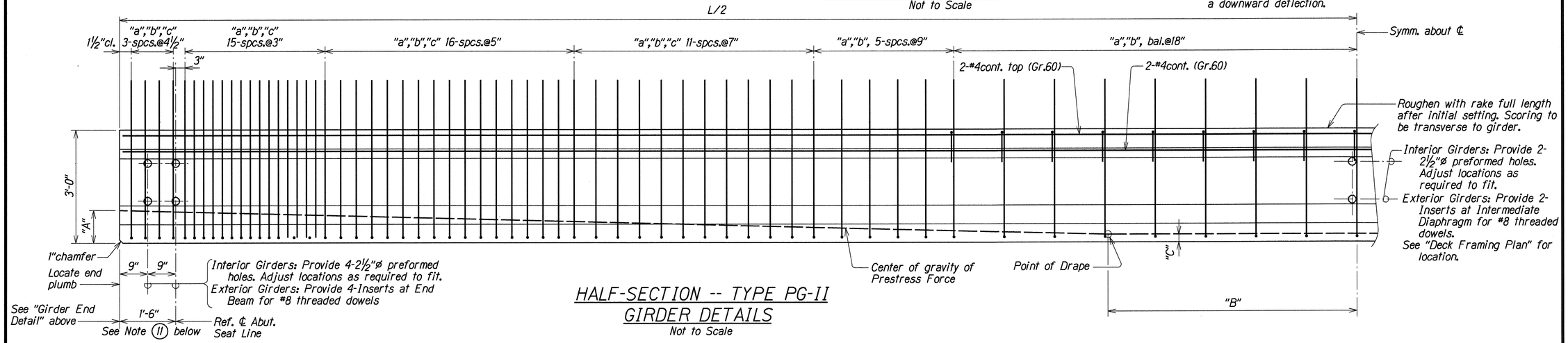

HALF-SECTION -- TYPE PG-II GIRDER DETAILS

Not to Scale

PRESTRESSED GIRDER NOTES:

1. Concrete shall have a minimum 28 days compressive strength of 6,000 p.s.i.
2. Pretensioned strands shall be 7-wire ½"ø stress-relieved steel strands (Area = 0.153 in) with an ultimate tensile strength of 270 K.S.I. for properties. See State Standard Specifications.
   Initial strand stress (before any lossed) = 189 K.S.I., Initial Loss = 20,000 P.S.I. Total loss due to creep, shrinkage, elastic shortening and relaxation of steel = 45,000 P.S.I.
3. Non-prestressed reinforcing steel shall be Grade 60 except stirrups. Ties shall be Grade 40 for properties. See State Standard Specifications.
4. Strand pattern shall be symmetrical about the longitudinal ℄ of the girder.
5. Strand release sequence shall not induce any lateral deflection of the girder.
6. Contractor shall submit shop drawings indicating proposed strand pattern, releasing sequence, reinforcing details and hold down device details to the Engineer prior to fabrication.
7. During curing, care shall be taken to avoid any lateral deflection of the girder due to improper orientation. Steam curing may be used to accelerate strength gain.
8. Lifting devices shall be placed as close as possible to the centerline of bearings of the girder. Details and locations of lifting devices shall be submitted to the Engineer for approval. Such approval does not relieve the Contractor of his responsibilities if beam is damaged due to failure of the lifting device.
9. See framing plans for locations of diaphragms and girder mark numbers.
10. The girder length does not take into account the elastic shortening of girder due to pretensioning force.
11. The Contractor shall verify that girder length will not be in conflict with abutment backwall front face.

ORIGINAL PLAN	SURVEY PLOTTED BY	KSG	DATE	DEC. 1998
	DRAWN BY			
	NOTE BOOK	TRACED BY	SK	DEC. 1998
		DESIGNED BY	SK	DEC. 1998
		QUANTITIES BY	SK	DEC. 1998
		CHECKED BY	DCO	DEC. 1998
	NB10K S33.dgn			

STATE OF HAWAII
DEPARTMENT OF TRANSPORTATION
HIGHWAYS DIVISION

POHAKEA STREAM BRIDGE
PRESTRESSED CONCRETE GIRDER DETAILS--TYPE PG-II
HONOAPIILANI HIGHWAY WIDENING
Kuihelani Highway to North Kihei Road
Fed. Aid Proj. No. BR-NH-030-1(24)

Scale: As Noted Date: Dec. 1998

SHEET No. S33 OF 37 SHEETS

FED. ROAD DIST. NO.	STATE	FED. AID PROJ. NO.	FISCAL YEAR	SHEET NO.	TOTAL SHEETS
HAWAII	HAW.	BR-NH-030-1(24)	2000	82	139

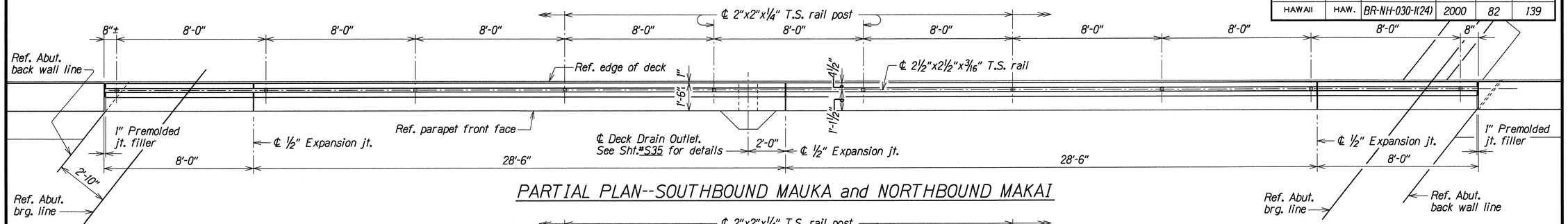

PARTIAL PLAN--SOUTHBOUND MAUKA and NORTHBOUND MAKAI

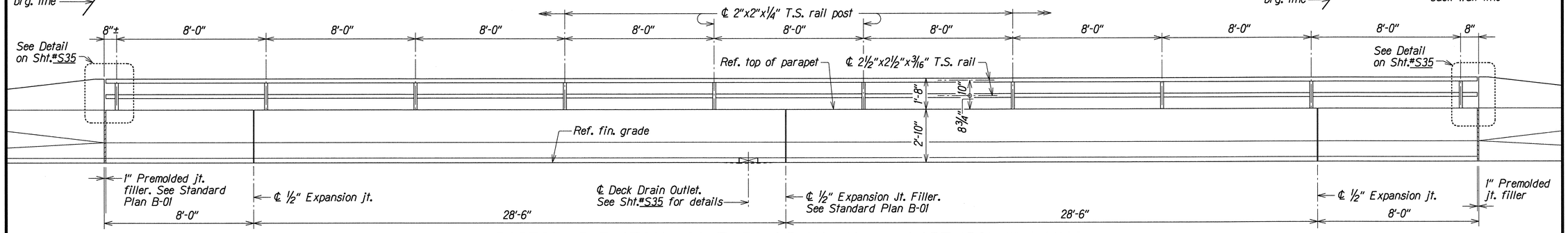

PARTIAL ELEVATION--SOUTHBOUND MAUKA and NORTHBOUND MAKAI

METAL TUBE STEEL RAIL ON CONCRETE PARAPET

Scale: 3/8" = 1'-0"

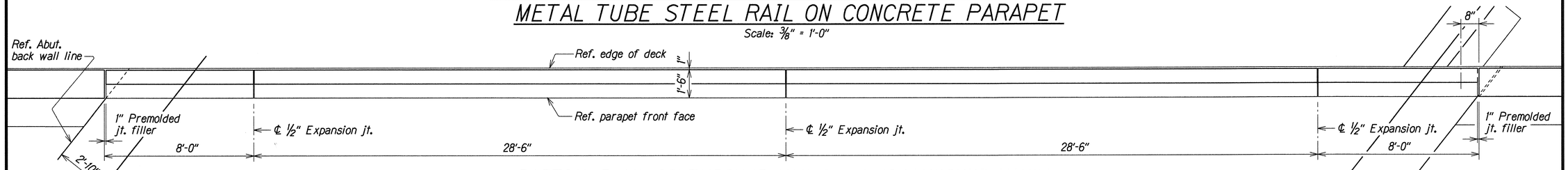

PARTIAL PLAN--SOUTHBOUND MAKAI and NORTHBOUND MAUKA

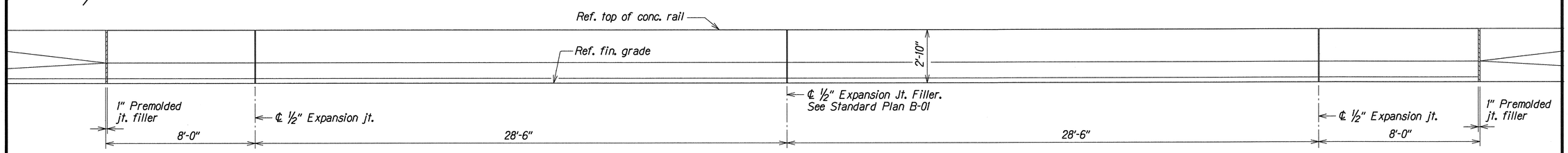

PARTIAL ELEVATION--SOUTHBOUND MAKAI and NORTHBOUND MAUKA

CONCRETE RAIL

Scale: 3/8" = 1'-0"

ORIGINAL PLAN	SURVEY PLOTTED BY KSC	DATE DEC 1998
	DRAWN BY	
	TRACED BY SK	DEC 1998
NOTE BOOK	DESIGNED BY SK	DEC 1998
	QUANTITIES BY DCO	DEC 1998
	CHECKED BY	

STATE OF HAWAII
DEPARTMENT OF TRANSPORTATION
HIGHWAYS DIVISION

POHAKEA STREAM BRIDGE
PLAN and ELEVATION--CONCRETE RAIL and METAL TUBE STEEL RAIL
HONOAPIILANI HIGHWAY WIDENING
Kuihelani Highway to North Kihei Road
Fed. Aid Proj. No. BR-NH-030-1(24)

Scale: As Noted — Date: Dec, 1998

SHEET No. S34 OF 37 SHEETS

FED. ROAD DIST. NO.	STATE	FED. AID PROJ. NO.	FISCAL YEAR	SHEET NO.	TOTAL SHEETS
HAWAII	HAW.	BR-NH-030-1(24)	2000	83	139

DECK DRAIN OPENING NOTES:

1. See adjacent Sections for further details.
2. Typical Bridge Deck Reinforcement not shown. See Sht.#S6
3. See Sht.#S34 for quantity and location of Deck Drain Opening

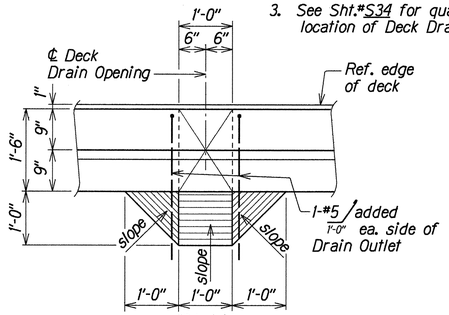

PLAN

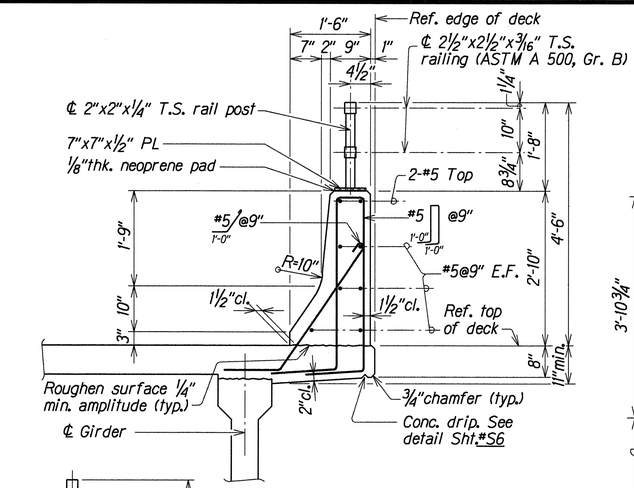

SECTION A (S36 | S35)
Scale: ¾" = 1'-0"

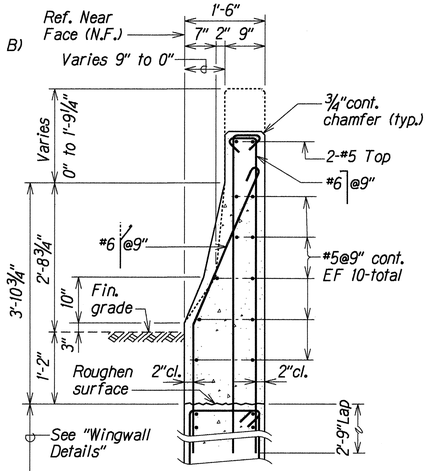

SECTION B (S36 | S35)
Scale: ¾" = 1'-0"

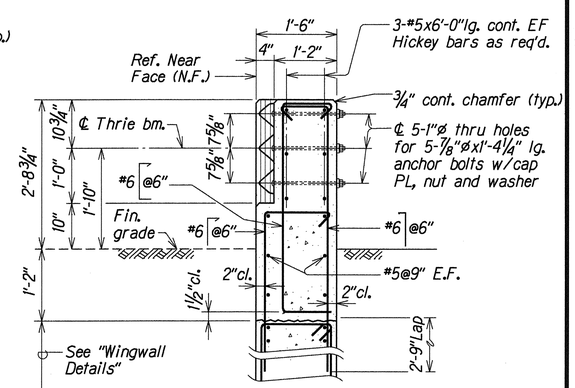

SECTION C (S36 | S35)
Scale: ¾" = 1'-0"

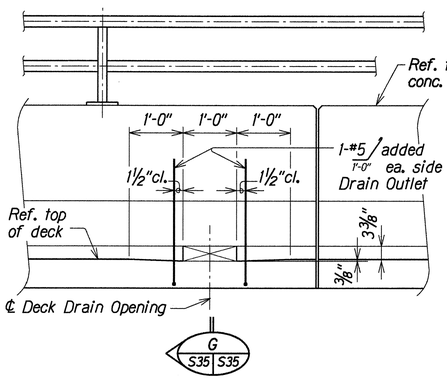

ELEVATION

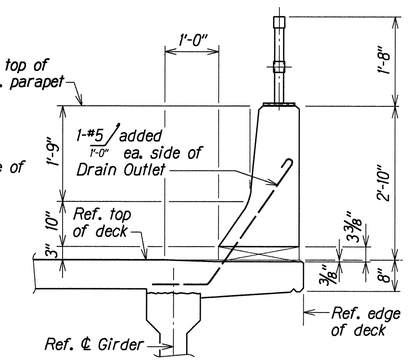

SECTION G (S35 | S35)

DECK DRAIN OUTLET DETAILS
Scale: ¾" = 1'-0"

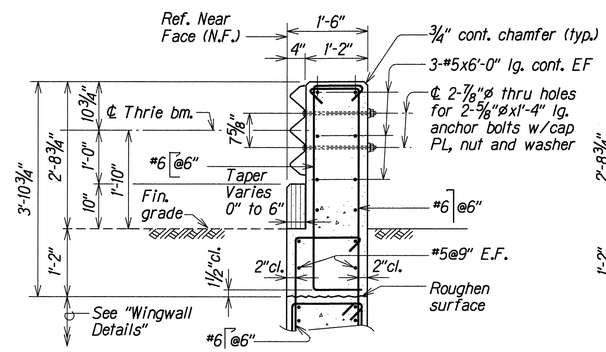

SECTION D (S36 | S35)
Scale: ¾" = 1'-0"

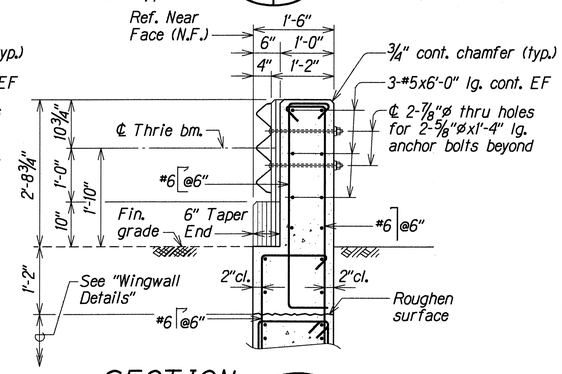

SECTION E (S36 | S35)
Scale: ¾" = 1'-0"

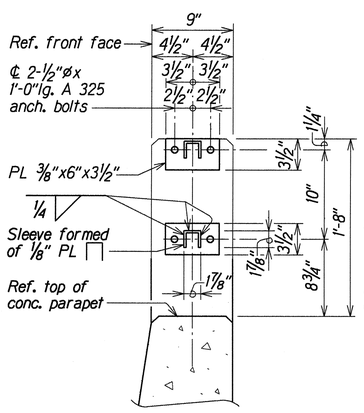

SECTION E (S35 | S35)
Scale: 1½" = 1'-0"

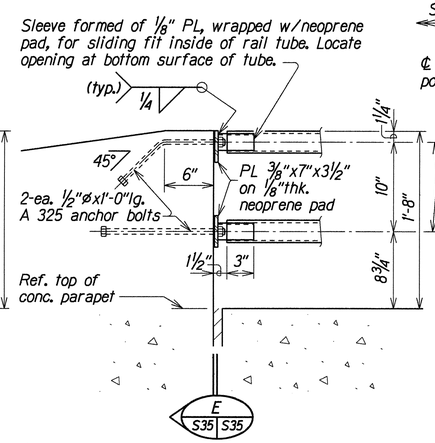

DETAIL
Scale: 1½" = 1'-0"

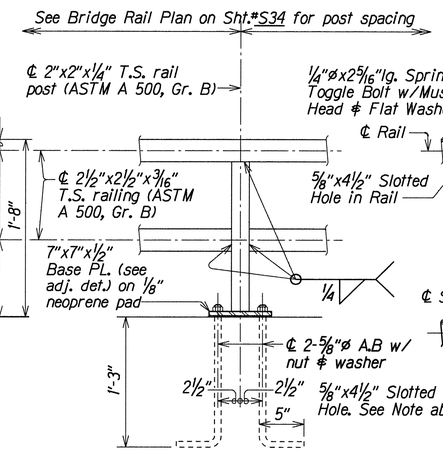

RAIL POST DETAIL
Scale: 1½" = 1'-0"

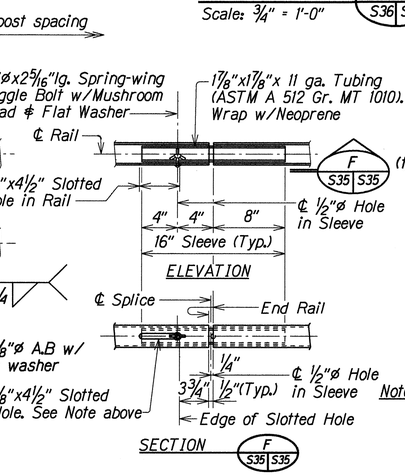

Note: Slotted Hole and Toggle Bolts shall be located on underside of Tube.

TUBE SPLICE DETAIL
Scale: 1½" = 1'-0"

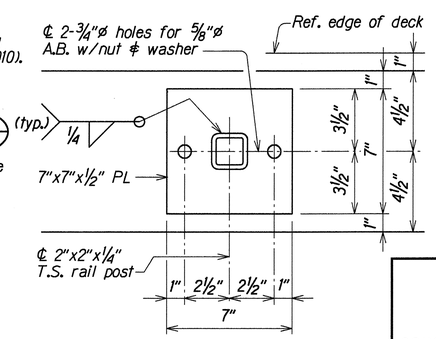

RAIL POST BASE PLATE DETAIL
Scale: 3" = 1'-0"

ORIGINAL PLAN	SURVEY PLOTTED BY	KSC	DATE DEC 1998
	DRAWN BY		
	TRACED BY	SK	DEC 1998
NOTE BOOK	DESIGNED BY	SK	DEC 1998
	QUANTITIES BY	SK	DEC 1998
	CHECKED BY	DKO	DEC 1998

STATE OF HAWAII
DEPARTMENT OF TRANSPORTATION
HIGHWAYS DIVISION

POHAKEA STREAM BRIDGE
CONCRETE RAIL and METAL RAIL DETAILS and DECK DRAIN OUTLET DETAILS
HONOAPIILANI HIGHWAY WIDENING
North Kihei Road to Kuihelani Highway
Fed. Aid Proj. No. BR-NH-030-1(24)

Scale: As Noted — Date: Dec. 1998

SHEET No. S35 OF 37 SHEETS

FED. ROAD DIST. NO.	STATE	FED. AID PROJ. NO.	FISCAL YEAR	SHEET NO.	TOTAL SHEETS
HAWAII	HAW.	BR-NH-030-1(24)	2000	84	139

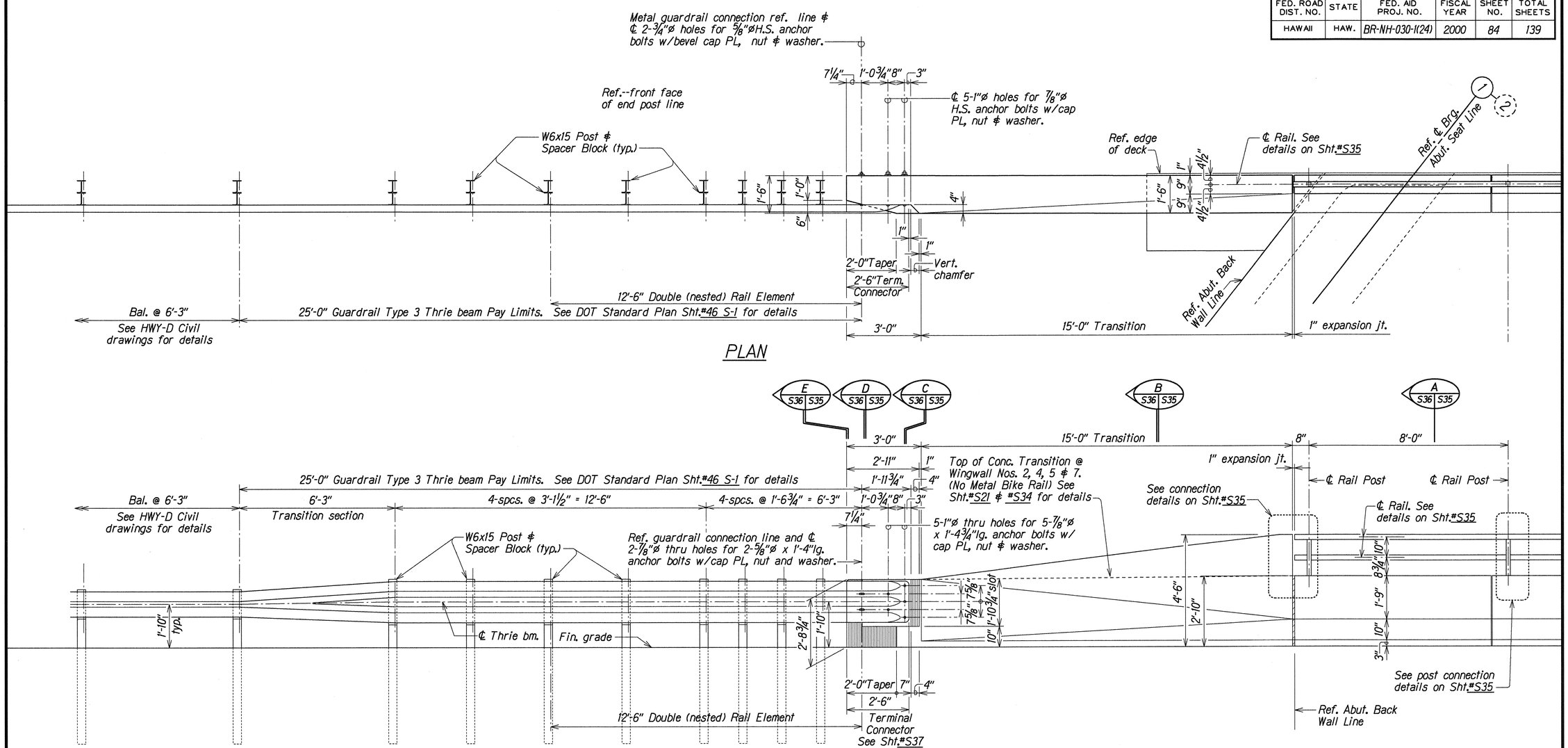

END POST and GUARDRAIL CONNECTION DETAILS

Scale: 1/2" = 1'-0"

NOTES:

1. The work necessary to connect guardrail to concrete end post shall include all labor, materials, tools, equipment and incidentals necessary to complete the work and shall be incidental to Item No. 606.3100, Guardrail Type 3 Thrie Beam on Steel Post and will not be paid for separately.
2. See "DOT Standard Plan" Sht.#46 S-1 for guardrail Type 3 thrie beam details and Sht.#TE-50 ∕ #TE-51 for W beam metal guardrail details. Lap terminal connector and rail element in direction of traffic to prevent snagging.
3. See "General Notes" on Sht.#S1 for additional guardrail and drilling information.
4. All anchor bolts shall be high strength bolts conforming to the requirements of ASTM 325.
5. Anchor bolt length shall be such that a snug fit of the elements and full thread engagement plus 1/4" (max) is attained.
6. "Terminal Connector" shall be fabricated from 10gauge steel conforming to the requirements of AASHTO M 180.
7. "Terminal Connector" and standard spacer, including all anchor bolts, cap PL, nuts and washers, shall be hot-dip galvanized after fabrication.
8. Cap PL shall be fabricated from ASTM A 36.
9. First 25'-0" of guardrail adjoining "Terminal Connector" shall be galvanized steel and supports spaced as shown on the detail drawings. This section of rail shall be placed on tangent to end post or parallel to roadway, unless conditions at site renders it impossible to do so. Flare point to be determined in field.
10. Double (nest 1st panel) thrie beam elements at all end post connections, except on highways with one-way traffic pattern, use single thrie beam elements at end post on trailing end only.
11. Where double (nested) beam occur, 12" "Back-up Plate" not required.

ORIGINAL PLAN	SURVEY PLOTTED BY KSG	DATE DEC 1998
	DRAWN BY	
NOTE BOOK	TRACED BY SK	DEC 1998
	DESIGNED BY SK	DEC 1998
	QUANTITIES BY DOD	DEC 1998
sht. S36 of	CHECKED BY	DEC 1998

STATE OF HAWAII
DEPARTMENT OF TRANSPORTATION
HIGHWAYS DIVISION

POHAKEA STREAM BRIDGE
END POST and GUARDRAIL CONNECTION DETAILS
HONOAPIILANI HIGHWAY WIDENING
North Kihei Road to Kuihelani Highway
Fed. Aid Proj. No. BR-NH-030-1(24)

Scale: As Noted — Date: Dec. 1998

SHEET No. S36 OF 37 SHEETS

FED. ROAD DIST. NO.	STATE	FED. AID PROJ. NO.	FISCAL YEAR	SHEET NO.	TOTAL SHEETS
HAWAII	HAW.	BR-NH-030-01(24)	2000	85	139

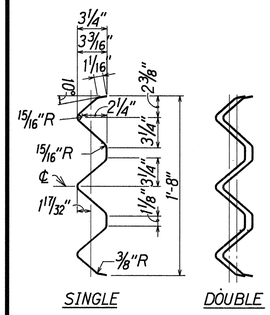

SECTION THRU RAIL ELEMENT
Scale: 1½" = 1'-0"

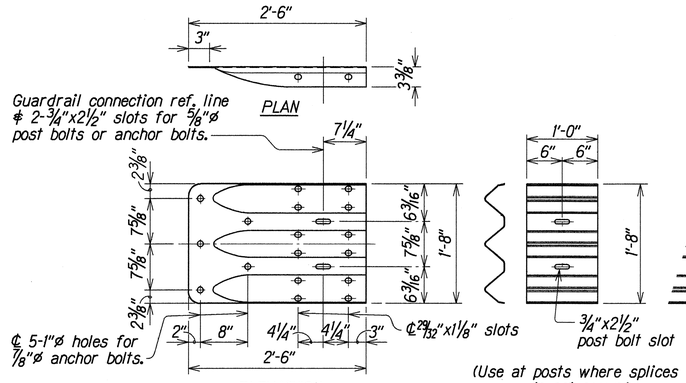

TERMINAL CONNECTOR
Scale: 1" = 1'-0"

BACKUP PLATE
Scale: 1" = 1'-0"

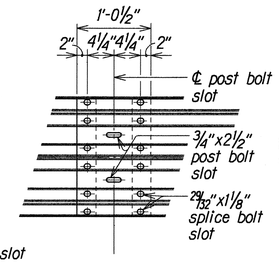

RAIL SPLICE
Scale: 1" = 1'-0"

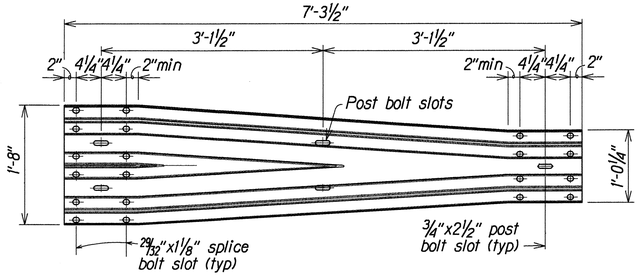

TRANSITION SECTION
Scale: 1" = 1'-0"

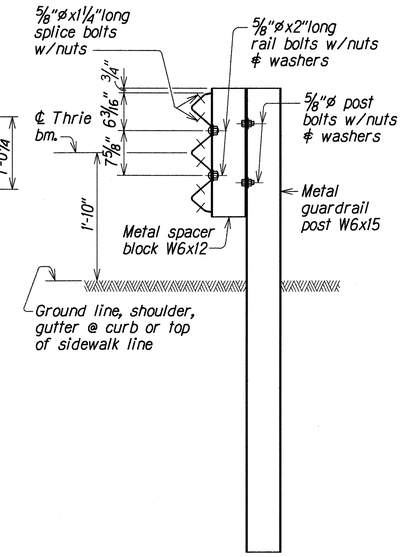

TYPICAL SECTION
METAL GUARDRAIL ON METAL POST WITH METAL SPACER BLOCK
Scale: 1" = 1'-0"

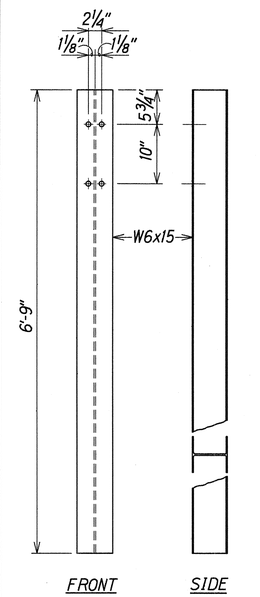

POST DETAILS
Scale: 1" = 1'-0"

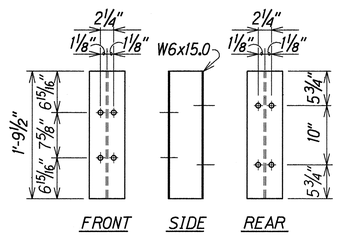

SPACER BLOCK DETAILS
Scale: 1" = 1'-0"

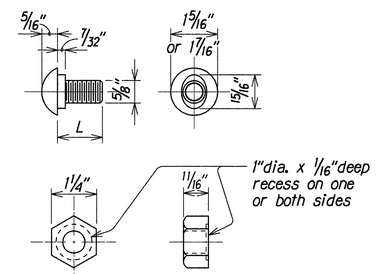

⅝"ø BUTTON HEAD BOLT & RECESS NUT
Scale: 6" = 1'-0"

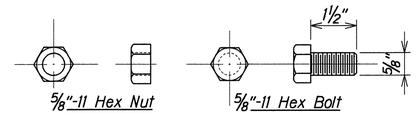

⅝"ø HEX BOLT & NUT
Scale: 6" = 1'-0"

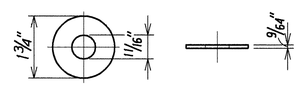

STEEL WASHER FOR ⅝"ø BOLT
Scale: 6" = 1'-0"

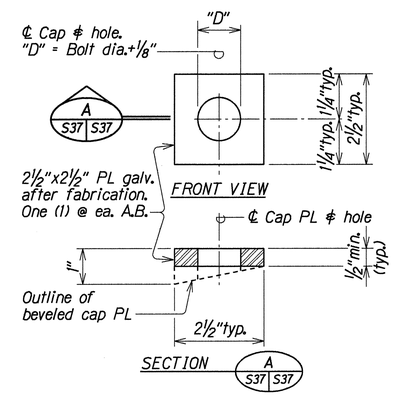

CAP (BEARING) PLATE DETAIL
Scale: 6" = 1'-0"

ORIGINAL PLAN	SURVEY PLOTTED BY	KSG	DATE
	DRAFTS BY		
	TRACED BY		
NOTE BOOK	DESIGNED BY	SK	DEC 1998
	QUANTITIES BY	SK	DEC 1998
Sht. S37 of	CHECKED BY	DOO	DEC 1998

NOTES:

1. The work necessary to connect guardrail to concrete end post shall include all labor, materials, tools, equipment and incidentals necessary to complete the work and shall be incidental to Item No. 606.3100, Guardrail Type 3 Thrie Beam on Steel Post and will not be paid for separately.
2. See "DOT Standard Plan" Sht.#46 S-1 for guardrail Type 3 thrie beam details and Sht.#TE-50 & #TE-51 for W beam metal guardrail details. Lap terminal connector and rail element in direction of traffic to prevent snagging.
3. See "General Notes" on Sht.#S1 for additional guardrail and drilling information.
4. All anchor bolts shall be high strength bolts conforming to the requirements of ASTM 325.
5. Anchor bolt length shall be such that a snug fit of the elements and full thread engagement plus ¼" (max) is attained.
6. "Terminal Connector" shall be fabricated from 10gauge steel conforming to the requirements of AASHTO M 180.
7. "Terminal Connector" and standard spacer, including all anchor bolts, cap PL, nuts and washers, shall be hot-dip galvanized after fabrication.
8. Cap PL shall be fabricated from ASTM A 36.
9. First 25'-0" of guardrail adjoining "Terminal Connector" shall be galvanized steel and supports spaced as shown on the detail drawings. This section of rail shall be placed on tangent to end post or parallel to roadway, unless conditions at site renders it impossible to do so. Flare point to be determined in field.
10. Double (nest 1st panel) thrie beam elements at all end post connections, except on highways with one-way traffic pattern, use single thrie beam elements at end post on trailing end only.
11. Where double (nested) beam occur, 12" "Back-up Plate" not required.

METAL GUARDRAIL TYPE 3 THRIE BEAM AND APPURTENANCES DETAILS

STATE OF HAWAII
DEPARTMENT OF TRANSPORTATION
HIGHWAYS DIVISION

POHAKEA STREAM BRIDGE
METAL GUARDRAIL TYPE 3 THRIE BEAM AND APPURTENANCES DETAILS
HONOAPIILANI HIGHWAY WIDENING
North Kihei Road to Kuihelani Highway
Fed. Aid Proj. No. BR-NH-030-1(24)

Scale: As Noted — Date: Dec. 1998

SHEET No. S37 OF 37 SHEETS