FED. ROAD DIST. NO.	STATE	FED. AID PROJ. NO.	FISCAL YEAR	SHEET NO.	TOTAL SHEETS
HAWAII	HAW.	F-030-1(18)	1984	88	160

INDEX TO DRAWINGS

ESTIMATED QUANTITIES

ITEM NO.	ITEM	UNIT	QUANTITY
206.5100	Structure Excavation for Wingwall No. 3	C.Y.	83 C.Y.
206.6000	Structure Excavation for Bridges	C.Y.	△ 2,418 C.Y.
206.7210	Structure Backfill for Bridge Abutments	C.Y.	234 C.Y.
206.7241	Structure Backfill for Wingwall No. 3	C.Y.	77 C.Y.
206.8200	Filter Material for Structures	C.Y.	33 C.Y.
206.8301	Filter Material for Wingwall No. 3	C.Y.	7 C.Y.
207.0101	Ditch and Channel Excavation for Honokahua Stream Bridge	C.Y.	1,097 C.Y.
501.0211	Structure Steel for Protective Nosing of Deck Expansion Joints	Lump Sum	3,460 Lbs
503.1091	Concrete in Honokahua Stream Bridge (Except Footings)	Lump Sum	△ 2,392 C.Y.
503.1092	Concrete in Footings for Honokahua Stream Bridge	Lump Sum	△ 621 C.Y.
503.1401	Concrete in Wingwall No. 3 (Except Footing)	Lump Sum	16 C.Y.
503.1411	Concrete in Footing for Wingwall No. 3	Lump Sum	16 C.Y.
504.4100	Type IV Prestressed Concrete Girders	Lump Sum	4,788 L.F.
507.1100	Metal Bridge Railing - One Rail on Parapet Honokahua Stream Bridge	Lin. Ft.	1,232 L.F.
507.1210	Metal Bridge Railing - One Rail on Parapet at Wingwall No. 3.	Lin. Ft.	27 L.F.
507.7010	Concrete Bridge Parapet, Including 3 End Posts	Lin. Ft.	1,262 L.F.
507.7020	Concrete Bridge Parapet, Including 1 End Post at Wingwall No. 3	Lin. Ft.	37 L.F.
602.0051	Reinforcing Steel in Wingwall No. 3	Lump Sum	4,850 Lbs.
602.0090	Reinforcing Steel in Honokahua Stream Bridge	Lump Sum	△ 254,210 Lbs.
612.0200	Grouted Rubble Slope Protection	C.Y.	15 C.Y.
648.0000	Riprap Blanket	C.Y.	747 C.Y.

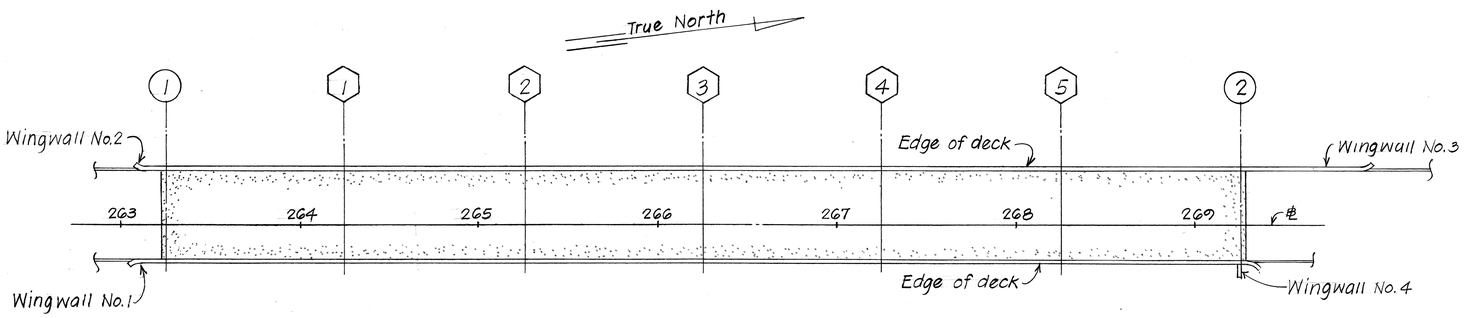

LOCATION PLAN

Scale: 1" = 40'-0"

ORIGINAL PLAN	SURVEY PLOTTED BY	DATE
	DRAWN BY	3/85
	TRACED BY	3/85
NOTE BOOK	DESIGNED BY	3/85
	QUANTITIES BY	
No.	CHECKED BY	

DATE	REVISION
5-1-85	△ Revised Estimated Quantities.

STATE OF HAWAII
DEPARTMENT OF TRANSPORTATION
LAND TRANSPORTATION FACILITIES DIVISION

HONOKAHUA STREAM BRIDGE

INDEX TO DRAWINGS, LOCATION PLAN
ESTIMATED QUANTITIES

HONOAPIILANI HIGHWAY
Pineapple Hill to Honokahua Bay
Proj. No. F-030-1(18)

Scale: As Noted Date: Apr. 1984

SHEET No. 1 OF 22 SHEETS

FED. ROAD DIST. NO.	STATE	FED. AID PROJ. NO.	FISCAL YEAR	SHEET NO.	TOTAL SHEETS
HAWAII	HAW.	F-030-1(18)	1984	89	160

GENERAL STRUCTURAL NOTES

DESIGN SPECIFICATIONS:
AASHTO, Standard Specifications for Highway Bridges (12th edition, including Interim Specifications Bridges, 1978, 1979, 1980, 1981, 1982, 1983.

DESIGN LIVE LOAD:
HS-20-44 or Interstate Loading

ALLOWABLE DESIGN STRESSES:
1. Reinforced concrete: $f_c = 0.40\ f'c$
2. Reinforcing steel: $f_s = 20{,}000$ psi for Grade 40, 24,000 psi for Grade 60
3. Prestressed concrete: see Design Specifications.

MATERIALS:
1. Reinforced concrete - 5,000 psi (pier footings, pedestals, columns & caps)
   - Class BD (for bridge deck on girders)
   - Class A (all others)
2. Reinforcing steel - ASTM A615, Grade 40 or Grade 60
3. Prestressed concrete - see sht. #TD1.
4. Admixture in concrete - see Special Provisions

CONSTRUCTION METHODS:
1. Refer to Standard Specifications for Road and Bridge Construction, 1976 Edition and Special Provisions.
2. In general, top of concrete deck of superstructure shall be constructed to follow the finish roadway vertical and horizontal curves and grades. See Highway Plans.
3. The Contractor shall verify all grades and dimensions before commencing with any work.
4. For concrete finish, see Standard Specifications & Special Provisions. Girder concrete seats, hinge & creep blocks to be poured monolithically with the supporting structures. Top surfaces of conc. seats to have hard trowel finish.
5. Except as noted otherwise, all vertical dimensions are measured plumb.
6. Abutment, Wingwall and Pier Footings shall be excavated and poured neat against undisturbed ground. In case of over excavation, space between footing and ground shall be filled with concrete at the Contractors expense and as directed by the Engineer. The minimum quality of the fill concrete shall be Class D.

REFERENCE:
1. Refer to Standard Detailed Drawings for additional details not covered by detailed and typical drawings.

GENERAL NOTES:
1. All items noted incidental will not be paid for separately.
2. All preformed elastomeric bearing pads and preformed fabric bearing pads shall be secured against displacement with adhesives approved by the Engineer.
3. Except as otherwise noted on plans, all exposed exterior corners 90° or less shall be chamfered 3/4" x 3/4". All exposed exterior corners greater than 90° shall not be chamfered. Round all finish corners 1/4" radius unless noted otherwise.
4. Exact location of bars shall be so arranged so that no interference will occur between vertical column reinforcement and bottom pier cap horizontal reinforcement.

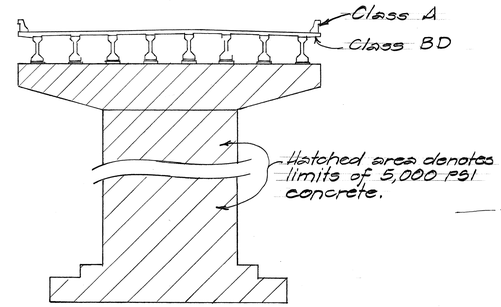

TYPICAL DETAIL SHOWING CLASS CONCRETE & LIMITS OF 5,000 PSI CONCRETE AT PIERS

Not to Scale

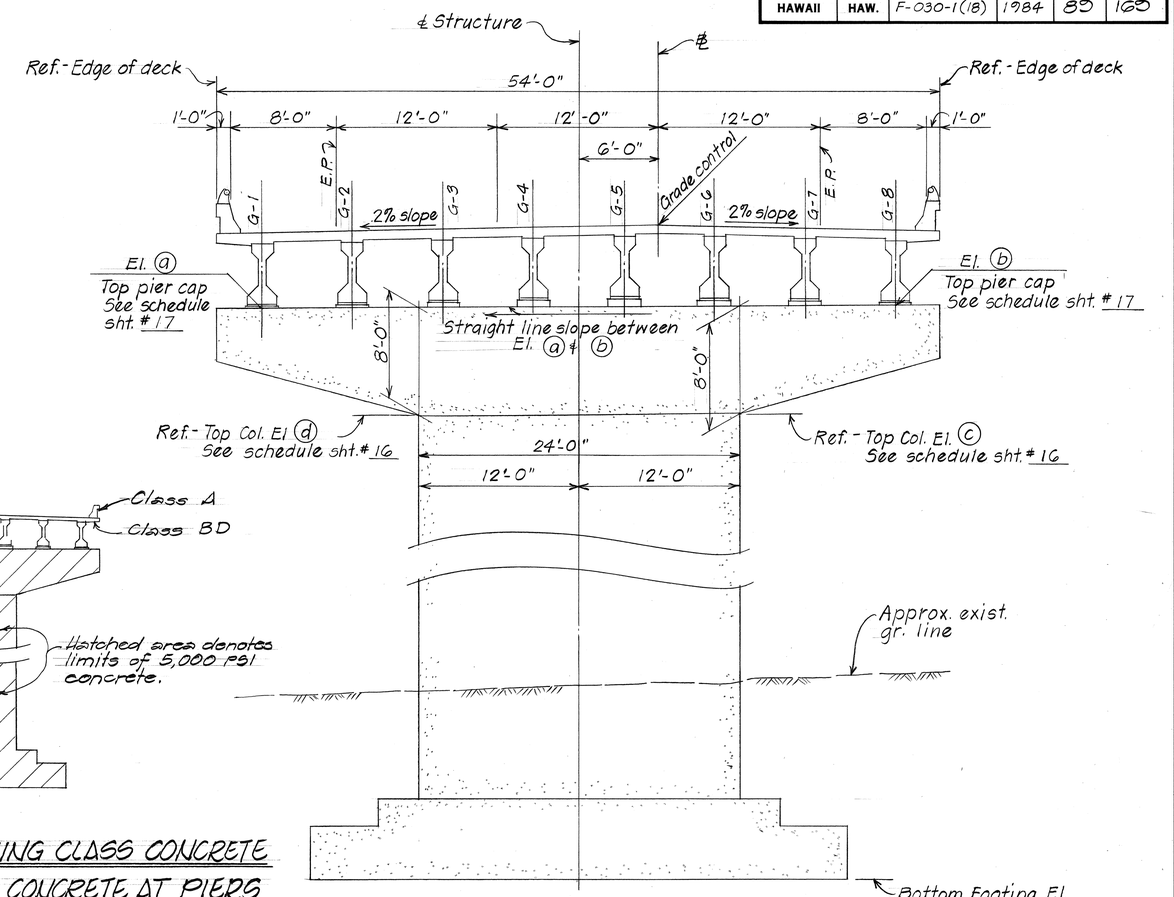

TYPICAL PIER ELEVATION

Scale: 3/16" = 1'-0"

SURVEY PLOTTED BY		DATE
DRAWN BY	J.M.A.	3/84
TRACED BY	J.M.A.	"
DESIGNED BY	DCO	2/84
QUANTITIES BY		
CHECKED BY		

ORIGINAL PLAN
NOTE BOOK No.

STATE OF HAWAII
DEPARTMENT OF TRANSPORTATION
HIGHWAYS DIVISION

HONOKAHUA STREAM BRIDGE

GENERAL STRUCTURAL NOTES
TYPICAL PIER ELEVATION

HONOAPIILANI HIGHWAY
Pineapple Hill to Honokahua Bay
Proj. No. F-030-1(18)

Scale: As Noted Date: Apr. 1984

SHEET No. 2 OF 22 SHEETS

FED. ROAD DIST. NO.	STATE	FED. AID PROJ. NO.	FISCAL YEAR	SHEET NO.	TOTAL SHEETS
HAWAII	HAW.	F-030-1(18)	1984	20	169

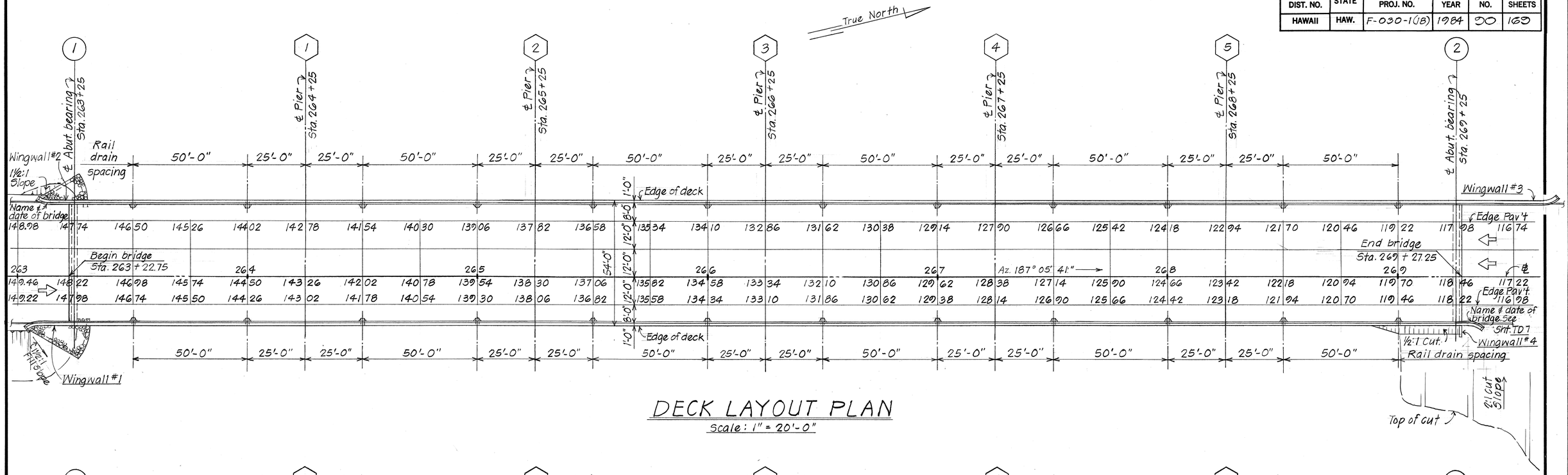

DECK LAYOUT PLAN

Scale: 1" = 20'-0"

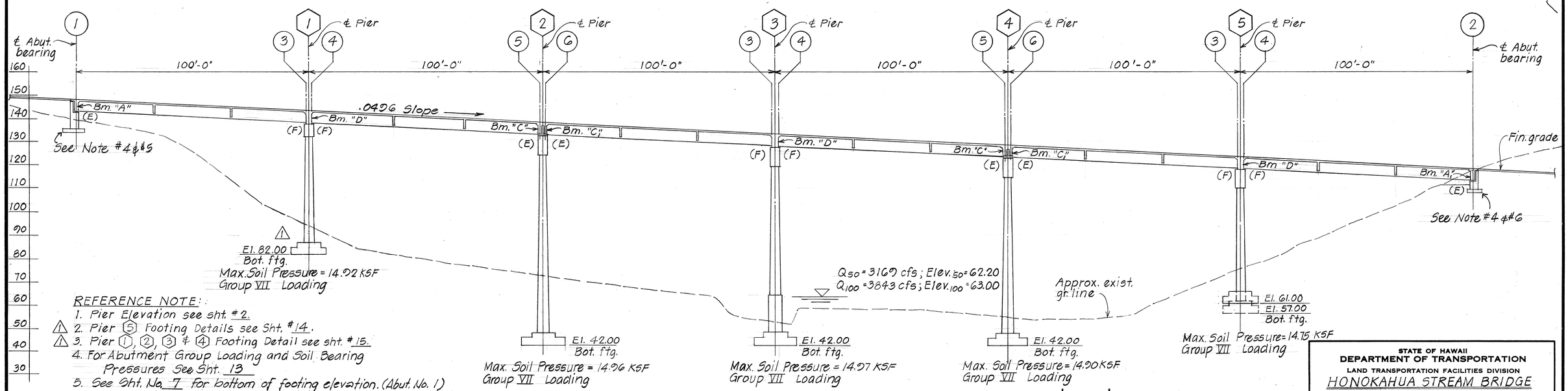

REFERENCE NOTE:

1. Pier Elevation see sht. #2.
2. ⚠ Pier (5) Footing Details see Sht. #14.
3. ⚠ Pier (1), (2), (3) & (4) Footing Detail see sht. #15.
4. For Abutment Group Loading and Soil Bearing Pressures See Sht. 13
5. See Sht. No. 7 for bottom of footing elevation. (Abut. No. 1)
6. See Sht. No. 9 for bottom of footing elevation. (Abut. No. 2)

LONGITUDINAL SECTION ALONG ℄

Scale: 1" = 20'-0"

DATE	REVISION
5-1-85	⚠ Revised pier (1) footing & reference note.

STATE OF HAWAII
DEPARTMENT OF TRANSPORTATION
LAND TRANSPORTATION FACILITIES DIVISION

HONOKAHUA STREAM BRIDGE

LAYOUT PLAN
LONGITUDINAL DECK SECTION
HONOAPIILANI HIGHWAY
Pineapple Hill to Honokahua Bay
Proj. No. F-030-1(18)

Scale: As Noted — Date: Apr. 1984

SHEET No. 3 OF 22 SHEETS

ORIGINAL PLAN	SURVEY PLOTTED BY	DATE 3/84
	DRAWN BY L.M.A.	" "
NOTE BOOK	TRACED BY	" 2/84
	DESIGNED BY CCO	
No.	QUANTITIES BY	
	CHECKED BY	

CO 90

FED. ROAD DIST. NO.	STATE	FED. AID PROJ. NO.	FISCAL YEAR	SHEET NO.	TOTAL SHEETS
HAWAII	HAW.	F-030-1(18)	1984	91	169

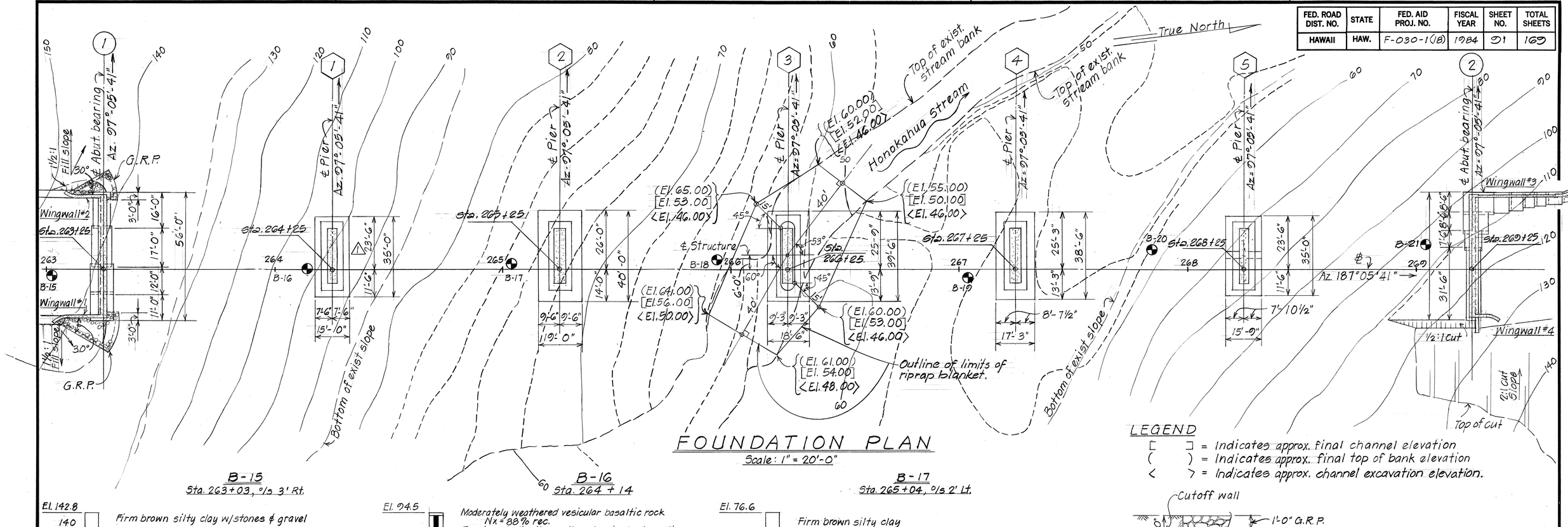

FOUNDATION PLAN

Scale: 1" = 20'-0"

LEGEND

[ ] = Indicates approx. final channel elevation
( ) = Indicates approx. final top of bank elevation
⟨ ⟩ = Indicates approx. channel excavation elevation.

B-15

Sta. 263+03, °/s 3' Rt.

El. 142.8

- Firm brown silty clay w/stones & gravel
  - Split spoon 28/0.5 - 60/0.3 blows/ft.
- Moderately weathered vesicular boulder, stones & gravel
- Firm grayish brown silty clay w/ highly weathered gravel & stones
  - Split spoon 32 blows/ft.
- Firm grayish brown silty clay w/ highly weathered weathered gravel, stones & boulder
  - Split spoon 81 blows/ft.
  - Split spoon 60 blows/0.2 ft.
- Moderately weathered vesicular basaltic rock
  - Nx = 92 % rec.
- Moderately weathered vesicular basaltic rock w/ pockets of highly wea. ves. bas. rock
  - Nx = 98 % rec.
- Slightly weathered vesicular basaltic rock
- Highly weathered vesicular basaltic rock
  - Nx = 96 % rec.
- Slightly weathered vesicular basaltic rock
  - Nx = 100 % rec.
  - Nx = 64 % rec.
- Highly weathered vesicular basaltic rock

B-16

Sta. 264 + 14

El. 94.5

- Moderately weathered vesicular basaltic rock
  - Nx = 88 % rec.
- Fractured slightly weathered vesicular basaltic rock
  - Nx = 92 % rec.
  - Nx = 86 % rec.
- Fractured moderately weathered vesicular basaltic rock
  - Nx = 76 % rec.
  - Nx = 64 % rec.
- Moderately weathered & highly weathered vesicular basaltic rock
  - Nx = 86 % rec.
- Slightly weathered vesicular basaltic rock
  - Nx = 96 % rec.
- Moderately weathered vesicular basaltic rock
  - Nx = 84 % rec.
- Slightly weathered vesicular basaltic rock
  - Nx = 90 % rec.
  - Nx = 80 % rec.
- Moderately weathered vesicular basaltic rock
- Slightly weathered vesicular basaltic rock
  - Nx = 90 % rec.
- Highly weathered vesicular basaltic rock
- Moderately weathered vesicular basaltic rock
  - Nx = 92 % rec.
- Slightly weathered vesicular basaltic rock
  - Nx = 74 % rec.
  - Nx = 100 % rec.
- Slightly & moderately weathered vesicular basaltic rock
  - Nx = 100 % rec.
- Moderately weathered vesicular basaltic rock
  - Nx = 100 % rec.
- Fractured moderately weathered vesicular basaltic rock
  - Nx = 64 % rec.
  - Nx = 77.8 % rec.

B-17

Sta. 265+04, °/s 2' Lt.

El. 76.6

- Firm brown silty clay
  - Split spoon 28 blows/ft.
  - Denison 35% rec.
- Soft brown silty clay
  - Split spoon 15 blows/ft.
  - Piston (hydraulic - 225 psi) 100 % rec.
  - Split spoon 27 blows/ft.
- Firm brown silty clay with traces of highly weathered gravel & stones
  - Split spoon 24 blows/ft.
- Firm brown silty clay with boulders & cobbles
  - Nw = 68 % rec.
- Unweathered dense basalt boulders with pockets of gravel & stones
  - Nw = 44 % rec.
- Highly weathered vesicular basaltic boulders w/ stones & gravel
  - Nw = 36 % rec.
  - Split spoon 26 blows/ft.
- Highly weathered vesicular boulders, stones & gravel
  - Piston (hydraulic - 860 psi) 100% rec.
- Highly weathered vesicular boulder
  - Split spoon 60 blows/ft.
- Very hard grayish-brown silty clay
- Highly weathered vesicular boulder
  - Split spoon 26 blows/ft.
- Firm brown silty clay w/ highly weathered gravel
- Highly weathered boulder
- Firm brown silty clay
- Moderately weathered vesicular boulder
  - Split spoon 11/0.5 - 56/0.5 - 75/0.2 blows/ft.

NOTE:

The boring data furnished in these plans are the results of the facts gathered at the specific locations indicated to primarily aid in the design of the structure and does not necessarily typify conditions at other locations. The Department assumes no responsibility for sufficiency of boring data or the prevalance of conditions similar to that indicated by the boring data.

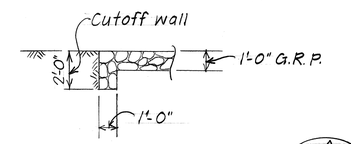

TYPICAL SECTION (A / 4|4)

Scale: ¼" = 1'-0"

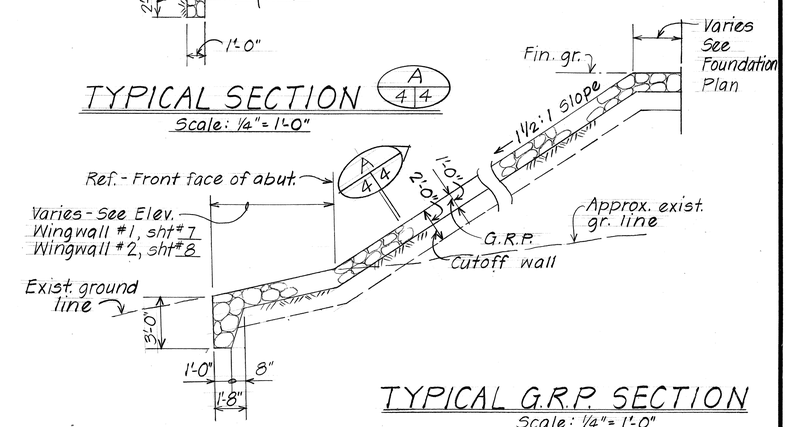

TYPICAL G.R.P. SECTION

Scale: ¼" = 1'-0"

DATE	REVISION
5-1-85	⚠ Revised pier ① footing

STATE OF HAWAII
DEPARTMENT OF TRANSPORTATION
LAND TRANSPORTATION FACILITIES DIVISION

HONOKAHUA STREAM BRIDGE

FOUNDATION PLAN
BORING LOGS

HONOAPIILANI HIGHWAY
Pineapple Hill to Honokahua Bay
Proj. No. F-030-1(18)

Scale: As Noted — Date: Apr. 1984

SHEET No. 4 OF 22 SHEETS

ORIGINAL PLAN — NOTE BOOK No. — SURVEY PLOTTED BY — DRAWN BY L.M.A. — TRACED BY — DESIGNED BY D.C.O. — QUANTITIES BY — CHECKED BY — DATE 3/84

CO 91

FED. ROAD DIST. NO.	STATE	FED. AID PROJ. NO.	FISCAL YEAR	SHEET NO.	TOTAL SHEETS
HAWAII	HAW.	F-030-1(18)	1984	52	160

B-18

Sta. 265+94, °/s 4' Lt.

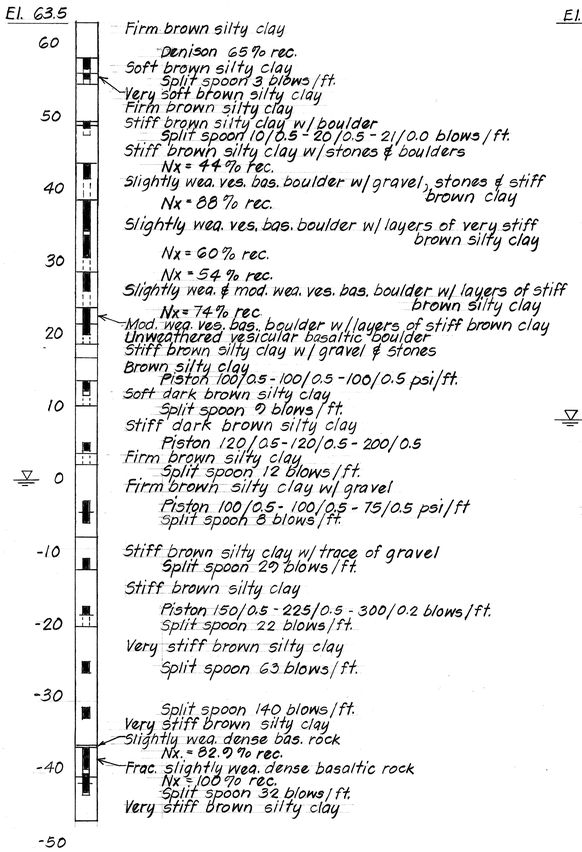

B-19

Sta. 267+04, °/s 3' Rt.

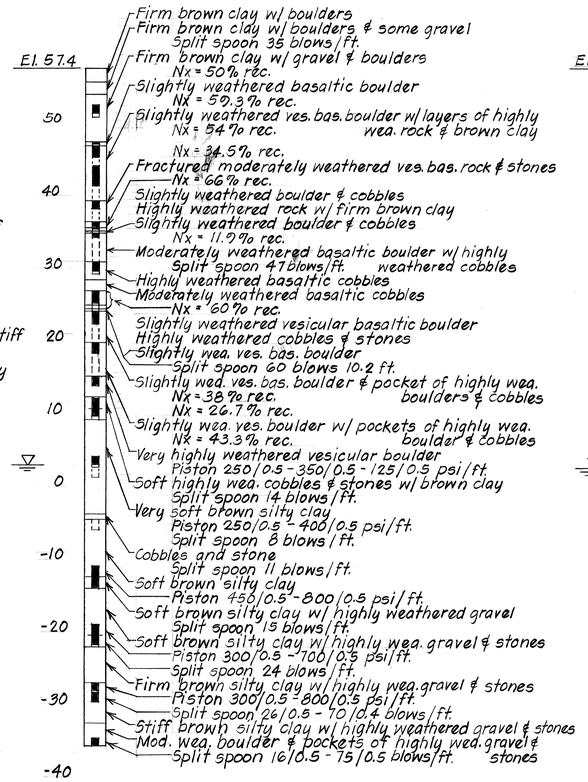

B-20

Sta. 267+84, °/s 8' Lt.

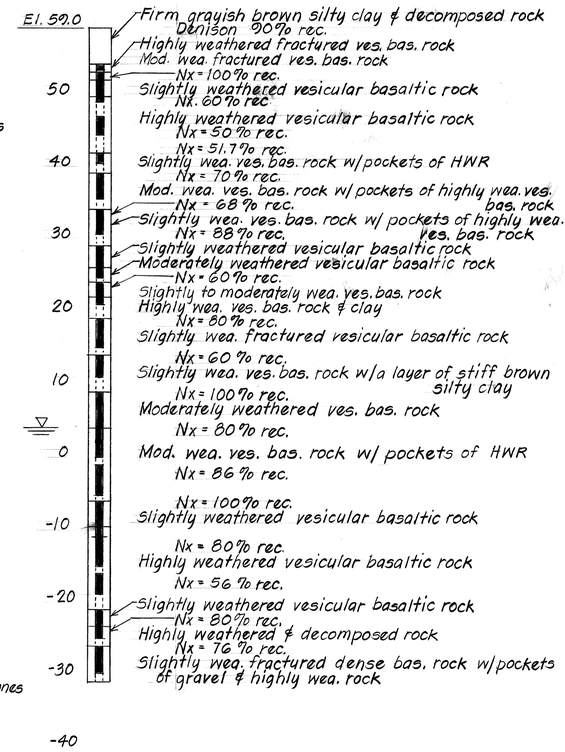

NOTE:

The boring data furnished in these plans are the results of the facts gathered at the specific locations indicated to primarily aid in the design of the structure and does not necessarily typify conditions at other locations. The Department assumes no responsibility for sufficiency of boring data or the prevalence of conditions similar to that indicated by the boring data.

B-21

Sta. 269+04, °/s 11' Lt.

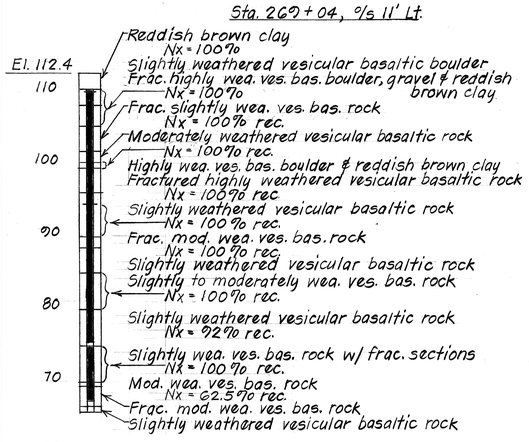

B-22

Sta. 270+04, °/s 13' Lt.

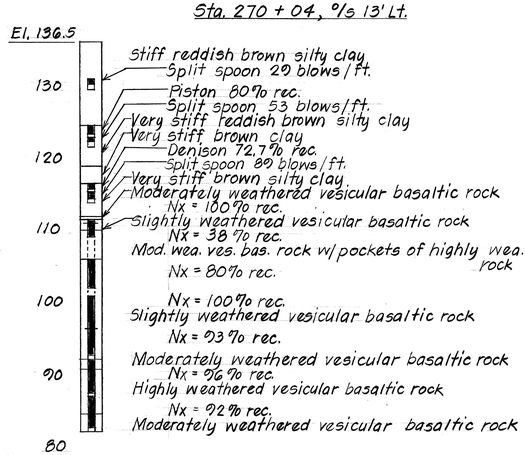

SYMBOLS AND ABBREVIATIONS

Detail or Section designation

Sht. no. sect. is cut or det. location — F 20 25 — sht. no. detail is drawn.

① ② & Bearing

Boring number & designation

Ⓘ Pier column number

A	Abut.	– Abutment	I	Int.	– Interior
	Adj.	– Adjacent	J	Jt.	– Joint
	Alt.	– Alternate	L	L	– Length
	Alum.	– Aluminum		Lg.	– Long
	Approx.	– Approximate		Lin. ft.	– Lineal Foot
	Az.	– Azimuth		Longit.	– Longitudinal
B	℄	– Baseline	M	Max.	– Maximum
	Bal.	– Balance		Min.	– Minimum
	Bet.	– Between	N	No., #	– Number
	Bot., bott.	– Bottom		Nos.	– Numbers
	Bm., bm.	– Beam	O	o.c.	– On Center
C	C.Y.	– Cubic Yard	P	P.G. IV	– Prestressed Girder Type
	Cl.	– Clear		Pav't.	– Pavement
	Cont.	– Continuous		P.V.C.	– Polyvinyl Chloride
	Const.	– Construction	R	R	– Radius
	Comp.	– Composition		Rdwy.	– Roadway
	Corresp.	– Corresponding		Ref.	– Reference
	Conc.	– Concrete		Reinf.	– Reinforcement
	Col.	– Column		Req'd.	– Required
	℄	– Centerline		Ret.	– Retaining
D	D.O.	– Ditto	S	S.E.	– Super Elevation
	Det.	– Detail		Sect.	– Section
	Diag.	– Diagonal		Sht.	– Sheet
	Dim.	– Dimension		Spcs.	– Spaces
				Sta.	– Station
E	(E)	– Expansion		Std.	– Standard
	E.F.	– Each Face		Stirr.	– Stirrup
	E.P.	– Edge Pavement		Str.	– Straight
	Ea.	– Each		Symm.	– Symmetrical
	El., Elev.	– Elevation			
	Eq.	– Equal	T	T. & B.	– Top and Bottom
	Exist.	– Existing		Typ.	– Typical
	Exp.	– Expansion		TSS	– Top Slab Strip (Reinforcing Type)
	Ext.	– Exterior			
F	(F)	– Fixed	V	Vert.	– Vertical
	Fin.	– Finish			
	Ftg.	– Footing	W	W/	– With
				W.P.	– Working Point
G	Galv.	– Galvanized		W.W.	– Wingwall
	Gr.	– Ground, Grade			
	G.R.P.	– Grouted Rubble Paving			
H	h	– Height			
	Horiz.	– Horizontal			
	Hwy.	– Highway			

STATE OF HAWAII
DEPARTMENT OF TRANSPORTATION
LAND TRANSPORTATION FACILITIES DIVISION

HONOKAHUA STREAM BRIDGE

BORING LOGS, SYMBOLS & ABBREVIATION

HONOAPIILANI HIGHWAY
Pineapple Hill to Honokahua Bay
Proj. No. F-030-1(18)

Scale: As Noted — Date: Apr. 1984

SHEET No. 5 OF 22 SHEETS

ORIGINAL PLAN — SURVEY PLOTTED BY — DRAWN BY — TRACED BY — DESIGNED BY — QUANTITIES BY — CHECKED BY — DATE 3/84 — NOTE BOOK No. — 2/84

FED. ROAD DIST. NO.	STATE	FED. AID PROJ. NO.	FISCAL YEAR	SHEET NO.	TOTAL SHEETS
HAWAII	HAW.	F-030-1(18)	1984	93	169

NOTE:

1 – Hatched area shown thus denote limits of structure excavation pay line.
2 – Hatched area shown thus denote limits of structure backfill.
3 – Hatched area shown thus denote limits of roadway excavation.
4 – Hatched area shown thus denote limits of channel excavation.

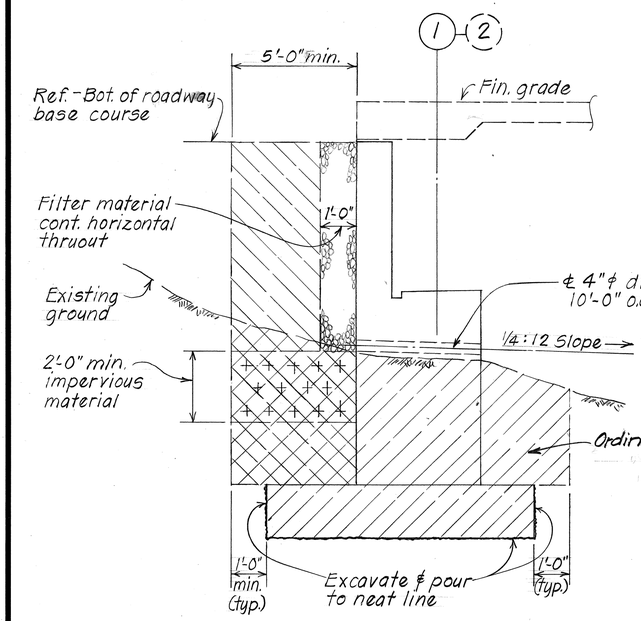

AT TYPE I ABUTMENT

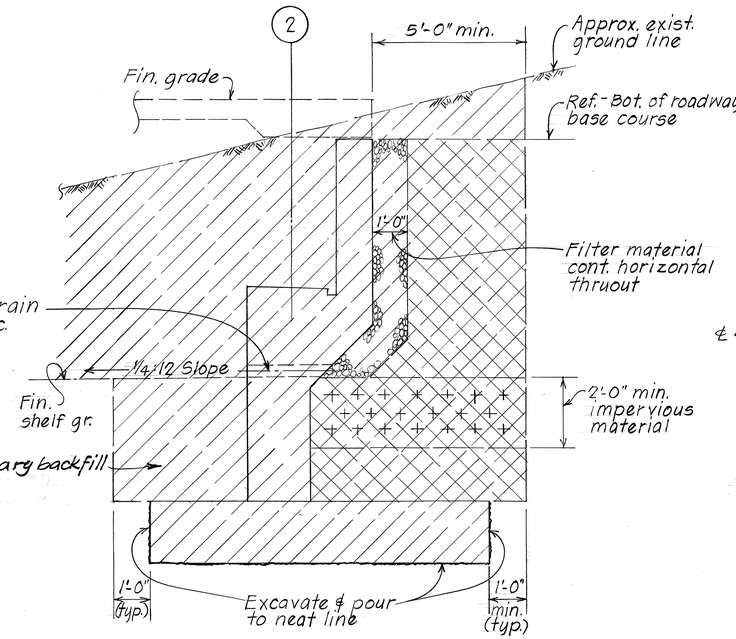

AT TYPE II ABUTMENT

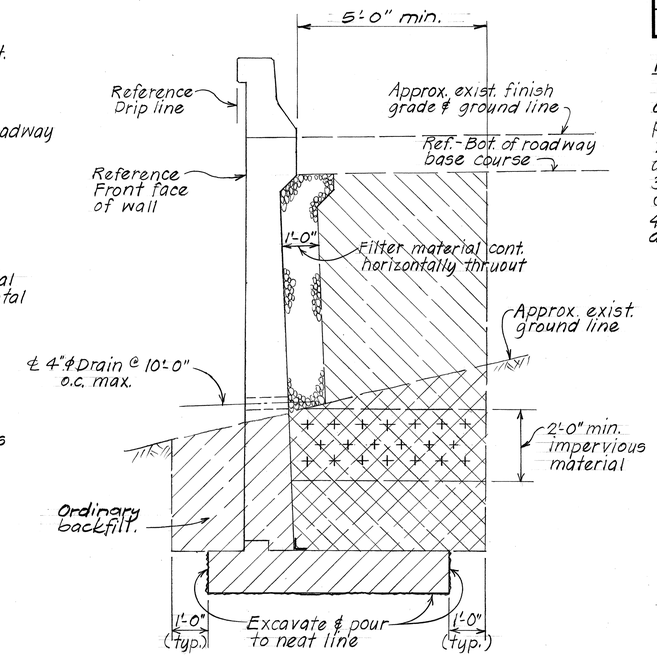

AT WINGWALL NO. 3

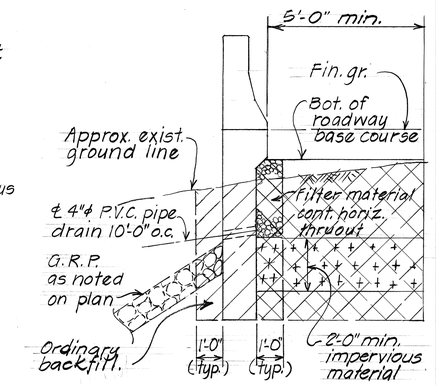

AT WINGWALL & END POST

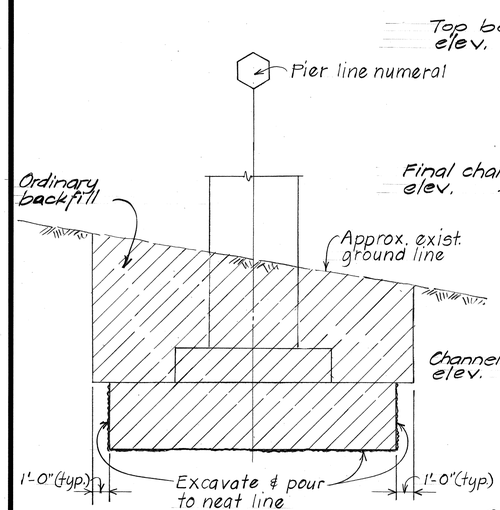

AT PIER

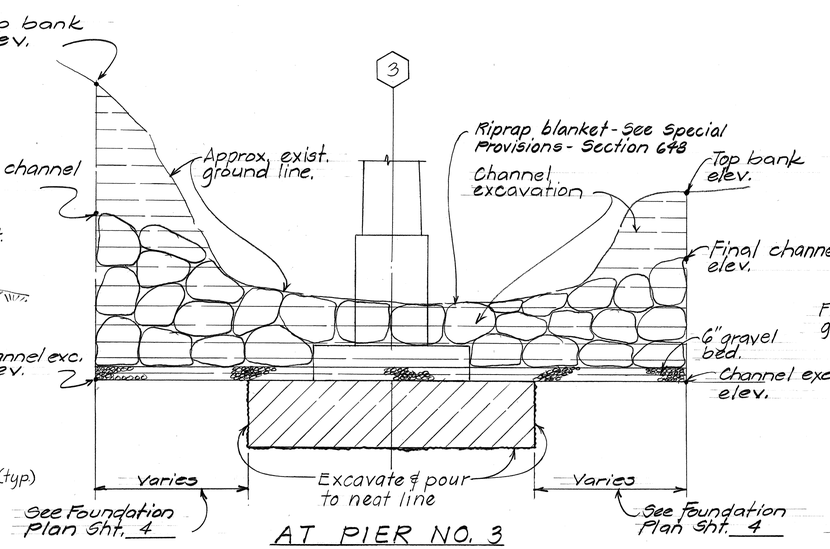

AT PIER NO. 3

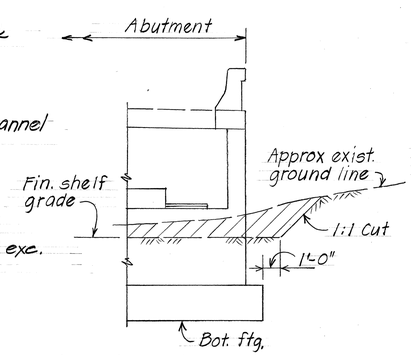

AT ABUTMENT END

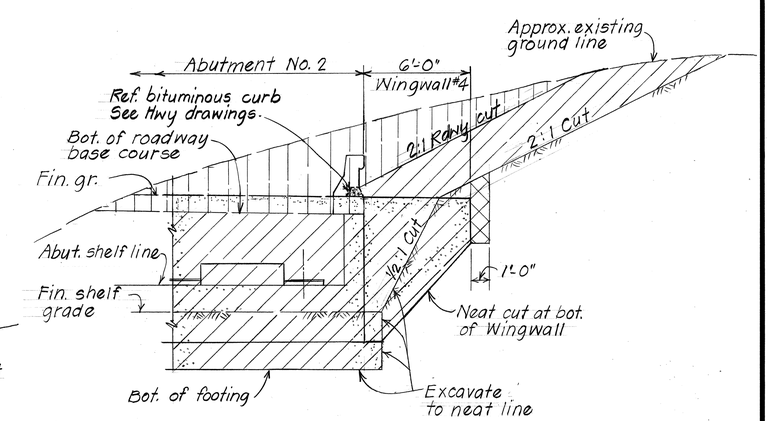

AT WINGWALL NO. 4

STRUCTURE EXCAVATION & BACKFILL PAY LIMITS

Not to scale

ORIGINAL PLAN	SURVEY PLOTTED BY	DATE
	DRAWN BY L.M.A.	3/84
	TRACED BY L.M.A.	3/84
NOTE BOOK	DESIGNED BY D.C.O.	3/84
No.	QUANTITIES BY	
	CHECKED BY	

STATE OF HAWAII
DEPARTMENT OF TRANSPORTATION
HIGHWAYS DIVISION

HONOKAHUA STREAM BRIDGE

TYPICAL ABUTMENT & PIER
STRUCTURE EXC. & BACKFILL PAY LIMITS

HONOAPIILANI HIGHWAY
Pineapple Hill to Honokahua Bay
Proj. No. F-030-1(18)

Scale: As Noted Date: Apr. 1984

SHEET No. 6 OF 22 SHEETS

FED. ROAD DIST. NO.	STATE	FED. AID PROJ. NO.	FISCAL YEAR	SHEET NO.	TOTAL SHEETS
HAWAII	HAW.	F-030-1(18)	1984	94	160

REFERENCE NOTE:

1. Bridge deck & superstructure not shown.
2. For conc. seat, hinge block, creep block and elastomeric bearing pad, see sht. # TD2 & TD3
3. For concrete end post detail, see sht. # TD7
4. Top seat El. see sht. # TD2

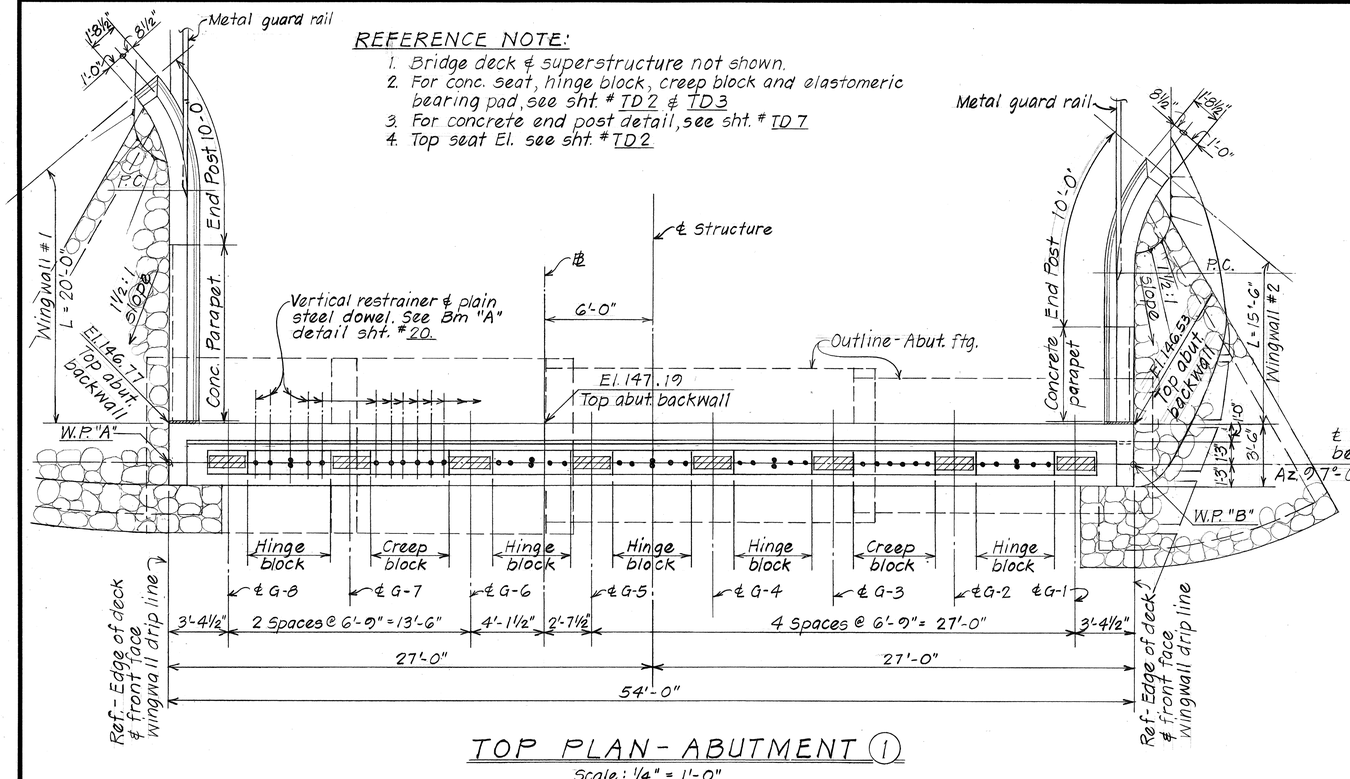

TOP PLAN - ABUTMENT (1)

Scale: 1/4" = 1'-0"

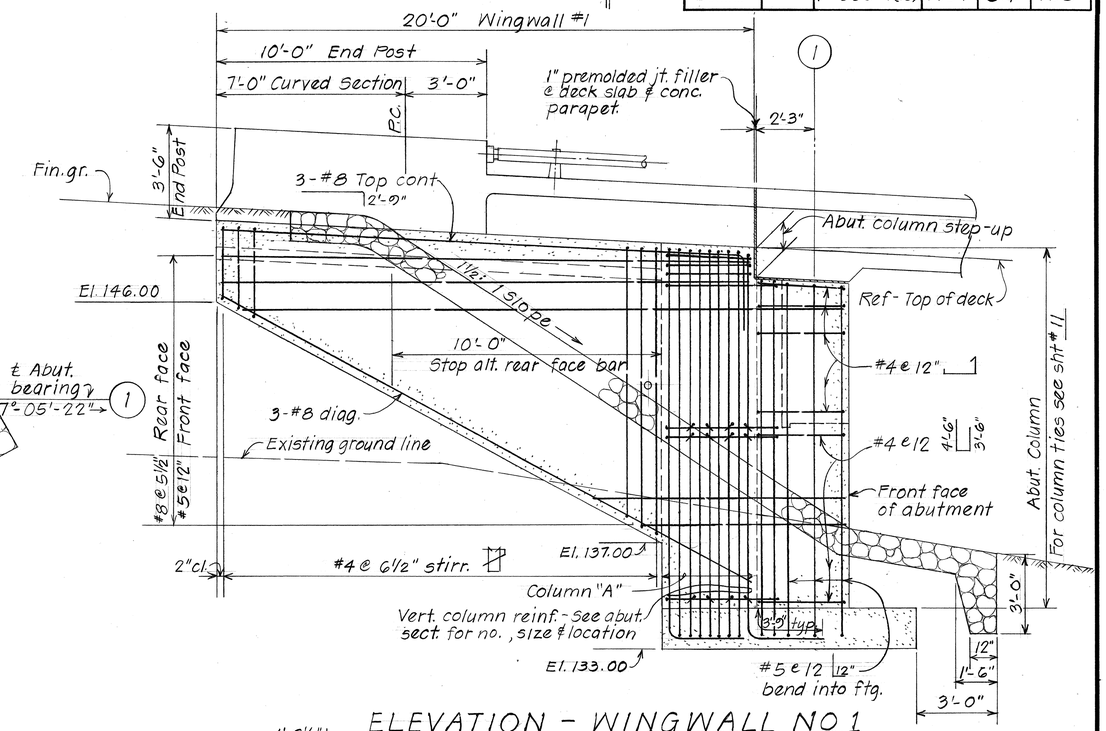

ELEVATION - WINGWALL NO 1

Scale: 3/8" = 1'-0"

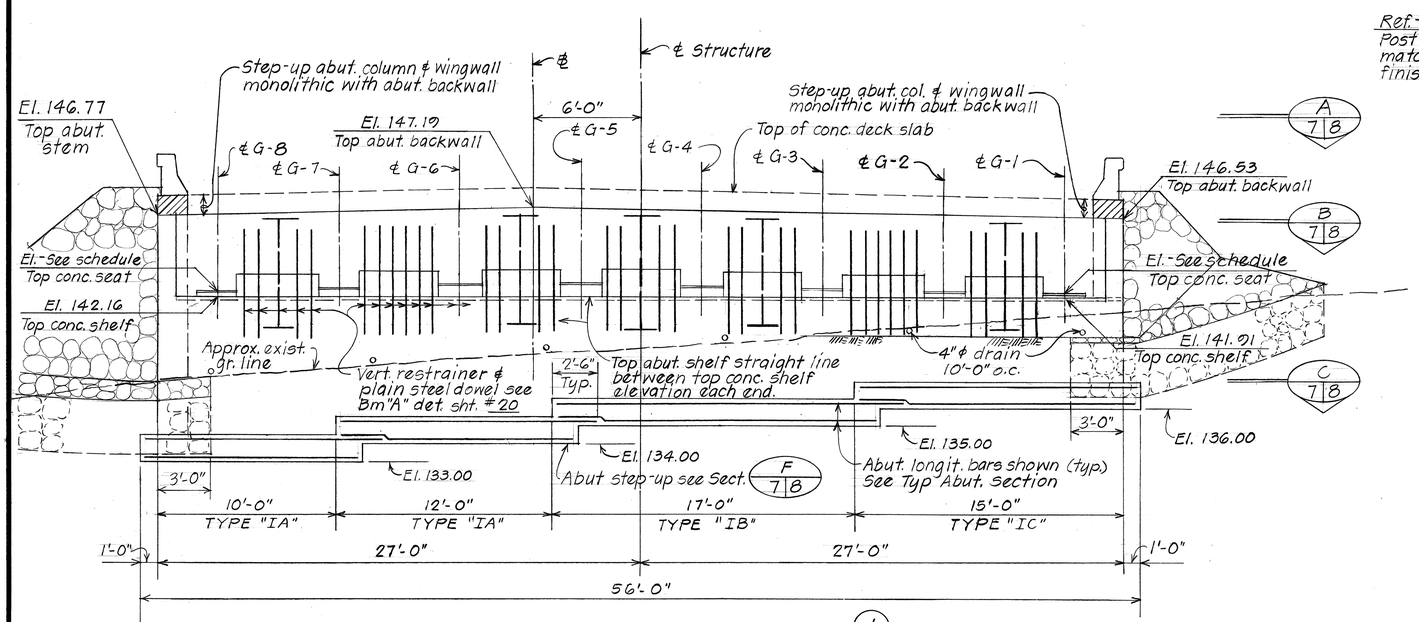

ELEVATION - ABUTMENT (1)

Scale: 1/4" = 1'-0"

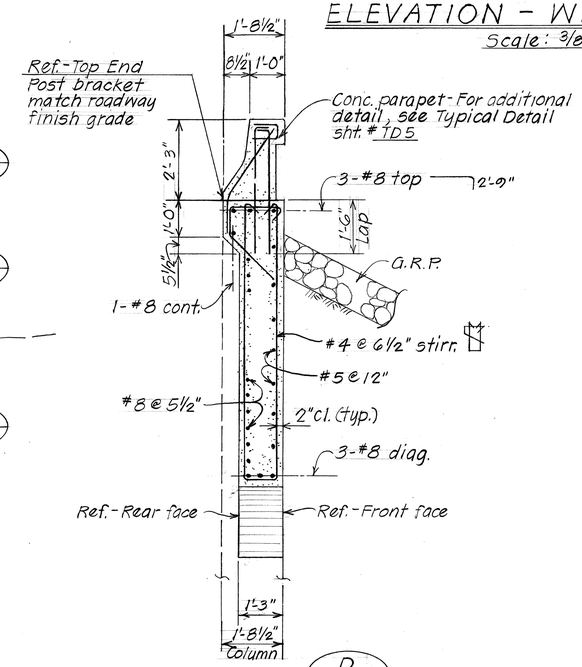

SECTION

Scale: 1/2" = 1'-0"

		DATE
ORIGINAL PLAN	SURVEY PLOTTED BY	
	DRAWN BY L. M.A.	3/84
NOTE BOOK	TRACED BY	
	DESIGNED BY CCO	2/84
No.	QUANTITIES BY	
	CHECKED BY	

STATE OF HAWAII
DEPARTMENT OF TRANSPORTATION
LAND TRANSPORTATION FACILITIES DIVISION

HONOKAHUA STREAM BRIDGE

ABUTMENT (1) PLAN & ELEVATION
WINGWALL NO. 1

HONOAPIILANI HIGHWAY
Pineapple Hill to Honokahua Bay
Proj. No. F-030-1(18)

Scale: As Noted Date: Apr. 1984

SHEET No. 7 OF 22 SHEETS

FED. ROAD DIST. NO.	STATE	FED. AID PROJ. NO.	FISCAL YEAR	SHEET NO.	TOTAL SHEETS
HAWAII	HAW.	F-030-1(18)	1984	95	169

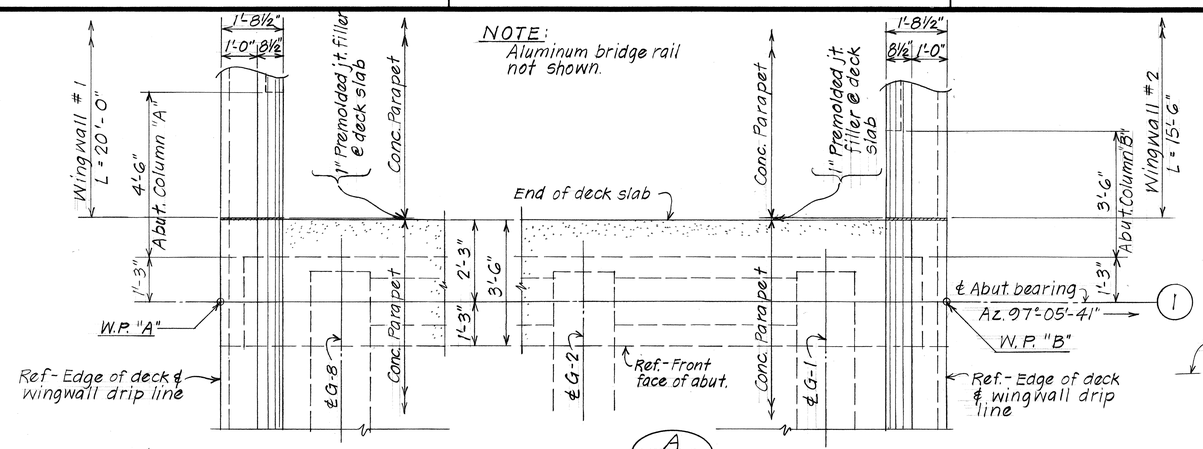

SECTION A 7|8

Scale: 1/2" = 1'-0"

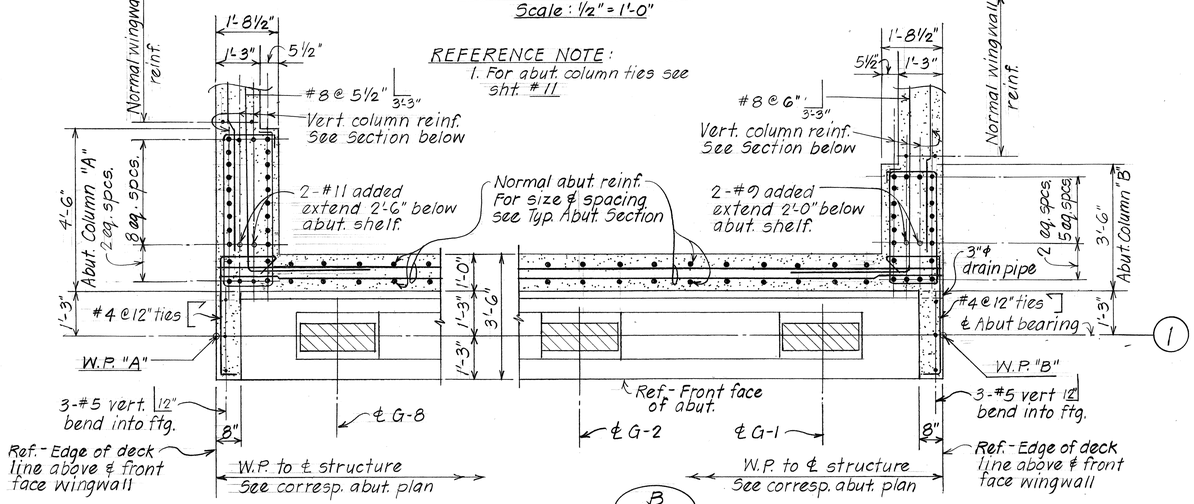

SECTION B 7|8

Scale: 1/2" = 1'-0"

NOTE:
See sht. #11 for col. tie arrangement - abut. columns A & B.

REFERENCE NOTE:
1. For abut. column ties see sht. #11

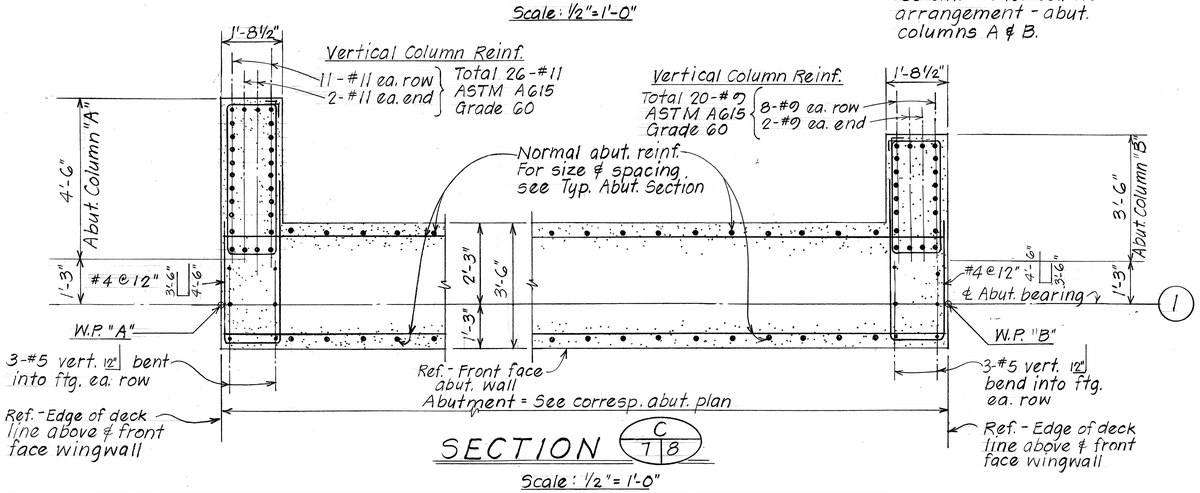

SECTION C 7|8

Scale: 1/2" = 1'-0"

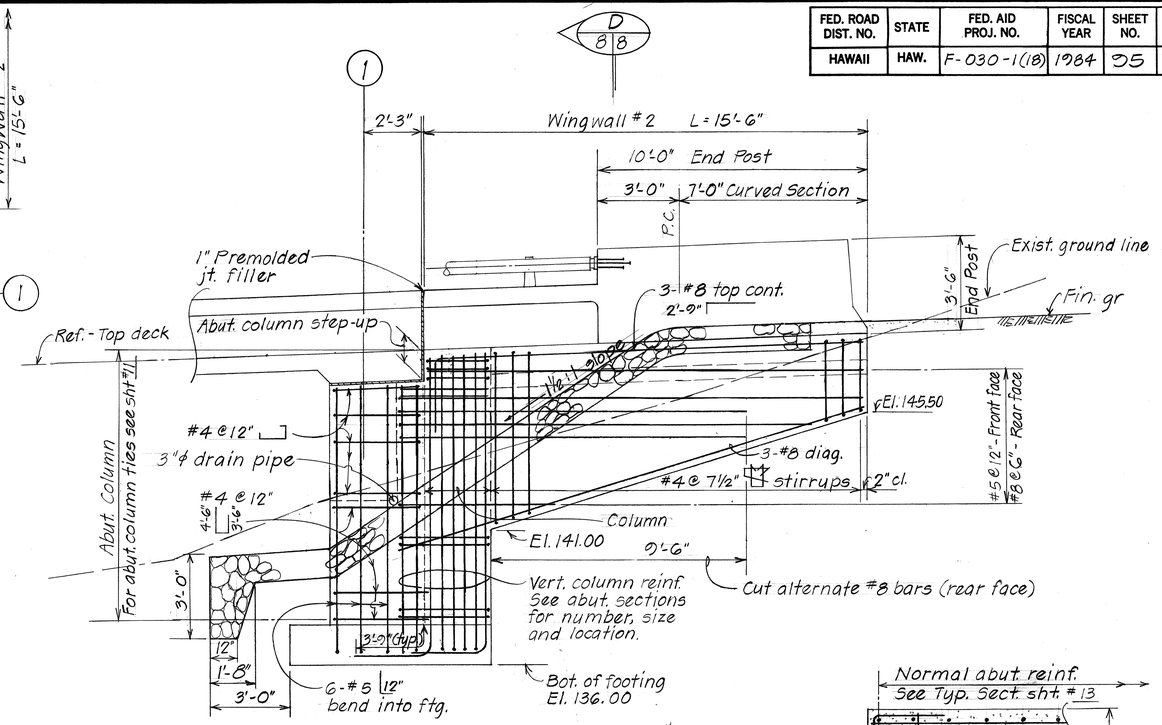

ELEVATION - WINGWALL #2

Scale: 3/8" = 1'-0"

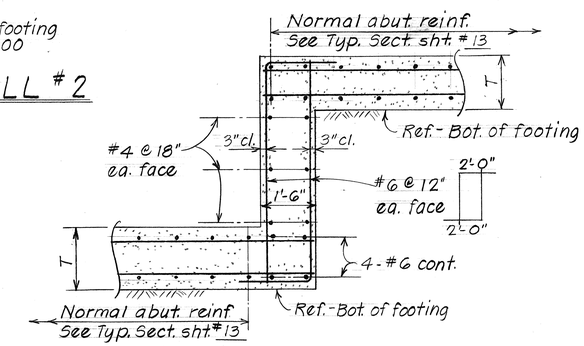

TYP. ABUT. FOOTING STEP-UP DETAIL F 9|8

Scale: 1/2" = 1'-0"

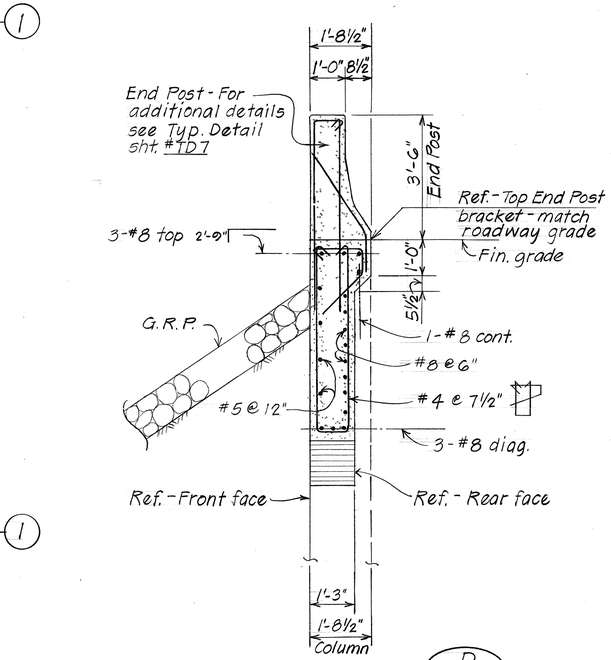

SECTION D 8|8

Scale: 1/2" = 1'-0"

SURVEY PLOTTED BY			DATE
DRAWN BY	L.M.A.		3/84
TRACED BY	L.M.A.		3/84
DESIGNED BY	D.C.O.		3/84
QUANTITIES BY			
CHECKED BY			
ORIGINAL PLAN			
NOTE BOOK			
No.			

STATE OF HAWAII
DEPARTMENT OF TRANSPORTATION
LAND TRANSPORTATION FACILITIES DIVISION

HONOKAHUA STREAM BRIDGE

ABUTMENT (1) - SECTIONS
WINGWALL NO. 2

HONOAPIILANI HIGHWAY
Pineapple Hill to Honokahua Bay
Proj. No. F-030-1(18)

Scale: As Noted Date: Apr. 1984

SHEET No. 8 OF 22 SHEETS

FED. ROAD DIST. NO.	STATE	FED. AID PROJ. NO.	FISCAL YEAR	SHEET NO.	TOTAL SHEETS
HAWAII	HAW.	F-030-1(18)	1984	96	160

Reference Note:

1. Bridge deck & superstructure not shown.
2. For conc. seat, hinge block creep block and elastomeric bearing pad, see sht. #TD3.
3. For concrete end post detail see sht. # TD 7.
4. Top seat elev. see sht. #TD2

CURVE DATA

$\Delta = 40°06'25"$
$R = 10'-0"$
$L_c = 7'-0"$

⊛ For Wingwall #3 Estimated Quantities see Pay Item # 206.5100, 206.7241, 206.8301, 503.1401, 503.1411 507.1210, 507.7020 & 602.0051.

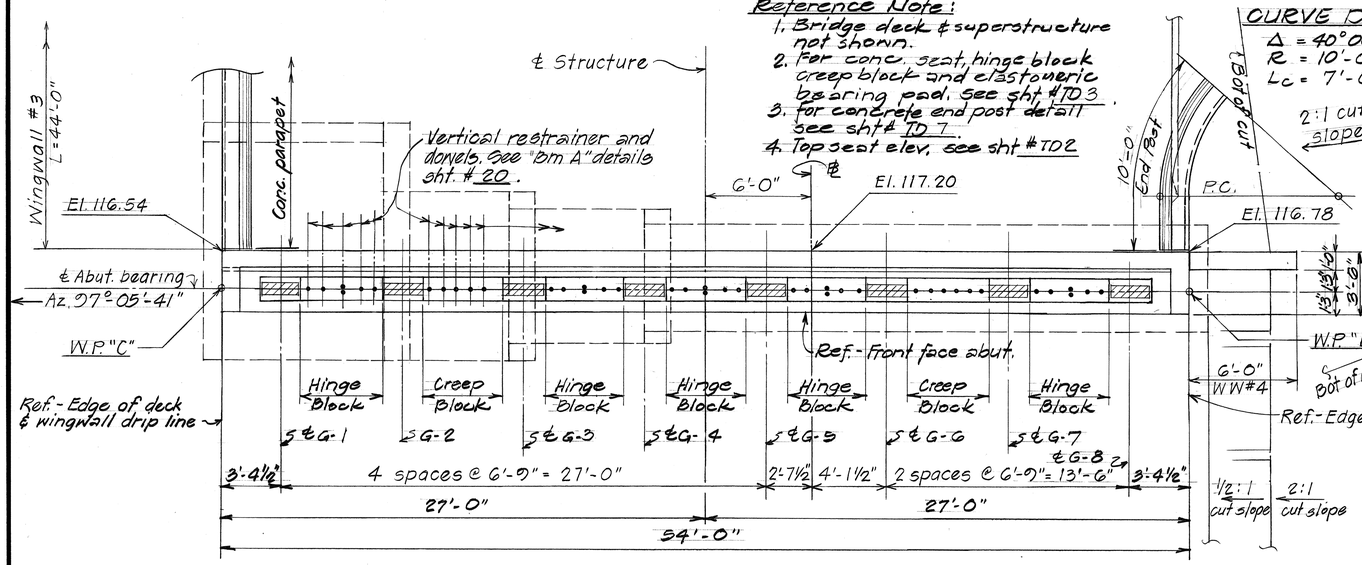

TOP PLAN ~ ABUTMENT ②

Scale: 1/4" = 1'-0"

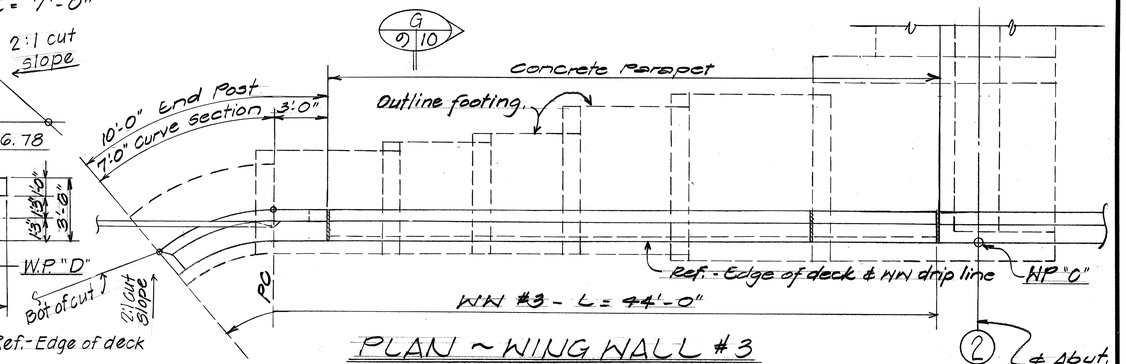

PLAN ~ WING WALL #3

Scale: 1/4" = 1'-0"

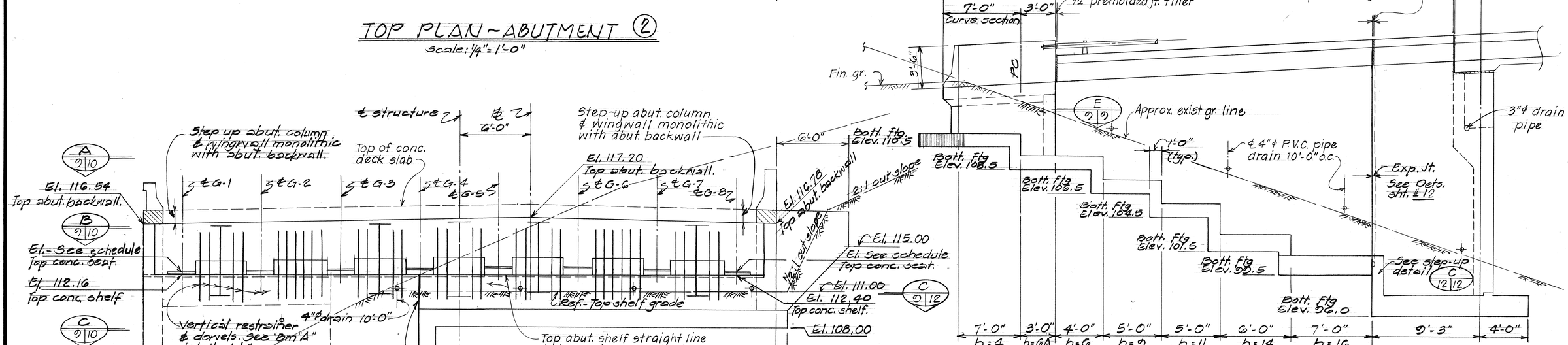

ELEVATION ~ ABUTMENT ②

Scale: 1/4" = 1'-0"

ELEVATION - WINGWALL #3

Scale: 1/4" = 1'-0"

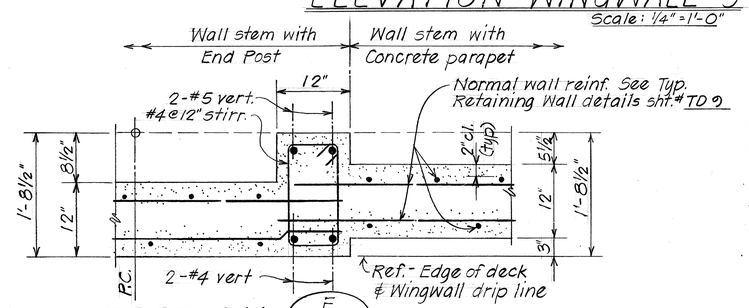

SECTION E 9/9

Scale: 1" = 1'-0"

ORIGINAL PLAN		DATE
	SURVEY PLOTTED BY	
	DRAWN BY S.Y.	3/84
	TRACED BY	"
NOTE BOOK	DESIGNED BY DGO	2/84
	QUANTITIES BY	
No.	CHECKED BY	

STATE OF HAWAII
DEPARTMENT OF TRANSPORTATION
LAND TRANSPORTATION FACILITIES DIVISION

HONOKAHUA STREAM BRIDGE
ABUTMENT ② - PLAN & ELEVATION
WINGWALL NO. 3

HONOAPIILANI HIGHWAY
Pineapple Hill to Honokahua Bay
Proj. No. F-030-1(18)

Scale: As Noted — Date: Apr. 1984

SHEET No. 9 OF 22 SHEETS

FED. ROAD DIST. NO.	STATE	FED. AID PROJ. NO.	FISCAL YEAR	SHEET NO.	TOTAL SHEETS
HAWAII	HAW.	F-030-1(18)	1984	97	169

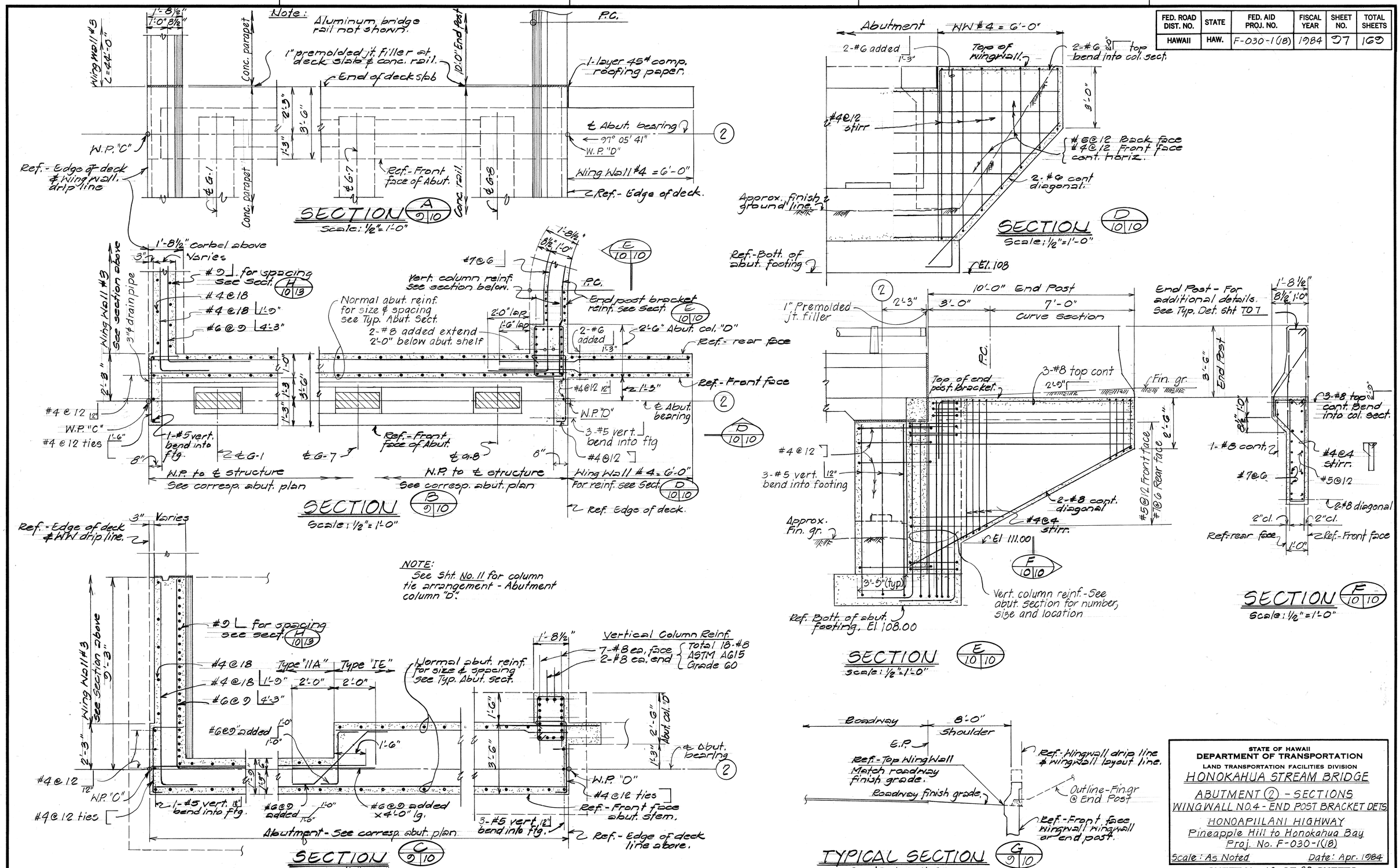

FED. ROAD DIST. NO.	STATE	FED. AID PROJ. NO.	FISCAL YEAR	SHEET NO.	TOTAL SHEETS
HAWAII	HAW.	F-030-1(18)	1984	58	162

SCHEDULE - ABUTMENT COLUMN TIES

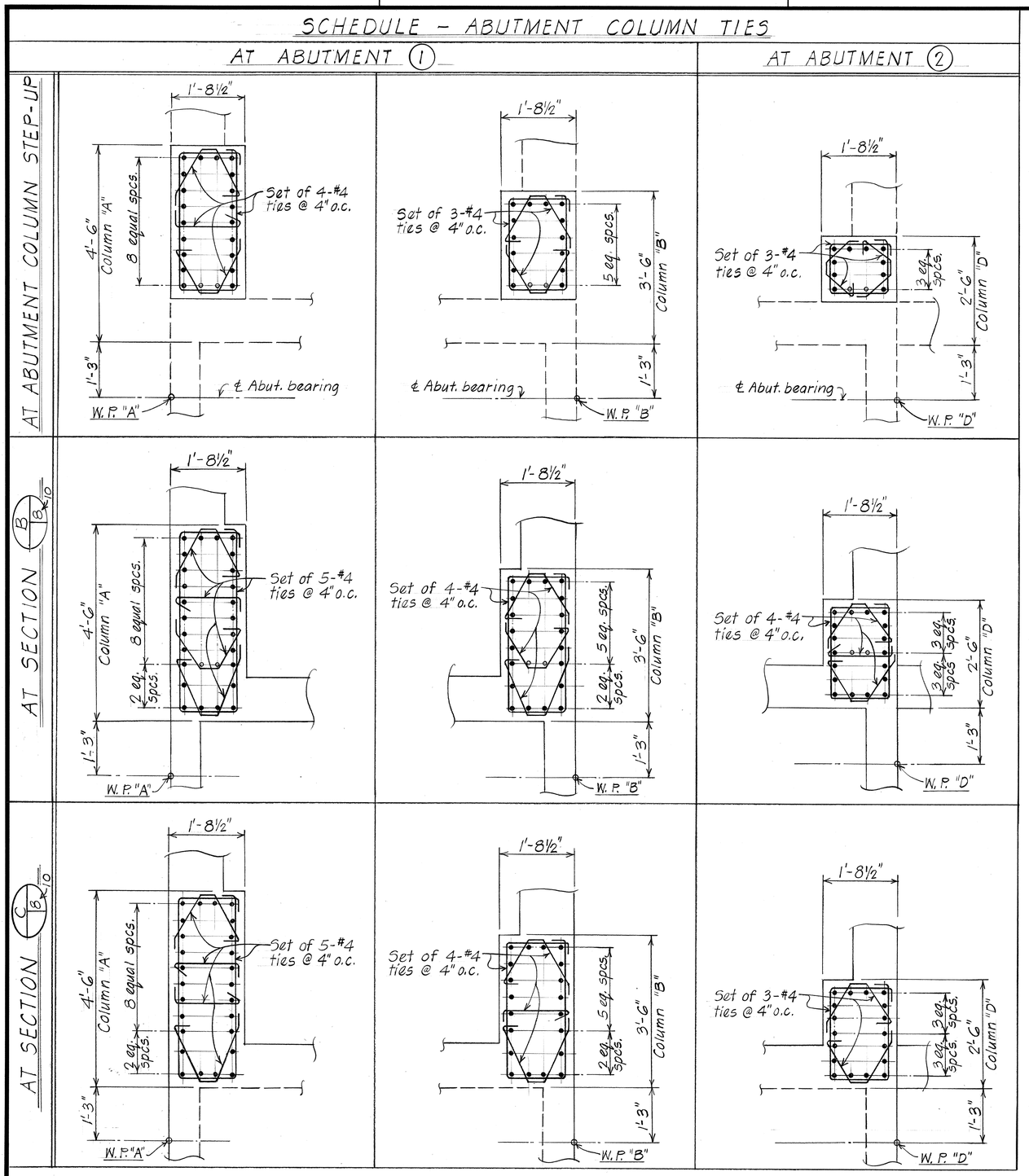

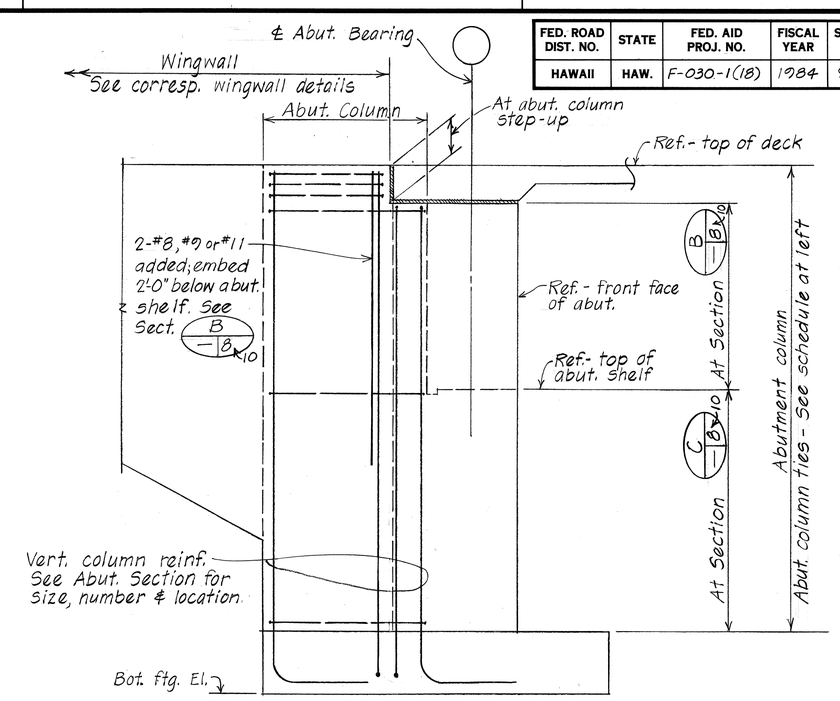

TYPICAL ELEVATION - ABUTMENT COLUMN

Not to Scale

ORIGINAL PLAN		DATE
	SURVEY PLOTTED BY	
	DRAWN BY N.Y.	4/84
NOTE BOOK	TRACED BY	
	DESIGNED BY D.C.O.	3/84
No.	QUANTITIES BY	
	CHECKED BY	

STATE OF HAWAII
DEPARTMENT OF TRANSPORTATION
HIGHWAYS DIVISION

HONOKAHUA STREAM BRIDGE

ABUTMENT COLUMN ELEVATION & COLUMN TIES SCHEDULE

HONOAPIILANI HIGHWAY
Pineapple Hill to Honokahua Bay
Proj. No. F-030-1(18)

Scale: As Noted Date: Apr. 1984

SHEET No. 11 OF 22 SHEETS

FED. ROAD DIST. NO.	STATE	FED. AID PROJ. NO.	FISCAL YEAR	SHEET NO.	TOTAL SHEETS
HAWAII	HAW.	F-030-1(18)	1984	99	160

NOTE:
Spacing of joints:
Expansion - 90'-0" max.
Contraction - 30'-0" max. except where conc. railing or curb occurs, match with railing joint above.
For alternate contraction joint and control joint details - See Standard Bridge Details.

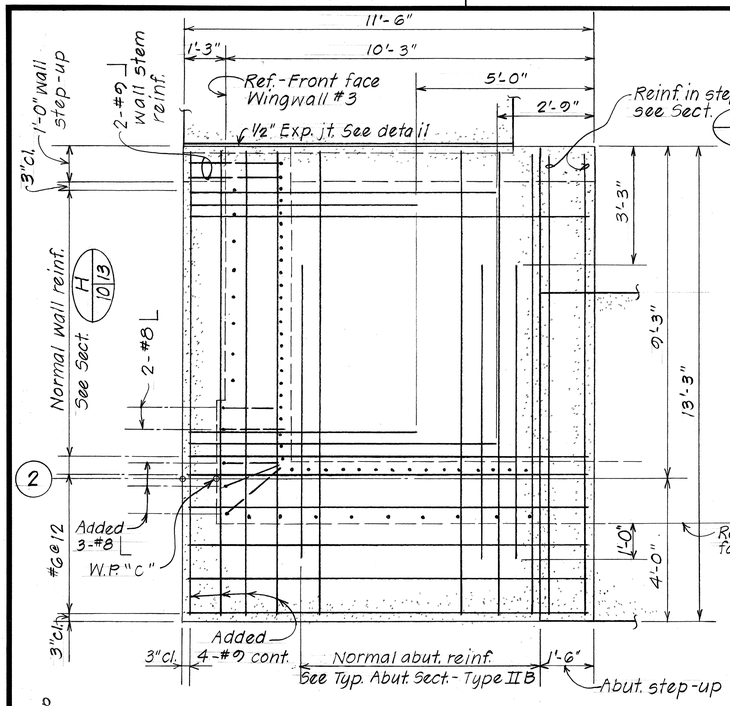

TOP LAYER REINFORCEMENT

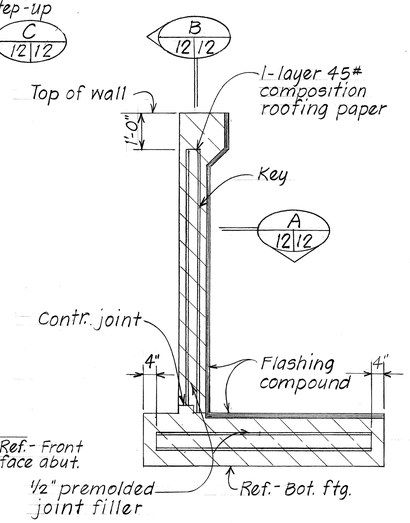

JOINT ELEVATION

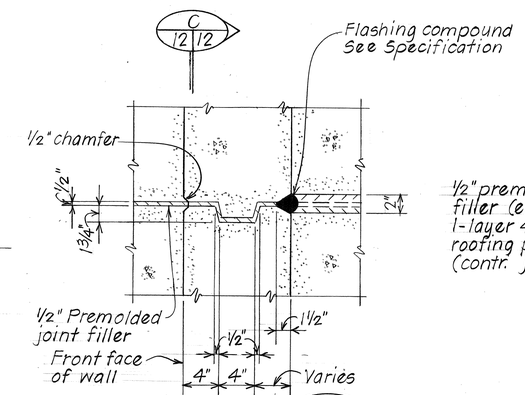

SECTION A 12|12

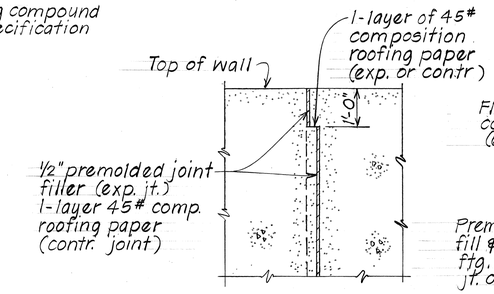

SECTION B 12|12

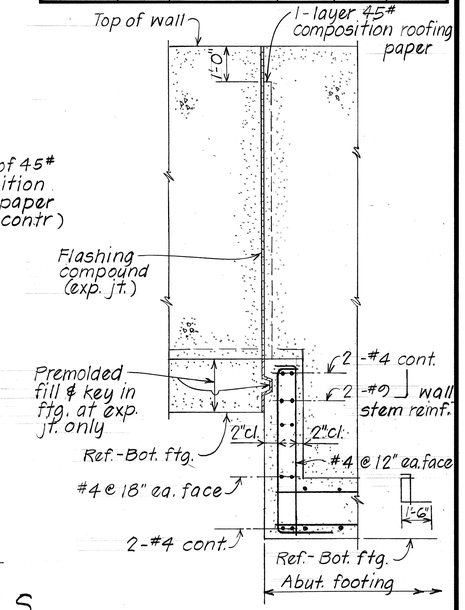

SECTION C 12|12

TYPICAL WALL EXPANSION JOINT DETAILS
No Scale

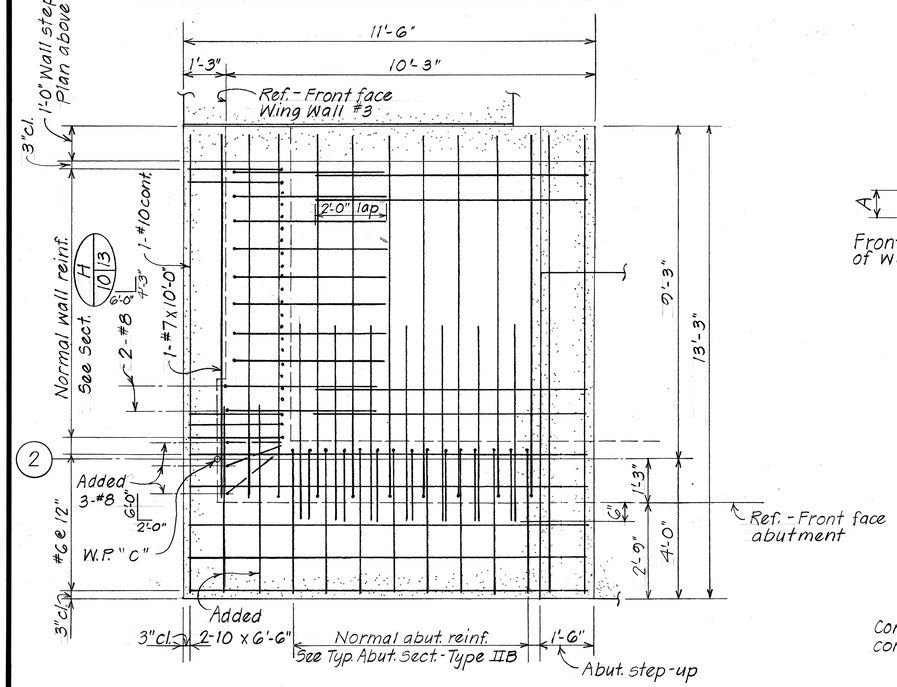

BOTTOM LAYER REINFORCEMENT

PART PLAN D 9|12 -ABUT. 2 FOOTING REINFORCEMENT
Scale: 1/2" = 1'-0"

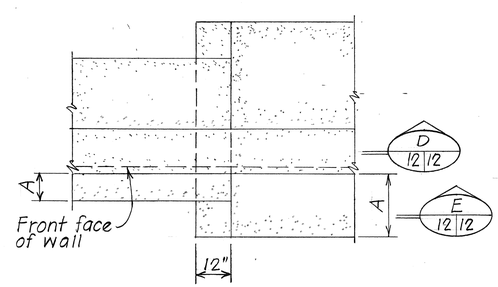

PLAN

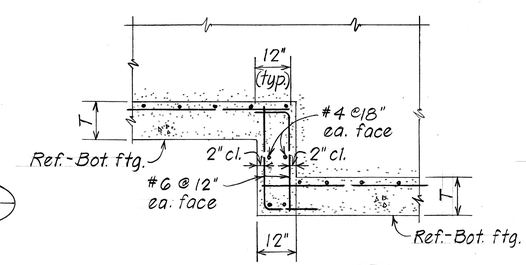

SECTION D 12|12

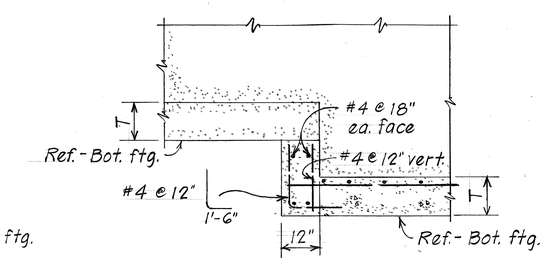

SECTION E 12|12

TYPICAL WALL FOOTING STEP-UP DETAILS
No Scale

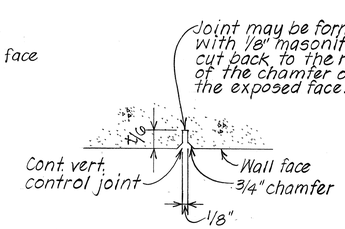

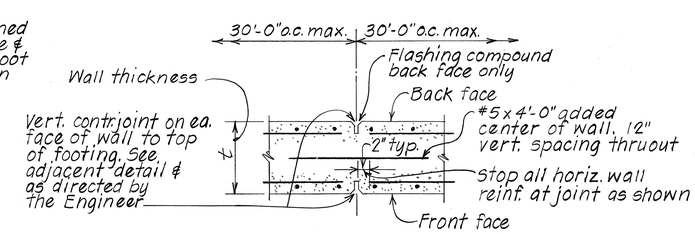

CONTROL JOINT DETAILS
No Scale

SURVEY PLOTTED BY	
DRAWN BY	LMA
TRACED BY	LMA
DESIGNED BY	ECO
QUANTITIES BY	
CHECKED BY	
DATE	3/84

ORIGINAL PLAN
NOTE BOOK No.

STATE OF HAWAII
DEPARTMENT OF TRANSPORTATION
HIGHWAYS DIVISION

HONOKAHUA STREAM BRIDGE
ABUTMENT 2 FOOTING REINFORCING
TYP. WALL STEP-UP & JT. DETAILS

HONOAPIILANI HIGHWAY
Pineapple Hill to Honokahua Bay
Proj. No. F-030-1(18)

Scale: As Noted Date: Apr. 1984

SHEET No. 12 OF 22 SHEETS

FED. ROAD DIST. NO.	STATE	FED. AID PROJ. NO.	FISCAL YEAR	SHEET NO.	TOTAL SHEETS
HAWAII	HAW.	F-030-1(18)	1984	100	163

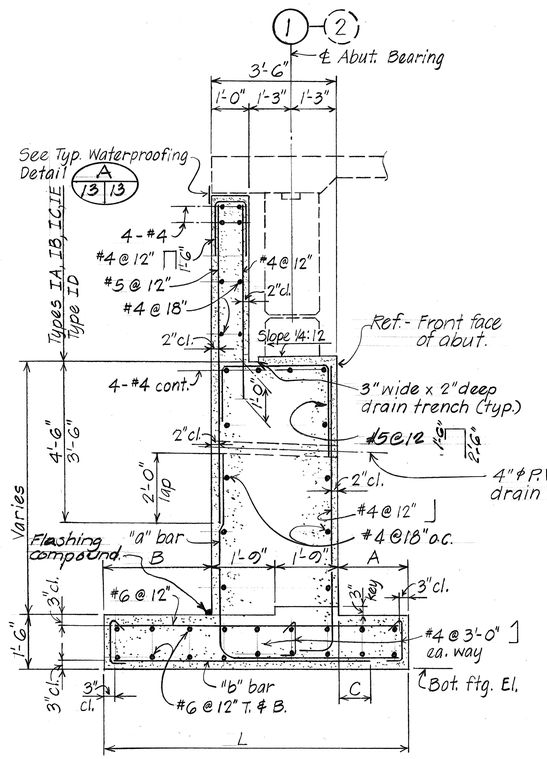

TYPE I

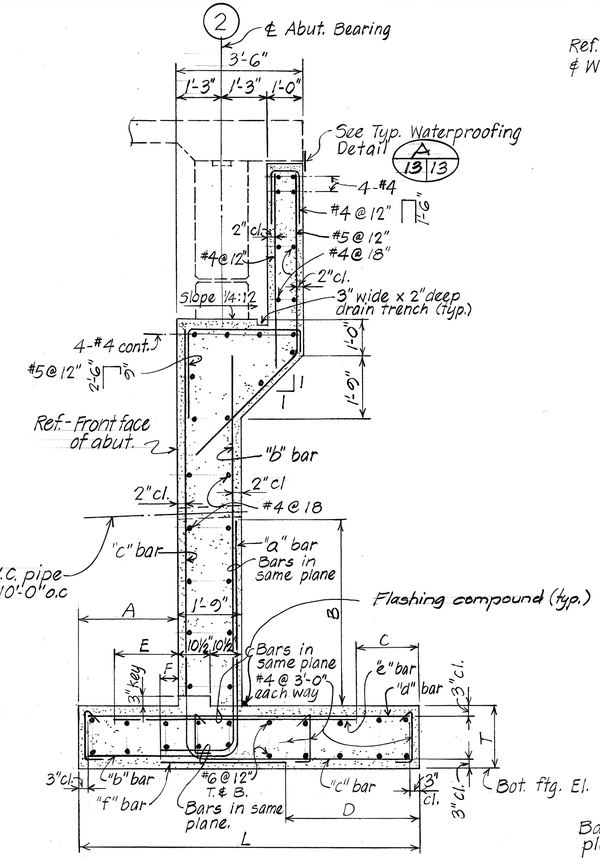

TYPE II

TYPICAL ABUTMENT SECTIONS

Scale: 1/2" = 1'-0"

ABUTMENT TYPE I - SCHEDULE OF DIMENSIONS & REINF. STEEL								
	DIMENSIONS				REINFORCING		Max. Soil Pressure	Group Loading
TYPE	L	A	B	C	"a"	"b"		
IA	9'-6"	2'-6"	3'-6"	2'-3"	#7 @ 12"	#6 @ 12"	6.28 ksf	I
IB	8'-6"	2'-0"	3'-0"	1'-9"	#6 @ 12"	#6 @ 12"	6.54 ksf	I
IC	7'-6"	1'-6"	2'-6"	0'-3"	#6 @ 12"	#6 @ 12"	7.06 ksf	I
ID	6'-0"	1'-0"	1'-6"	0'-3"	#6 @ 12"	#6 @ 12"	8.07 ksf	I
IE	7'-6"	1'-9"	2'-3"	0'-3"	#7 @ 12"	#6 @ 12"	7.65 ksf	IV

ABUTMENT TYPE II - SCHEDULE OF DIMENSIONS & REINFORCING STEEL																
	DIMENSIONS								REINFORCING						Max. Soil Pressure	Group Loading
TYPE	L	T	A	B	C	D	E	F	"a"	"b"	"c"	"d"	"e"	"f"		
IIA	9'-6"	1'-9"	2'-9"	5'-3"	1'-9"	1'-9"	0'-3"	0'-6"	#9 @ 12"	#9 @ 12"	#6 @ 12"	#6 @ 12"	#6 @ 12"	#5 @ 12"	7.44 ksf	I
IIB	13'-3"	2'-0"	2'-9"	7'-0"	3'-3"	5'-6"	1'-0"	0'-6"	#10 @ 11"	#10 @ 11"	#7 @ 12"	#8 @ 12"	#8 @ 12"	#5 @ 12"	7.68 ksf	I

WALL - SCHEDULE OF DIMENSIONS AND REINFORCING STEEL												
	DIMENSIONS						REINFORCING					Max. Soil Pressure
H	L	T	A	B	C	D	"a"	"b"	"c"	"d"	"e"	
16'	9'-3"	1'-8"	1'-3"	8'-6"	2'-9"	1'-8"	#9 @ 12"	#9 @ 12"	#8 @ 11"	#8 @ 11"	#4 @ 18"	7.42 ksf
14'	8'-3"	1'-5"	1'-0"	7'-6"	2'-9"	1'-8"	#8 @ 12"	#8 @ 12"	#8 @ 12"	#8 @ 12"	#4 @ 18"	7.89 ksf
11'	6'-9"	1'-2"	1'-0"	6'-0"	2'-3"	2'-6"	#8 @ 11"	#8 @ 11"	#7 @ 12"	#7 @ 12"	#8 @ 6"	7.05 ksf
9'	6'-3"	1'-2"	1'-0"	6'-0"	2'-0"	1'-8"	#7 @ 11"	#7 @ 11"	#5 @ 10"	#5 @ 10"	#4 @ 18"	6.21 ksf
6'	5'-9"	1'-2"	⊛1'-0"	5'-6"	–	1'-8"	#6 @ 12"	#6 @ 12"	#5 @ 10"	–	#4 @ 18"	6.41 ksf
4'	5'-0"	1'-2"	0'-9"	–	–	1'-8"	#5 @ 6"	–	#4 @ 12"	–	#4 @ 18"	14.35 ksf

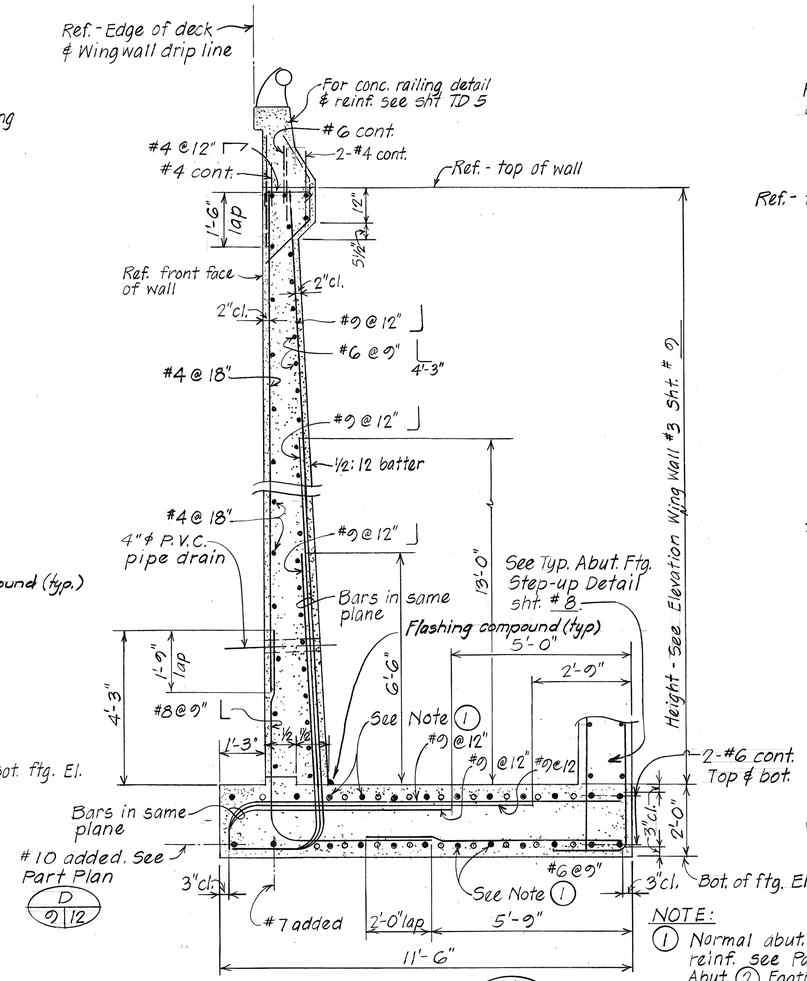

SECTION

H 10|13 12

Scale: 1/2" = 1'-0"

NOTE:

1. Normal abut. Type II B reinf. see Part Plan Abut. 2 Footing Reinf. Sht. # 12

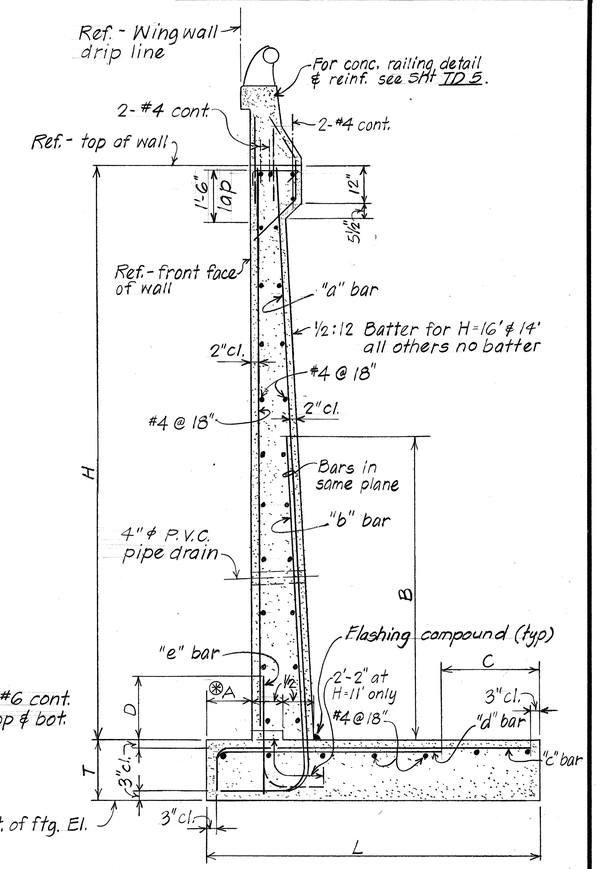

⊛ Dim. & reinf. steel for H = 6'A similar to H = 6' except Dim. A = 9"

WALL SECTION

Scale: 1/2" = 1'-0"

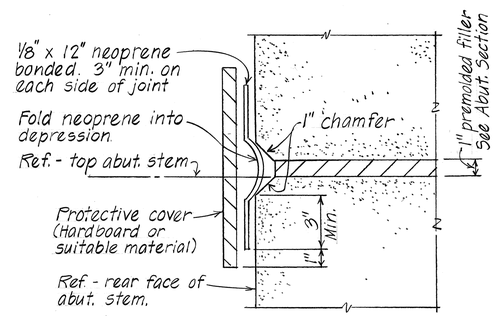

TYPICAL WATERPROOFING DETAIL

A 13|13 20

Not to Scale

NOTE: Waterproofing assemblage incidental to concrete.

ORIGINAL PLAN	SURVEY PLOTTED BY	DATE 3/84
	DRAWN BY	"
	TRACED BY	" 2/84
NOTE BOOK	DESIGNED BY	ECO
No.	QUANTITIES BY	
	CHECKED BY	

STATE OF HAWAII
DEPARTMENT OF TRANSPORTATION
LAND TRANSPORTATION FACILITIES DIVISION

HONOKAHUA STREAM BRIDGE

TYP. ABUTMENT & WALL SECTIONS

HONOAPIILANI HIGHWAY
Pineapple Hill to Honokahua Bay
Proj. No. F-030-1(18)

Scale: As Noted — Date: Apr. 1984

SHEET No. 13 OF 22 SHEETS

FED. ROAD DIST. NO.	STATE	FED. AID PROJ. NO.	FISCAL YEAR	SHEET NO.	TOTAL SHEETS
HAWAII	HAW.	F-030-1(18)	1984	101	160

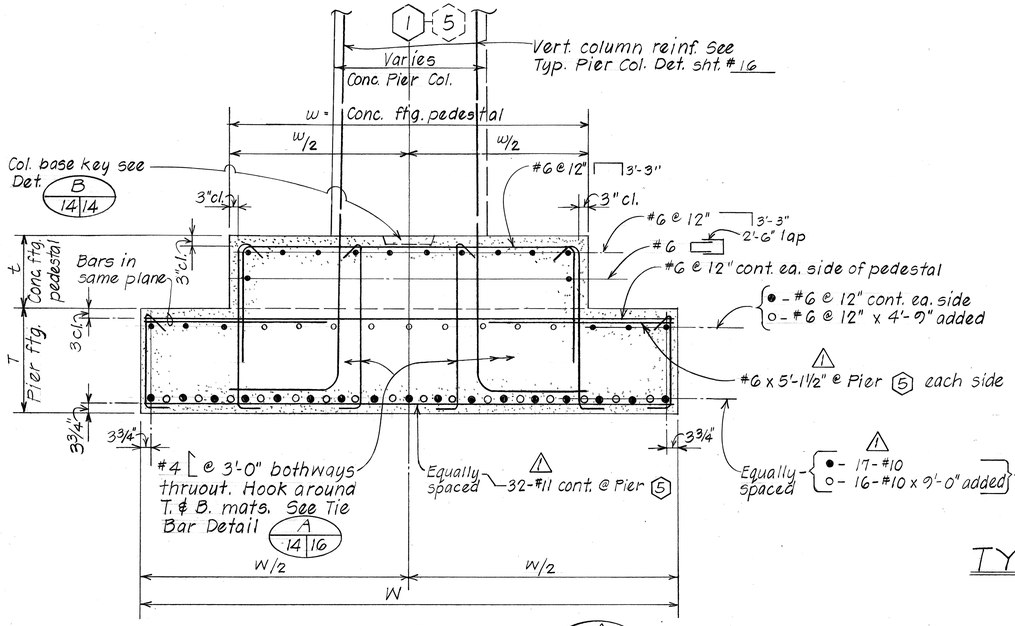

TYPICAL SECTION A 14|14

Scale: 1/2" = 1'-0"

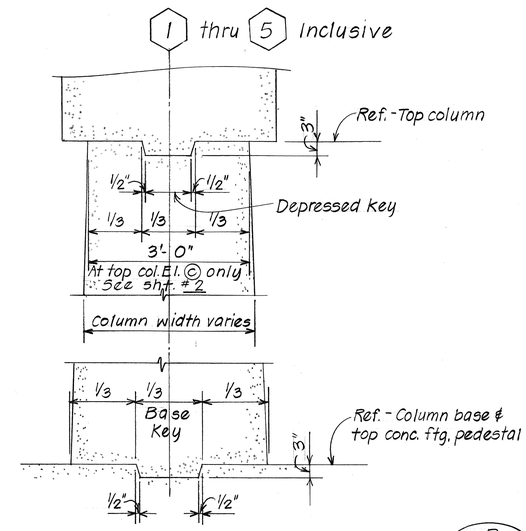

TYPICAL COLUMN KEY DETAIL B 14|14

Scale: 3/4" = 1'-0"

PIER FOOTING & PEDESTAL SIZE			
ITEM \ LOCATION		1	PIER 5
PEDESTAL SIZE	l		30'-0"
	w		10'-0"
	t		2'-0"
FOOTING SIZE	L		35'-0"
	W		15'-0"
	T		3'-0"

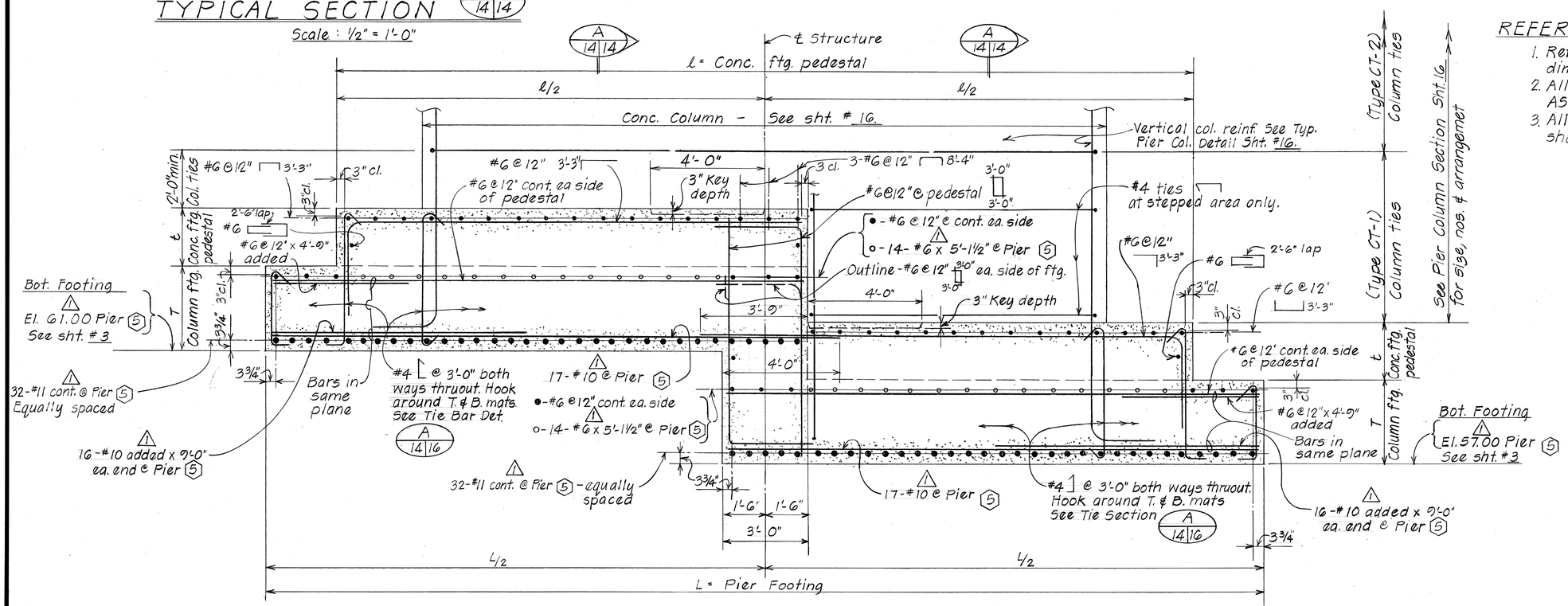

1 ELEVATION - PIER 5

Scale: 1/2" = 1'-0"

REFERENCE NOTE:

1. Refer to sht. #16 for pier column dimensions & reinf. details.
2. All footing reinf. steel shall be ASTM A615 Grade 60.
3. All footing & pedestal concrete shall be 5,000 psi.

DATE	REVISION
5-1-85	1 Omit pier 1 reinforcing & dimensions. Revised footing title & title block.

STATE OF HAWAII
DEPARTMENT OF TRANSPORTATION
HIGHWAYS DIVISION

HONOKAHUA STREAM BRIDGE

1 PIER 5 - FOOTING DETAIL

HONOAPIILANI HIGHWAY
Pineapple Hill to Honokahua Bay
Proj. No. F-030-1(18)

Scale: As Noted — Date: Apr. 1984

SHEET No. 14 OF 22 SHEETS

ORIGINAL PLAN		DATE
SURVEY PLOTTED BY		
DRAWN BY	L.M.A.	3/84
TRACED BY	D.C.C.	3/84
DESIGNED BY		
QUANTITIES BY		
CHECKED BY		
NOTE BOOK		
No.		

CO 101

FED. ROAD DIST. NO.	STATE	FED. AID PROJ. NO.	FISCAL YEAR	SHEET NO.	TOTAL SHEETS
HAWAII	HAW.	F-030-1(18)	1984	102	102

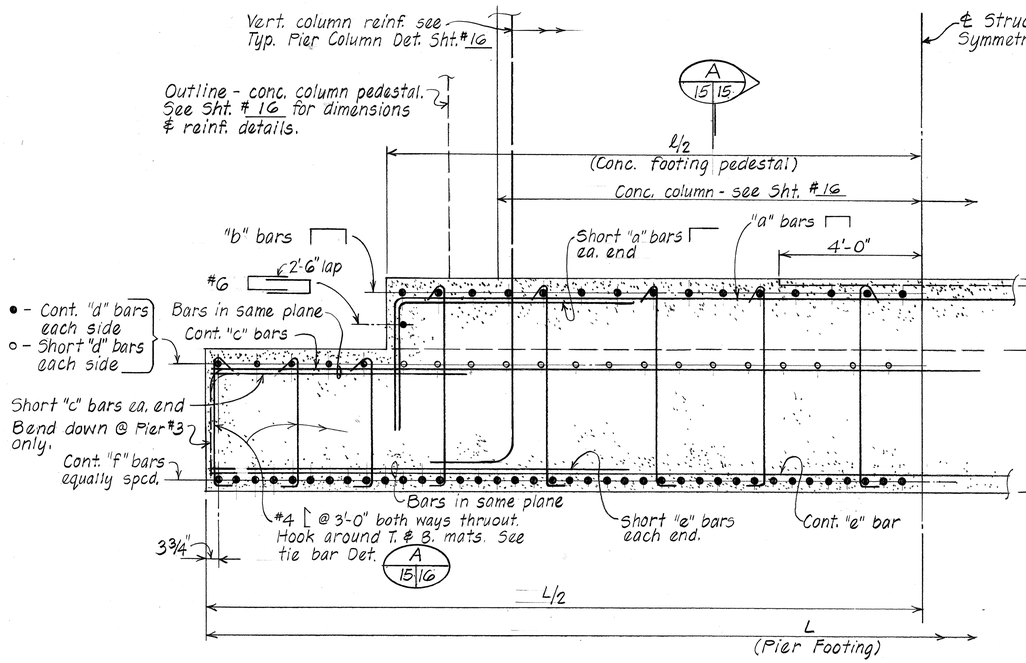

ELEVATION

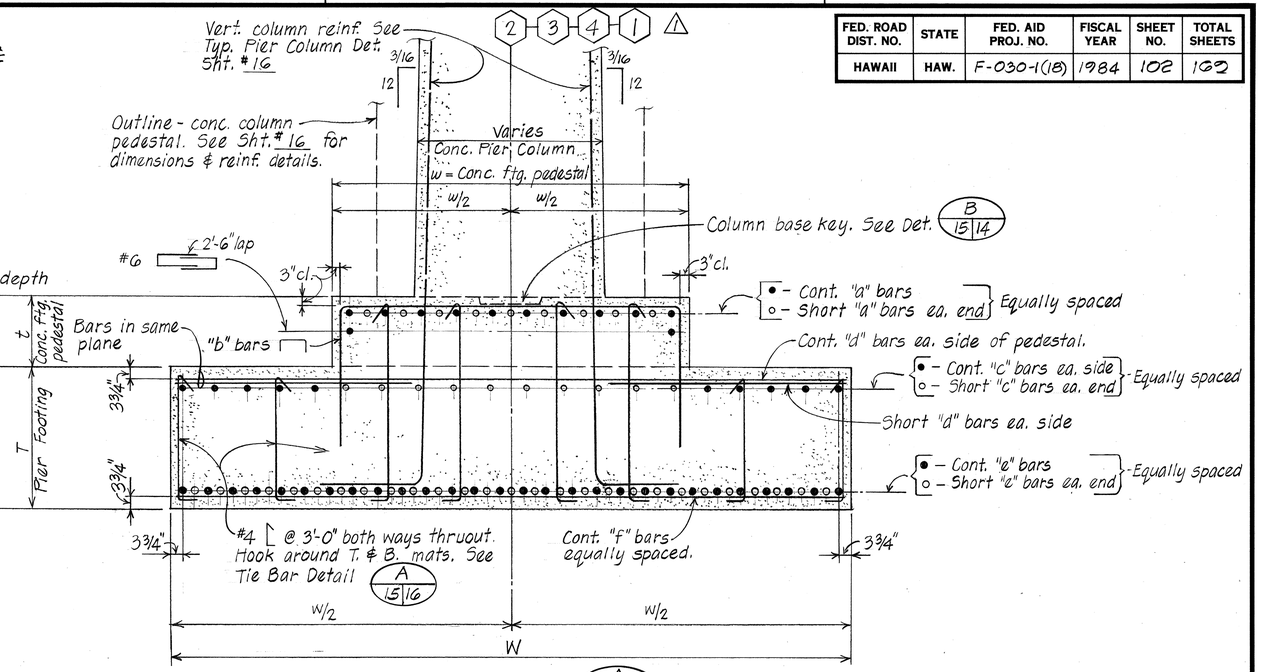

SECTION A 15/15

AT PIERS 1, 2, 3 & 4

Scale: 1/2" = 1'-0"

SCHEDULE - PIER FOOTING, FOOTING PEDESTAL SIZE & REINFORCING

ITEM			LOCATION 2	LOCATION 3	LOCATION 4	LOCATION 1
CONCRETE FOOTING PEDESTAL	Size	ℓ	30'-0"	36'-0"	30'-0"	30'-0"
		w	10'-0"	10'-6"	10'-0"	10'-0"
		t	2'-0"	2'-0"	2'-0"	2'-0"
	Reinforcing	"a"	10-#8 ⌐ 4'-0"	#6 @ 12" ⌐ 3'-3"	#6 @ 12" ⌐ 3'-3"	#6 @ 12" ⌐ 3'-3"
		Short "a"	9-#8 6'-6" ⌐ 4'-0"	—	—	—
		"b"	#8 @ 12" ⌐ 4'-0"	#6 @ 12" ⌐ 3'-3"	#6 @ 12" ⌐ 3'-3"	#6 @ 12" ⌐ 3'-3"
PIER FOOTING	Size	L	40'-0"	39'-6"	38'-6"	35'-0"
		W	19'-0"	18'-6"	17'-3"	15'-0"
		T	4'-0"	4'-0"	3'-9"	3'-0"
	Reinforcing	"c"	5-#6 cont. ea. side	4-#6 ea. side ⌐ 3'-3"	4-#6 cont. ea. side	3-#6 cont. ea. side
		Short "c"	10-#6 x 7'-0" ea. end	11-#6 3'-9" ⌐ 3'-2"	9-#6 x 6'-3" ea. end	9-#6 x 4'-9" ea. side
		"d"	5-#6 cont. ea. side	2-#6 cont. ea. side	5-#6 cont. ea. side	3-#6 @ 12" ea. side
		Short "d"	31-#6 x 6'-6" ea. side	36-#6 ea. side 6'-0" ⌐ 3'-3"	29-#6 x 5'-7" ea. side	29-#6 x 4'-9 ea. side
		"e"	28-#11 cont.	20-#9 cont.	22-#11 cont.	16-#10 cont.
		Short "e"	27-#11 x 12'-3" ea. end	19-#9 x 10'-6" ea. end	21-#11 x 11'-6" ea. end	15-#10 x 9'-0" ea. end
		"f"	77-#11 cont.	63-#11 cont.	63-#11 cont.	51-#11 cont.

REFERENCE NOTES:

1. Refer to Sht. #16 for pier column dimensions & reinf. details.
2. All footing reinf. steel shall be ASTM A615 Grade 60.
3. All footing & pedestal concrete shall be 5000 psi.

DATE	REVISION
5-1-85	1 Added pier 1 to pier footing schedule.

STATE OF HAWAII
DEPARTMENT OF TRANSPORTATION
HIGHWAYS DIVISION

HONOKAHUA STREAM BRIDGE

1 PIERS 1, 2, 3 & 4 - FOOTING DETAILS

HONOAPIILANI HIGHWAY
Pineapple Hill to Honokahua Bay
Proj. No. F-030-1(18)

Scale: As Noted Date: Apr. 1984

SHEET No. 15 OF 22 SHEETS

C0102

	DATE
SURVEY PLOTTED BY	
DRAWN BY N.Y.	3/84
TRACED BY N.Y.	3/84
DESIGNED BY D.C.O.	3/84
QUANTITIES BY	
CHECKED BY	

ORIGINAL PLAN
NOTE BOOK
No.

FED. ROAD DIST. NO.	STATE	FED. AID PROJ. NO.	FISCAL YEAR	SHEET NO.	TOTAL SHEETS
HAWAII	HAW.	F-030-1(18)	1984	103	169

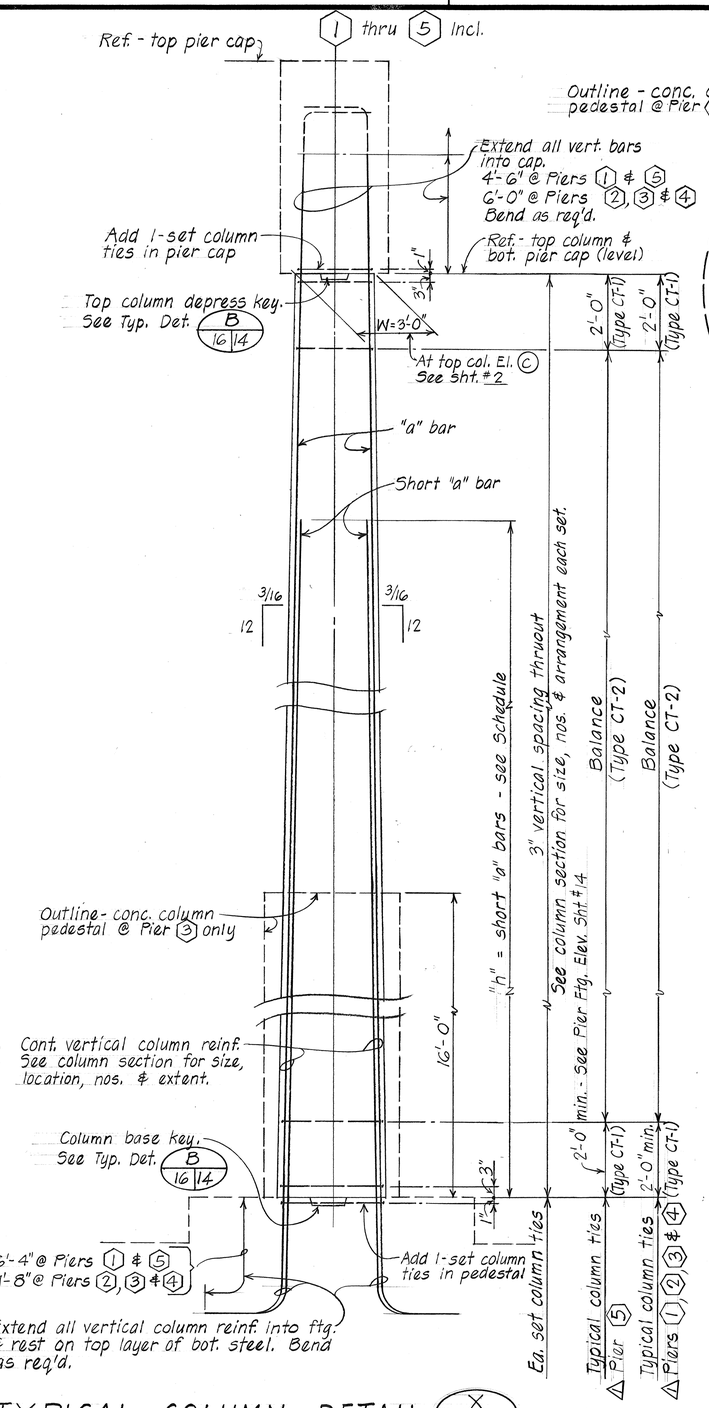

TYPICAL COLUMN DETAIL X 16/16 Not to scale

NOTE:
1. Refer to Sht. #17 for pier cap dimensions & reinf. details.
2. All column reinf. to be ASTM A615, Grade 60.
3. Alternate column ties - hook location on opposite end each layer.
4. All pier column & column pedestal concrete shall be 5,000 psi.

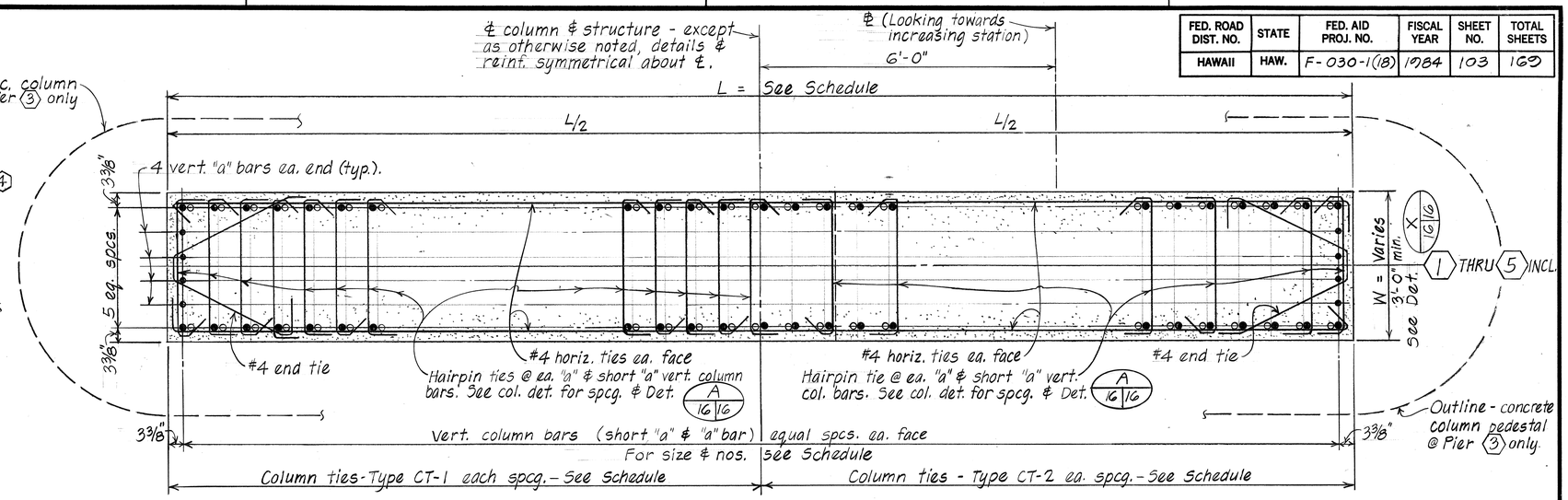

HALF COLUMN SECTION AT CT-1 HALF COLUMN SECTION AT CT-2

TYPICAL CONCRETE PIER COLUMN SECTION Scale: 3/4" = 1'-0"

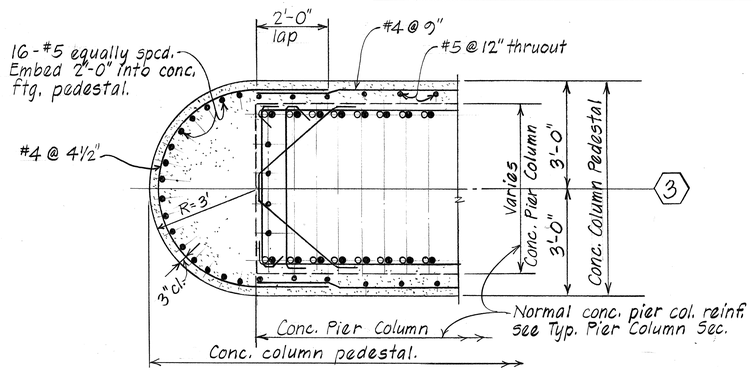

TYPICAL END SECTION
CONCRETE COLUMN PEDESTAL AT PIER 3
Scale: 1/2" = 1'-0"

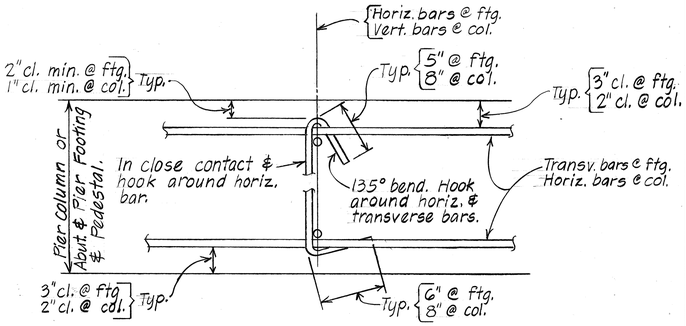

A 16/16 14, 15 TIE BAR DETAIL Not to Scale

* See sht. #14 for limits of these ties in stepped-up area

SCHEDULE - PIER COLUMN SIZE & REINFORCING

ITEM / LOCATION		TOP COLUMN ELEVATION	COLUMN SIZE H	L	W	REINFORCING STEEL: Vertical Reinforcing: Short "a" bars "h"	Size & Nos. Short "a" & "a" bars	Total Vertical Bars	#4 horiz. ties - set each spcg.: Ties / Type	8" 8"	18" 8"	8" 8"
Pier 1	c	129.20	See Sht. #2	24'-0"	Varies See X 16/16 Det.	34'-0" △	28-#11 bundled e.f.	120-#11 {64 "a" bars, 56 short "a"	CT-1	△ 2	2	28
	d	129.08							CT-2	2	2	15
Pier 2	c	124.13	DO	DO	DO	48'-0"	37-#14 bundled e.f.	156-#14 {82 "a" bars, 74 short "a"	CT-1	2	2	37
	d	124.01							CT-2	2	2	19
Pier 3	c	119.28	DO	DO	DO	59'-0"	31-#14 bundled e.f.	132-#14 {70 "a" bars, 62 short "a"	CT-1	2	2	31
	d	119.16							CT-2	2	2	16
Pier 4	c	114.21	DO	DO	DO	59'-0"	28-#14 bundled e.f.	120-#14 {64 "a" bars, 56 short "a"	CT-1	2	2	28
	d	114.09							CT-2	2	2	15
Pier 5	c	109.36	DO	DO	DO	39'-0" 35'-0"	32-#11 bundled e.f.	136-#11 {72 "a" bars, 64 short "a"	CT-1	* 2	2	32
	d	109.24							CT-2	2	2	17

DATE	REVISION
5-1-85	△ Revised typical column detail & column schedule pier 1 only.

STATE OF HAWAII
DEPARTMENT OF TRANSPORTATION
LAND TRANSPORTATION FACILITIES DIVISION

HONOKAHUA STREAM BRIDGE
TYPICAL PIER COLUMN DETAILS

HONOAPIILANI HIGHWAY
Pineapple Hill to Honokahua Bay
Proj. No. F-030-1(18)

Scale: As Noted Date: Apr. 1984

SHEET No. 16 OF 22 SHEETS

ORIGINAL PLAN		DATE
	SURVEY PLOTTED BY	
	DRAWN BY	3/84
	TRACED BY N.Y.	3/84
	DESIGNED BY D.C.O.	3/84
NOTE BOOK	QUANTITIES BY	
No.	CHECKED BY	

CO 103

FED. ROAD DIST. NO.	STATE	FED. AID PROJ. NO.	FISCAL YEAR	SHEET NO.	TOTAL SHEETS
HAWAII	HAW.	F-030-1(18)	1984	104	169

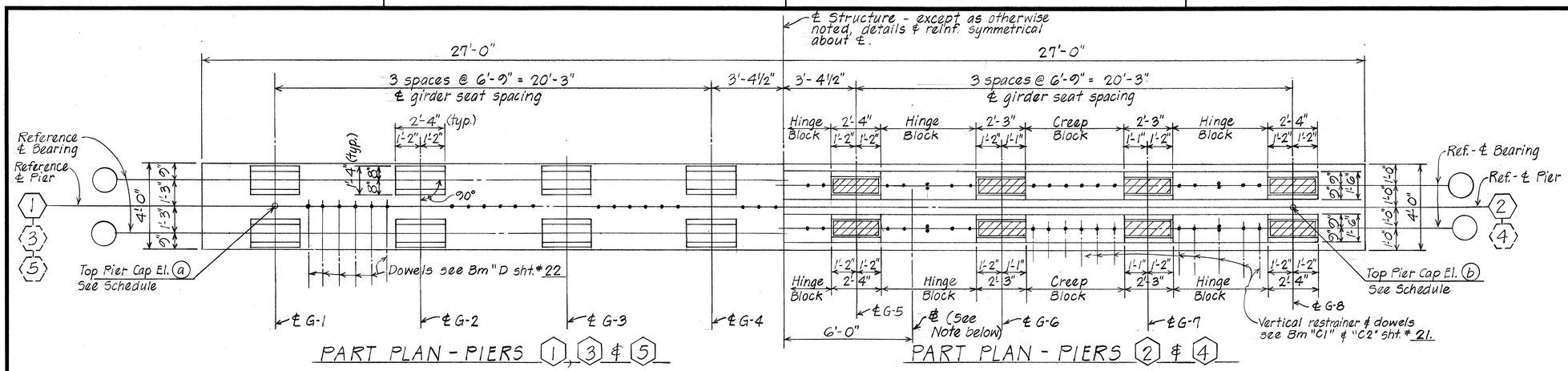

PART PLAN - PIERS 1, 3 & 5

PART PLAN - PIERS 2 & 4

PLAN

Scale: 3/8" = 1'-0"

TOP PIER CAP ELEVATION SCHEDULE (AT ℄ PIER)

PIER	El. ⓐ	El. ⓑ		
1	137.02	137.26		
2	131.95	132.19		
3	127.10	127.34		
4	122.03	122.27		
5	117.18	117.42		

NOTES:

1. For concrete seat, hinge block, creep block and elastomeric bearing pad details see sht. # TD3
2. For top concrete seat El. @ girder ℄ bearing see Sht. # TD2 .

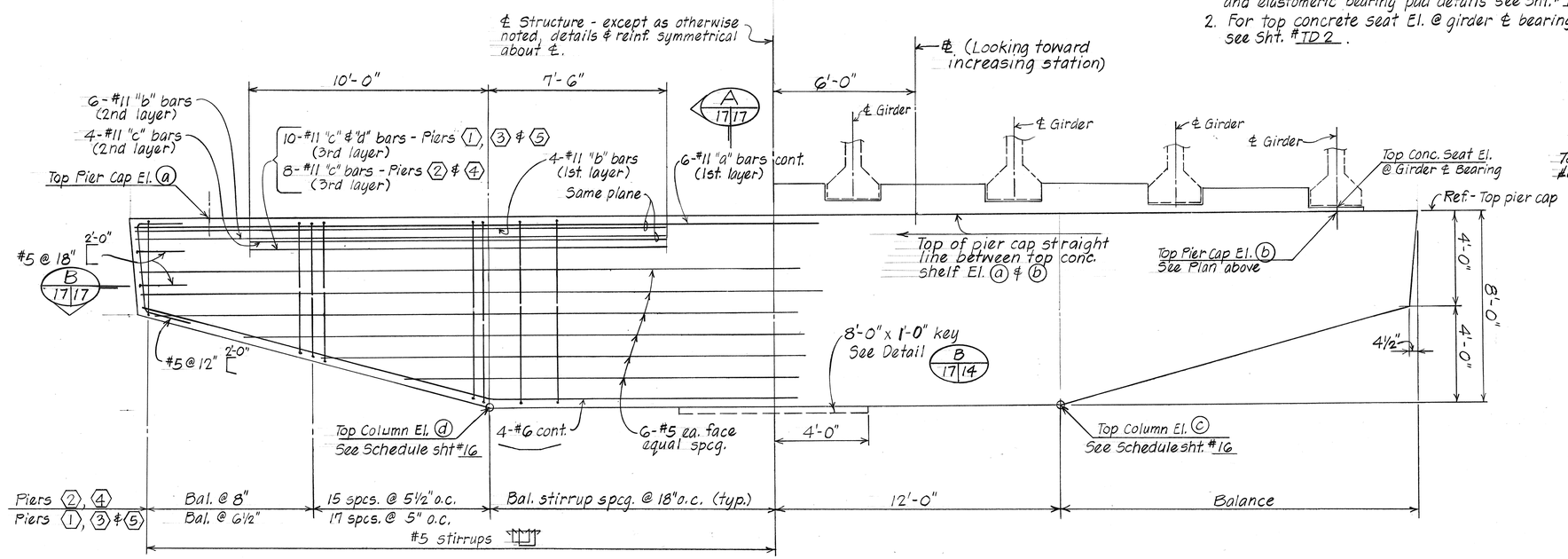

PIER REINFORCEMENT

PIER DIMENSIONS

TYPICAL PIER CAP ELEVATION

Scale: 3/8" = 1'-0"

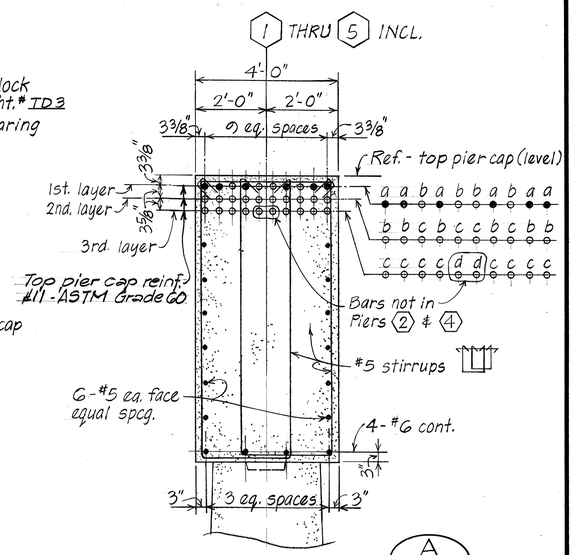

TYPICAL SECTION A 17|17

Scale: ½" = 1'-0"

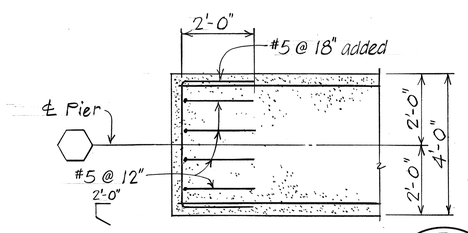

TYPICAL SECTION B 17|17

Scale: ½" = 1'-0"

ORIGINAL PLAN		DATE
	SURVEY PLOTTED BY	
	DRAWN BY	2/84
	TRACED BY	"
NOTE BOOK	DESIGNED BY	N.Y.
	QUANTITIES BY	D.C.O.
No.	CHECKED BY	2/84
		D.C.O.

STATE OF HAWAII
DEPARTMENT OF TRANSPORTATION
LAND TRANSPORTATION FACILITIES DIVISION

HONOKAHUA STREAM BRIDGE

TYPICAL PIER CAP DETAILS

HONOAPIILANI HIGHWAY
Pineapple Hill to Honokahua Bay
Proj. No. F-030-1(18)

Scale: As Noted Date: Apr. 1984

SHEET No. 17 OF 22 SHEETS

FED. ROAD DIST. NO.	STATE	FED. AID PROJ. NO.	FISCAL YEAR	SHEET NO.	TOTAL SHEETS
HAWAII	HAW.	F-030-1(18)	1984	105	169

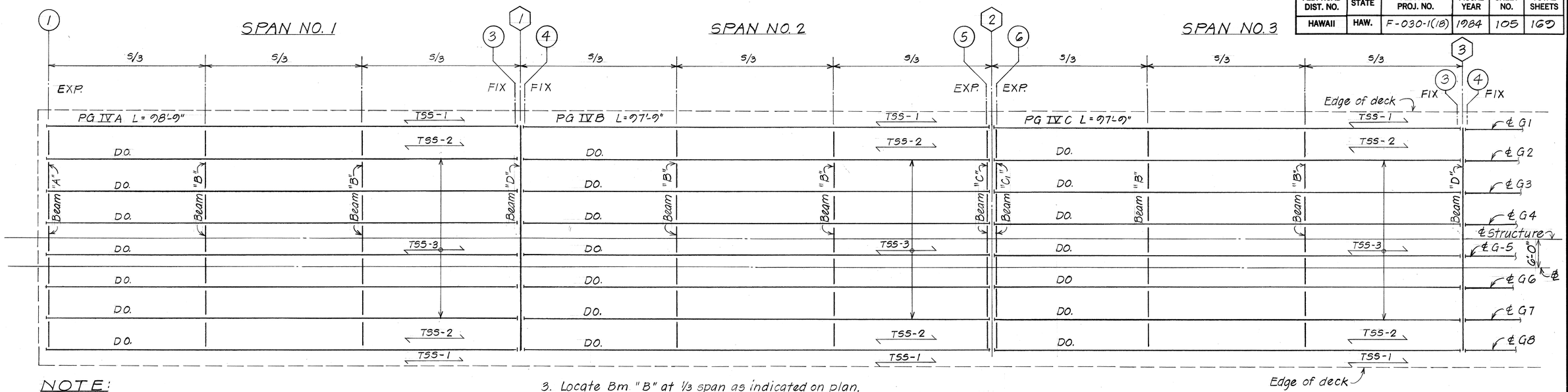

NOTE:

TSS-

1. Denotes extent of Top Slab Strip (TSS-), between girders each bay. Refer to Typ. Deck Slab Section & corresponding Bar Placement Diagram for size & nos. sht. # 19.
2. For additional notes see sht. # 19
3. Locate Bm. "B" at 1/3 span as indicated on plan.
4. Girder dimension L= horizontal measurement between girder & bearing each end. The contractor shall determine total length of girder.

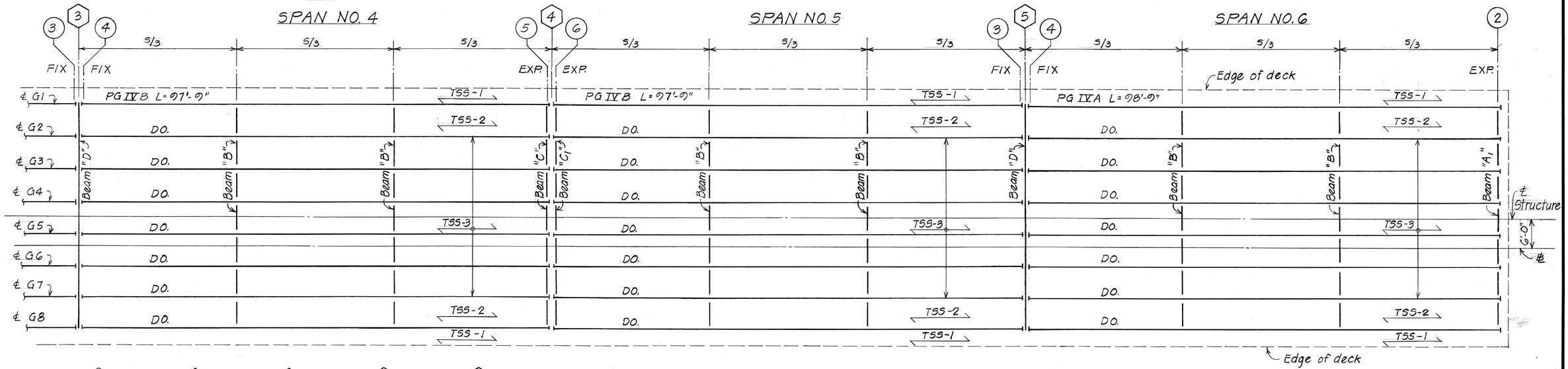

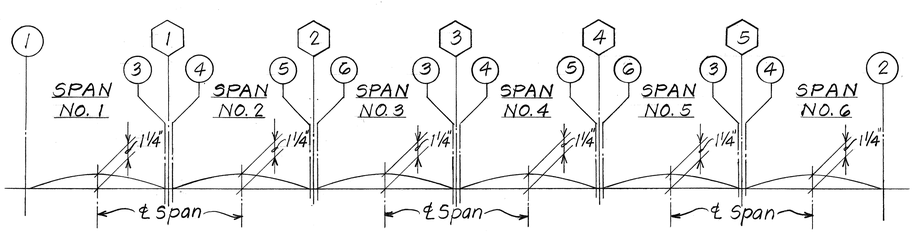

SLAB CAMBER DIAGRAM

DECK FRAMING PLAN

Scale: 1" = 20'-0"

STATE OF HAWAII
DEPARTMENT OF TRANSPORTATION
LAND TRANSPORTATION FACILITIES DIVISION

HONOKAHUA STREAM BRIDGE

DECK FRAMING PLAN
SLAB CAMBER DIAGRAM

HONOAPIILANI HIGHWAY
Pineapple Hill to Honokahua Bay
Proj. No. F-030-1(18)

Scale: As Noted — Date: Apr. 1984

SHEET No. 18 OF 22 SHEETS

ORIGINAL PLAN		DATE 3/84
	SURVEY PLOTTED BY	" " "
	DRAWN BY LMA	" " 2/84
NOTE BOOK	TRACED BY	
	DESIGNED BY RCG	
No.	QUANTITIES BY	
	CHECKED BY	

FED. ROAD DIST. NO.	STATE	FED. AID PROJ. NO.	FISCAL YEAR	SHEET NO.	TOTAL SHEETS
HAWAII	HAW.	F-030-1(18)	1984	106	169

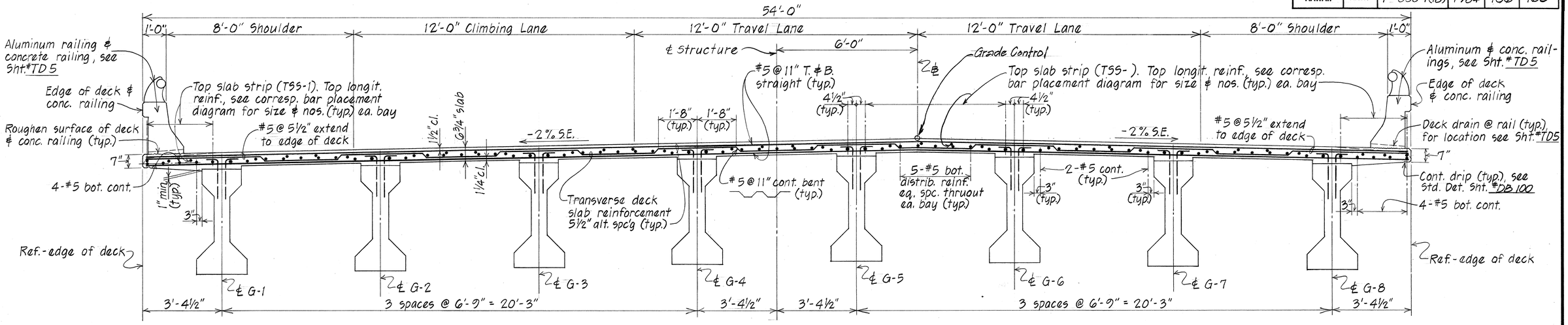

NORMAL DECK SECTION

Scale: ½" = 1'-0"

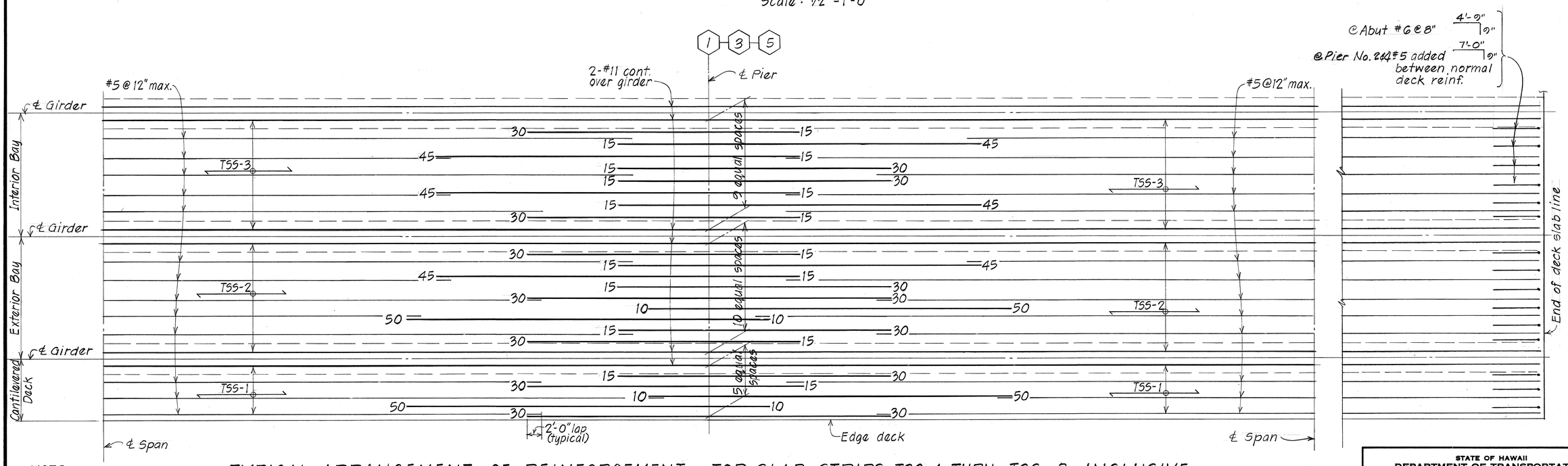

TYPICAL ARRANGEMENT OF REINFORCEMENT - TOP SLAB STRIPS TSS-1 THRU TSS-3 INCLUSIVE

Scale - Vertical: 3/8" = 1'-0", Horizontal: 1/8" = 1'-0"

NOTE:

1. All reinforcement #11 except as noted otherwise.
2. Number at end of bars denotes dimension in feet from the adjacent pier line numeral.
3. For additional slab reinforcement see Normal Section and corresponding details.
4. All #5 @ 12" bars shall be extended and lapped 2'-0" min. with the adjacent #11 bars as shown.

ORIGINAL PLAN	SURVEY PLOTTED BY	DATE 2/84
	DRAWN BY	" "
	TRACED BY	GU
NOTE BOOK	DESIGNED BY	CCC
	QUANTITIES BY	" "
No.	CHECKED BY	" "

STATE OF HAWAII
DEPARTMENT OF TRANSPORTATION
LAND TRANSPORTATION FACILITIES DIVISION

HONOKAHUA STREAM BRIDGE

NORMAL DECK SECTION
DECK REINF. DIAGRAM TSS-1 THRU TSS-3

HONOAPIILANI HIGHWAY
Pineapple Hill to Honokahua Bay
Proj. No. F-030-1(18)

Scale: As Noted Date: Apr. 1984

SHEET No. 19 OF 22 SHEETS

FED. ROAD DIST. NO.	STATE	FED. AID PROJ. NO.	FISCAL YEAR	SHEET NO.	TOTAL SHEETS
HAWAII	HAW.	F-030-1(18)	1984	107	163

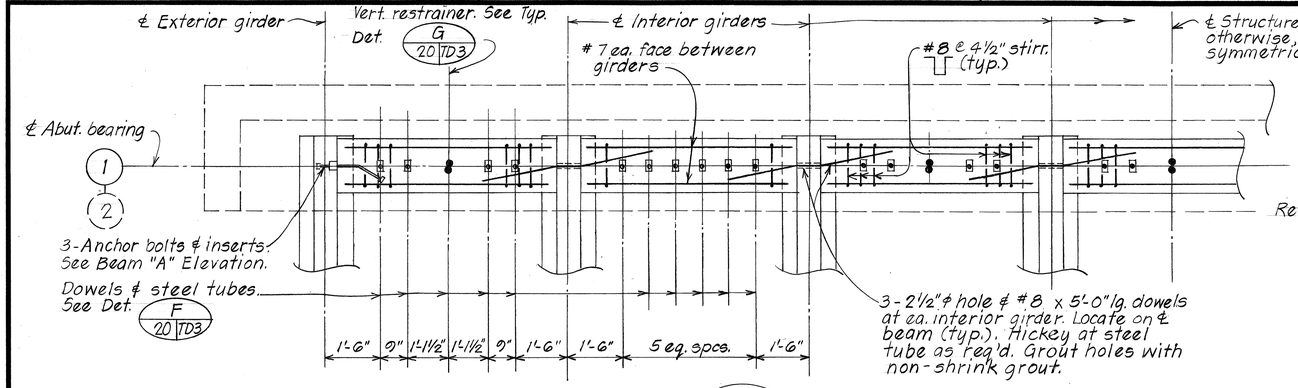

SECTION X 20|20

Scale: ½" = 1'-0"

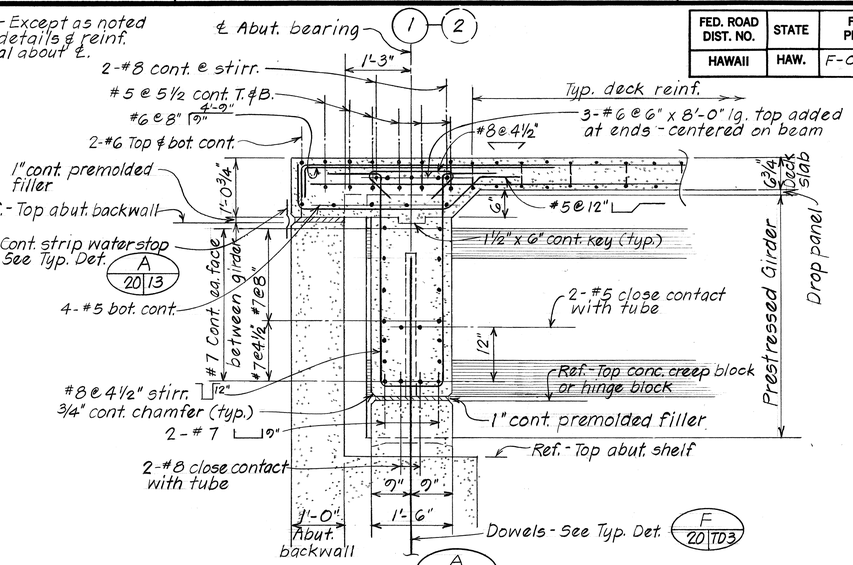

TYPICAL SECTION A 20|20

Scale: ¾" = 1'-0"

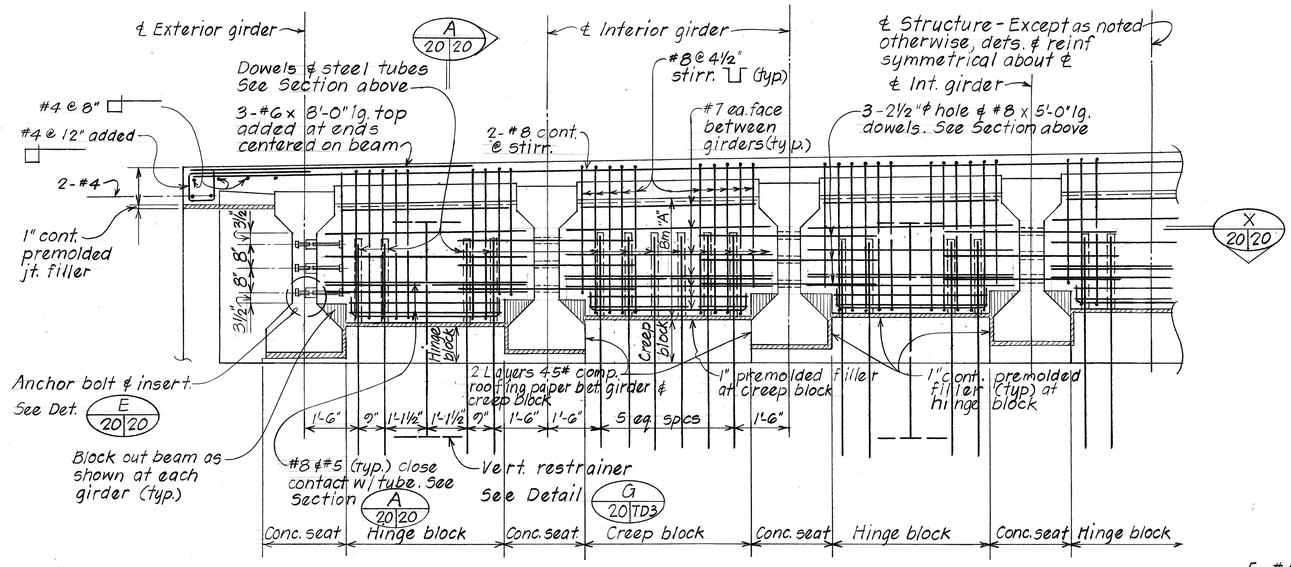

PART ELEVATION - BEAM "A" AS SHOWN

BM "A₁" SIMILAR EXCEPT OTHERWISE NOTED

Scale: ½" = 1'-0"

NOTE: Inserts & anchor bolts to be incidental to concrete.

TYPICAL INSERT DETAIL E 20|20

Scale: 3" = 1'-0"

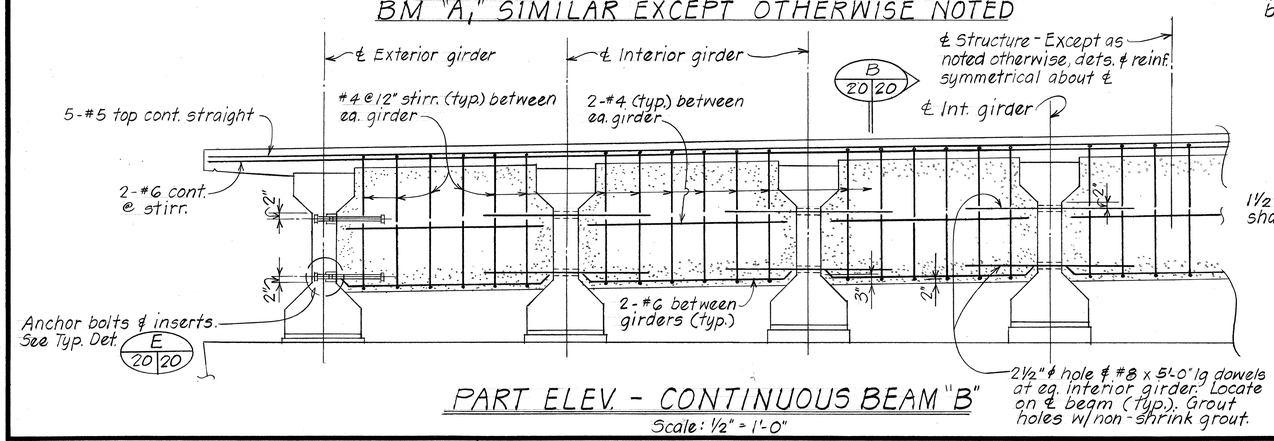

PART ELEV. - CONTINUOUS BEAM "B"

Scale: ½" = 1'-0"

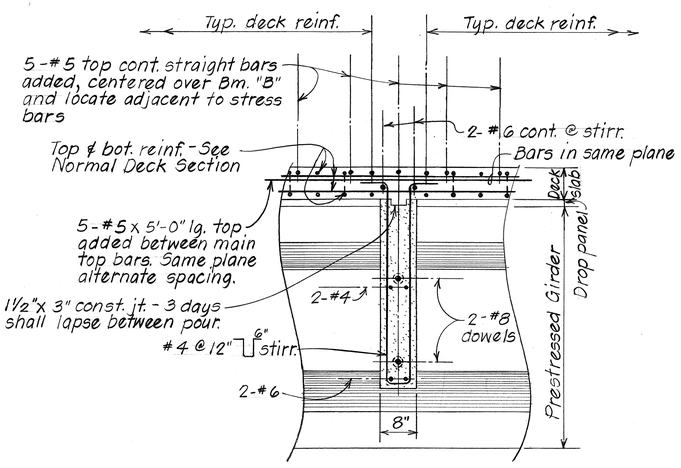

SECTION B 20|20

Scale: ¾" = 1'-0"

SURVEY PLOTTED BY	DATE 3/84
DRAWN BY LMA	" "
TRACED BY LMA	" 3/84
DESIGNED BY OCO	" "
QUANTITIES BY	" "
CHECKED BY	" "

ORIGINAL PLAN — NOTE BOOK No.

STATE OF HAWAII
DEPARTMENT OF TRANSPORTATION
LAND TRANSPORTATION FACILITIES DIVISION

HONOKAHUA STREAM BRIDGE

BEAM "A" & BEAM "B" DETAILS

HONOAPIILANI HIGHWAY
Pineapple Hill to Honokahua Bay
Proj. No. F-030-1(18)

Scale: As Noted — Date: Apr. 1984

SHEET No. 20 OF 22 SHEETS

21

FED. ROAD DIST. NO.	STATE	FED. AID PROJ. NO.	FISCAL YEAR	SHEET NO.	TOTAL SHEETS
HAWAII	HAW.	F-030-1(18)	1984	108	169

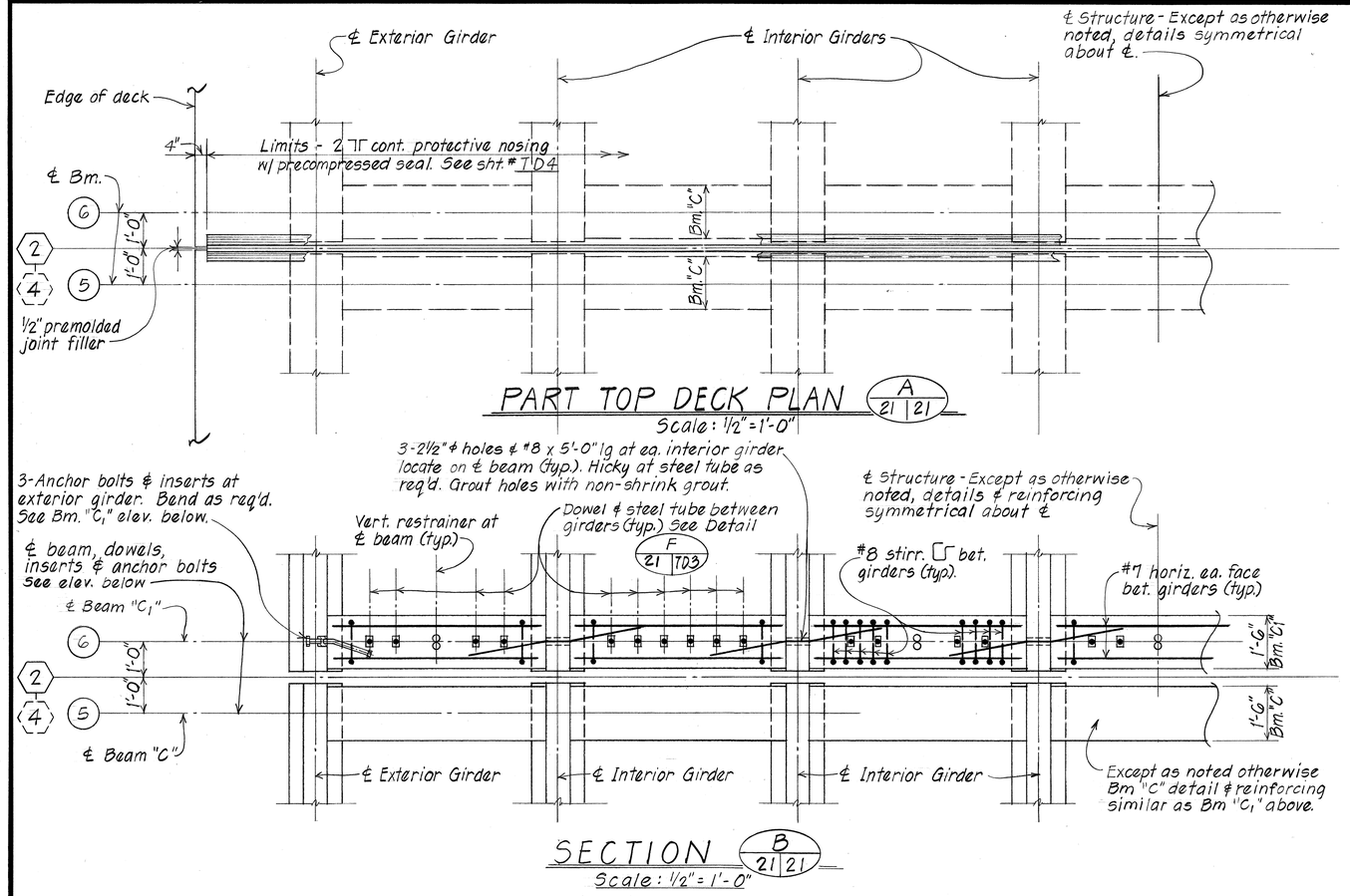

PART TOP DECK PLAN (A 21 21)

Scale: 1/2" = 1'-0"

SECTION (B 21 21)

Scale: 1/2" = 1'-0"

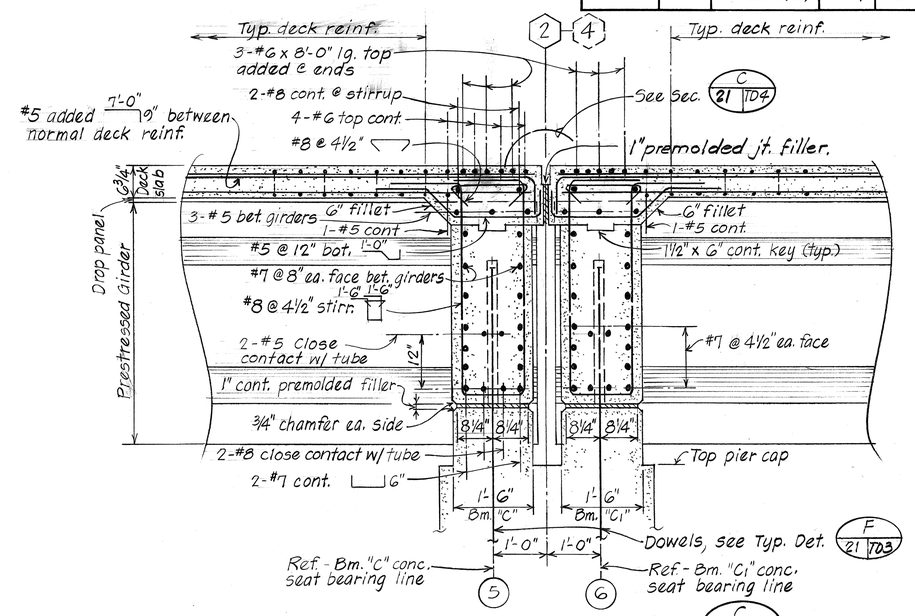

TYPICAL SECTION (C 21 21)

Scale: 3/4" = 1'-0"

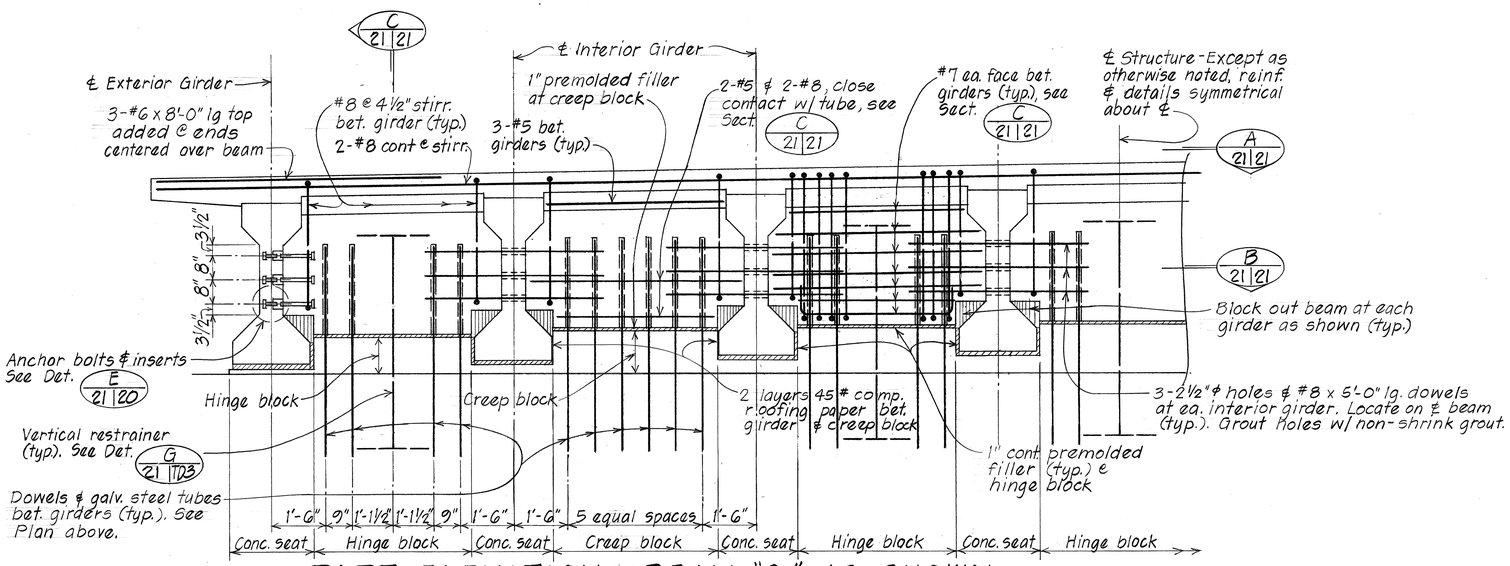

PART ELEVATION - BEAM "C1" AS SHOWN Scale: 1/2" = 1'-0"

(BEAM "C" SIMILAR EXCEPT AS OTHERWISE NOTED)

SURVEY PLOTTED BY		DATE 3/84
DRAWN BY	G.L.M.	" "
TRACED BY	G.L.M.	" 3/84
DESIGNED BY	R.C.O.	" "
QUANTITIES BY		" "
CHECKED BY		

ORIGINAL PLAN

NOTE BOOK

No.

STATE OF HAWAII
DEPARTMENT OF TRANSPORTATION
LAND TRANSPORTATION FACILITIES DIVISION

HONOKAHUA STREAM BRIDGE

BEAM "C" & "C1" DETAILS

HONOAPIILANI HIGHWAY
Pineapple Hill to Honokahua Bay
Proj. No. F-030-1(18)

Scale: As Noted Date: Apr. 1984

SHEET No. 21 OF 22 SHEETS

FED. ROAD DIST. NO.	STATE	FED. AID PROJ. NO.	FISCAL YEAR	SHEET NO.	TOTAL SHEETS
HAWAII	HAW.	F-030-1(18)	1984	109	169

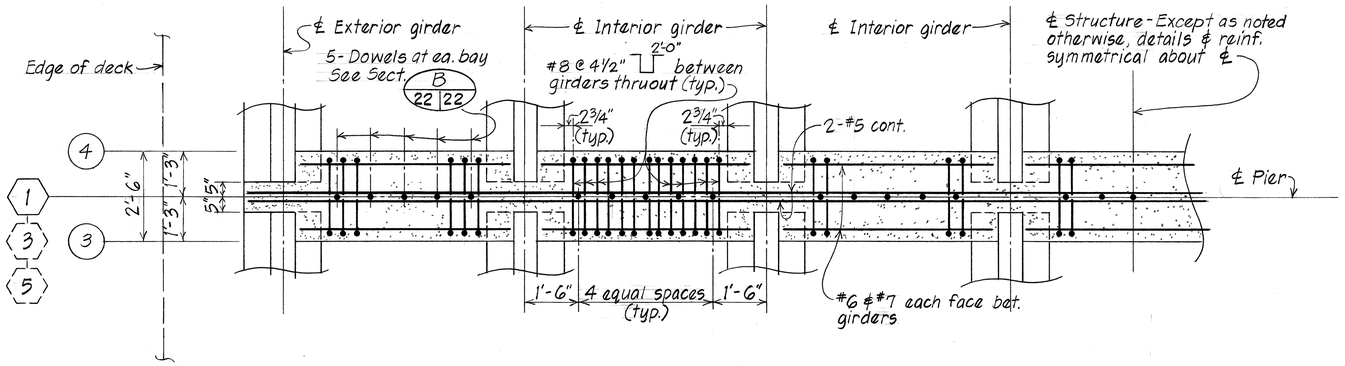

SECTION A 22|22
Scale: 1/2" = 1'-0"

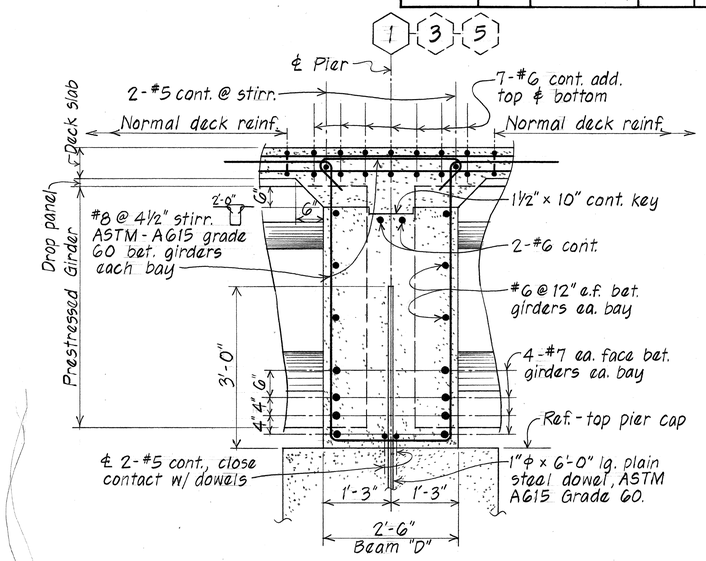

SECTION B 22|22
Scale: 3/4" = 1'-0"

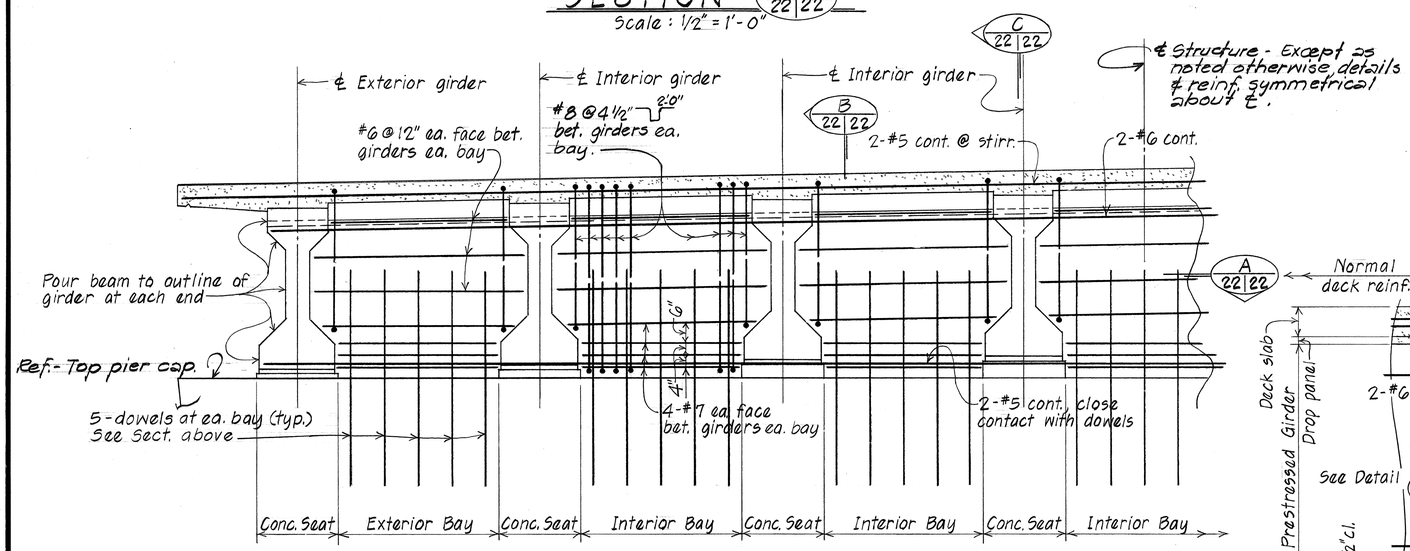

PART ELEVATION - BEAM "D"
Scale: 1/2" = 1'-0"

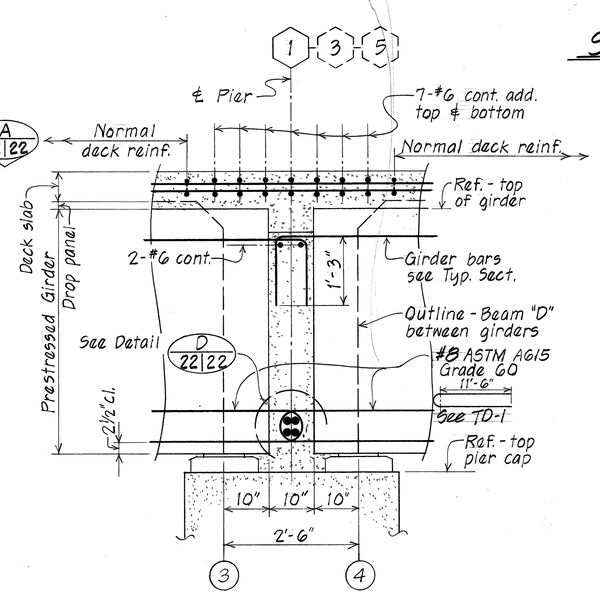

SECTION C 22|22
Scale: 3/4" = 1'-0"

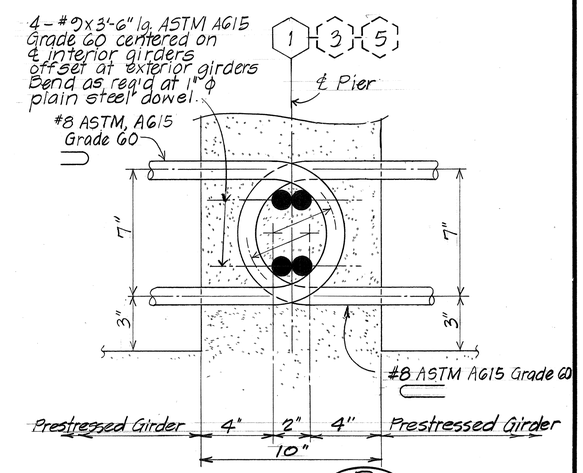

DETAIL D 22|22
Scale: 3" = 1'-0"

ORIGINAL PLAN	SURVEY PLOTTED BY	DATE 3/84
	DRAWN BY G.U.	3/84
	TRACED BY G.U.	3/84
NOTE BOOK	DESIGNED BY D.C.O.	3/84
	QUANTITIES BY	
No.	CHECKED BY	

STATE OF HAWAII
DEPARTMENT OF TRANSPORTATION
LAND TRANSPORTATION FACILITIES DIVISION

HONOKAHUA STREAM BRIDGE

BEAM "D" DETAILS

HONOAPIILANI HIGHWAY
Pineapple Hill to Honokahua Bay
Proj. No. F-030-1(18)

Scale: As Noted Date: Apr. 1984

SHEET No. 22 OF 22 SHEETS