FED. ROAD DIST. NO.	STATE	FED. AID PROJ. NO.	FISCAL YEAR	SHEET NO.	TOTAL SHEETS
HAWAII	HAW.	[illegible]	1946	[illegible]	[illegible]

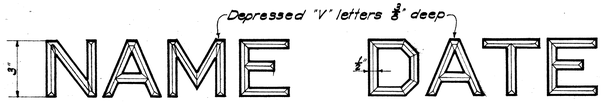

DETAIL OF LETTERS AND FIGURES AT BOTH APPROACHES

NOTE! *Name of stream to be placed in left end post panels and date in right end post panels on entering bridge using modified block letters 3" in height.*

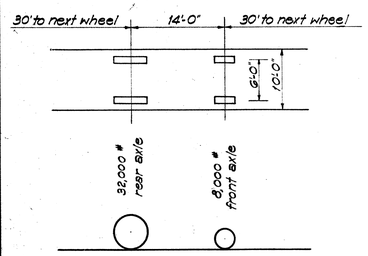

DIAGRAM OF TYPICAL 20-TON TRUCK

(TRUCK & LOADING)

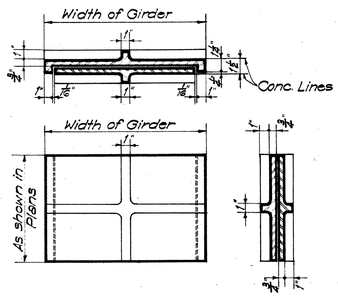

EXPANSION PLATES

Scale: 1½" = 1'-0"

NOTE! *Plates to be of Phosphor Bronze conforming to A.S.T.M., B 22, Class C. Contact areas to have medium planed finish with finishing strokes parallel to longitudinal direction of bridge*

GENERAL NOTES

DEAD LOAD: *Concrete Paving = 150# per cu. ft.*
LIVE LOAD: *H-20 loading; Impact, $\frac{50}{L+125}$ Max. 30 %*

DESIGN STRESSES: *f_c = 1000# per sq. in.; f_s = 18000# per sq. in.*

CONCRETE: *Class of concrete to be used in different parts of the structure are as noted on the plans. All exposed edges chamfered 3/4" unless otherwise noted.*

REINFORCING STEEL: *Intermediate grade. All steel to be round or square deformed bars of approved design. All dimensions relating to reinforcing are to centers of bars unless otherwise noted.*

Splicing of reinforcing other than main deck slab, girder and frame bars shall be done by lapping 40 diameters. Splices are to be staggered. Splices in main girder and frame bars are permitted only in bars exceeding 30'-0" in length at points to be indicated by the Engineer. These splices to be electrically arc welded according to detail and specifications. No allowance will be made in the quantities for extra weight of steel required for splices not shown on the plans.

Minimum spacing between parallel bars shall be 2½" times the diameter of round or 3 times the side dimension of square bars, but in no case shall the clear distance between the bars be less than 1⅓ times the maximum size of the coarse aggregate.

Minimum covering, measured from the surface of the concrete to the face of any reinforcing bar, shall be not less than 2 inches except in slabs where the minimum covering shall be 1 inch. In the footings of abutments and retaining walls and in piers the minimum covering shall be 3 inches. In work exposed to the action of sea water the minimum covering shall be 4 inches except in precast concrete piles, where a minimum of 3 inches may be used.

WATERPROOFING: *Apply waterproofing as specified in Section 34 Pamphlet N of the Specification, and as shown in the plans. Waterproofing is incidental to the concrete and will not be paid for separately.*

CONSTRUCTION JOINTS: *All construction joints to have surface roughened and 1:2 cement grout applied immediately before the second pour. Construction joints to be located at places indicated in the plans.*

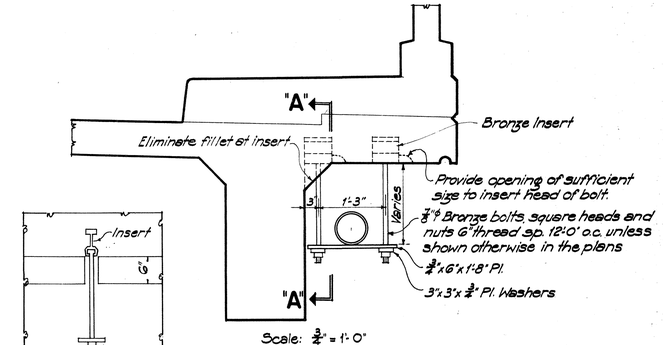

SECTION "A-A"

Scale: 3/4" = 1'-0"

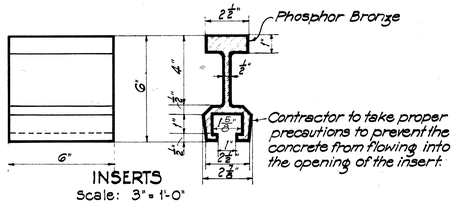

INSERTS

Scale: 3" = 1'-0"

DETAIL OF PIPE HANGERS AND INSERTS

NOTE! *Inserts, bolts, plates, nuts & washers to be Phosphor Bronze conforming to the A.S.T.M. standards, Serial Designation B 22 or the latest revision thereof, and shall be Class "D" grade.*

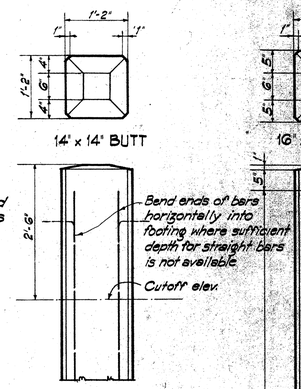

PILE CUTOFF

Scale: 3/4" = 1'-0"

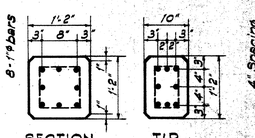

14" x 14" CONCRETE PILE

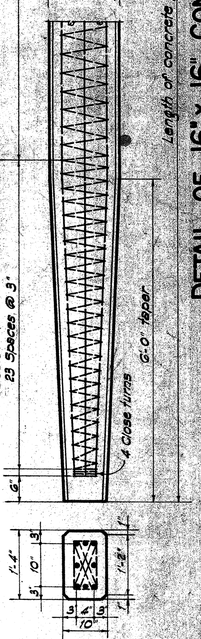

DETAIL OF 16" x 16" CONCRETE PILE

NOTE! *For 14"x14" Concrete Piles use same reinforcing, # of bars & wrapping*

Scale: 3/4" = 1'-0"

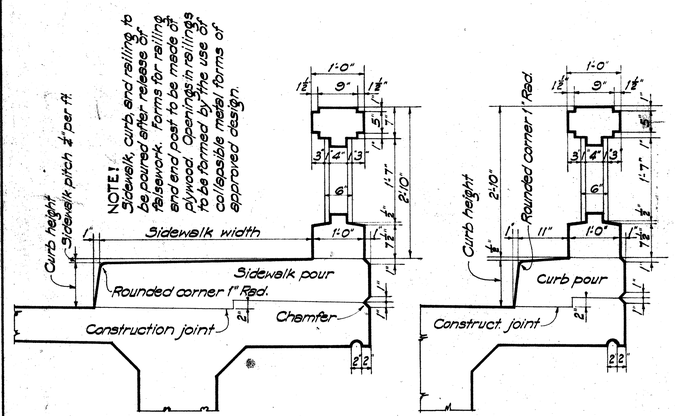

BRIDGES WITH SIDEWALK

BRIDGES WITHOUT SIDEWALK

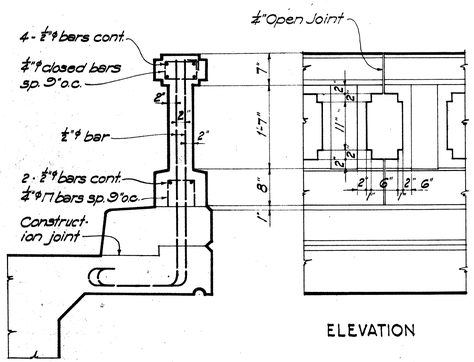

RAILING REINFORCING

RAILING DETAILS

Scale: 3/4" = 1'-0"

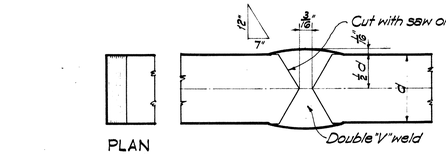

REINFORCING BAR SPLICE

Scale: Actual Size

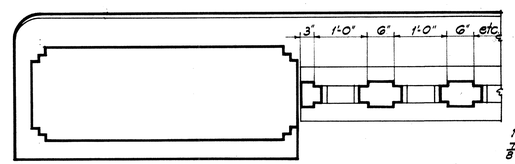

SECTION "B-B"

Scale: 3/4" = 1'-0"

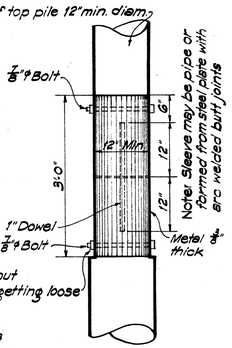

TIMBER PILE SPLICE

Scale: 3/4" = 1'-0"

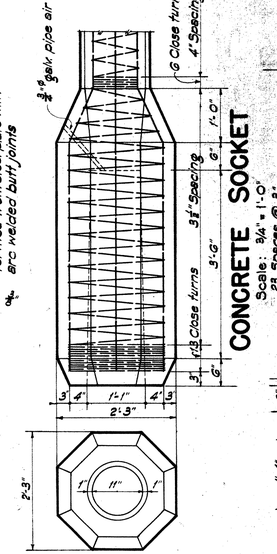

CONCRETE SOCKET

Scale: 3/4" = 1'-0"
23 Spaces @ 3"

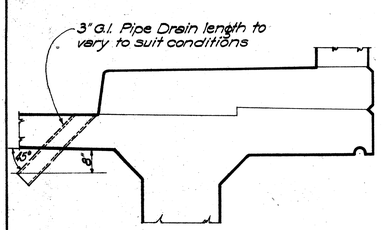

SIDEWALK SIDE

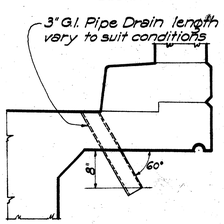

NORMAL SIDE

DRAINAGE DETAIL

Scale: 3/4" = 1'-0"

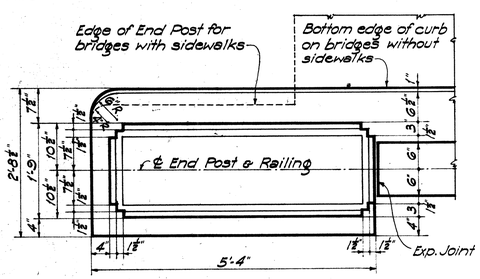

END POST DETAIL

Scale: 3/4" = 1'-0"

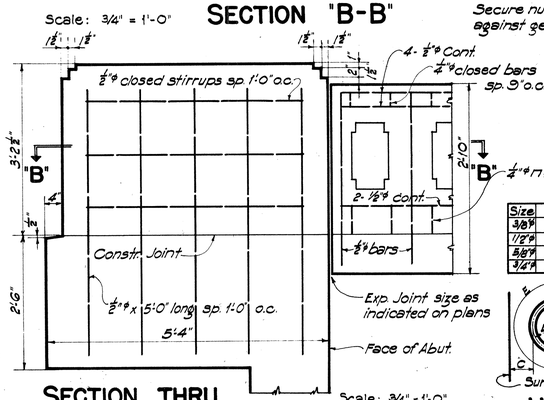

SECTION THRU ℄ OF END POST AND RAILING

Scale: 3/4" = 1'-0"

Size	C	E	Size	C	E
3/8"φ	2"	6"	7/8"φ	2½"	1'-3"
1/2"φ	2"	8"	1"φ	3"	1'-5"
5/8"φ	2½"	11"	1⅛"φ	3"	1'-7"
3/4"φ	2½"	1'-1"	1¼"φ	3"	1'-9"

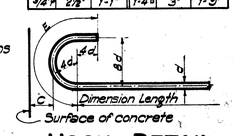

HOOK DETAIL

TERRITORIAL HIGHWAY DEPARTMENT
TERRITORY OF HAWAII

STANDARD BRIDGE DETAILS

Scales as Noted

APPROVED BY: _____
TERRITORIAL HIGHWAY ENGINEER

SHEET No. OF SHEETS

ORIGINAL PLANS	SURVEY PLOTTED BY	DATE
	DESIGNED BY	
	DRAWN BY	R.Y. Oishi
	TRACED BY	R.Y. Oishi
NOTE BOOK	QUANTITIES BY	" "
	QUANTITIES CHECKED BY	" "
No.	CHECKED BY	" "

July 1946

5191.7