FED. ROAD DIST. NO.	STATE	FED. AID PROJ. NO.	FISCAL YEAR	SHEET NO.	TOTAL SHEETS
MAUI	HAW.	ER-16(009)	2012	8	13

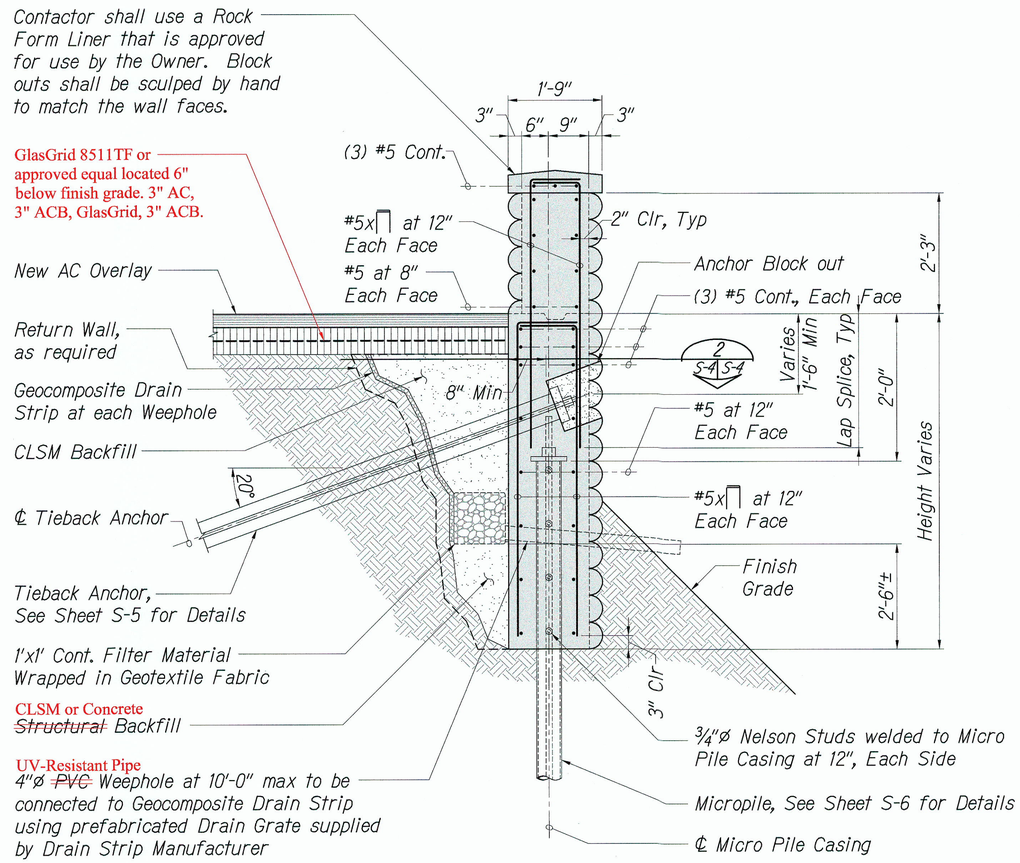

TIEBACK WALL SECTION (1 / S-3 | S-4)

Scale: 3/4" = 1'-0"

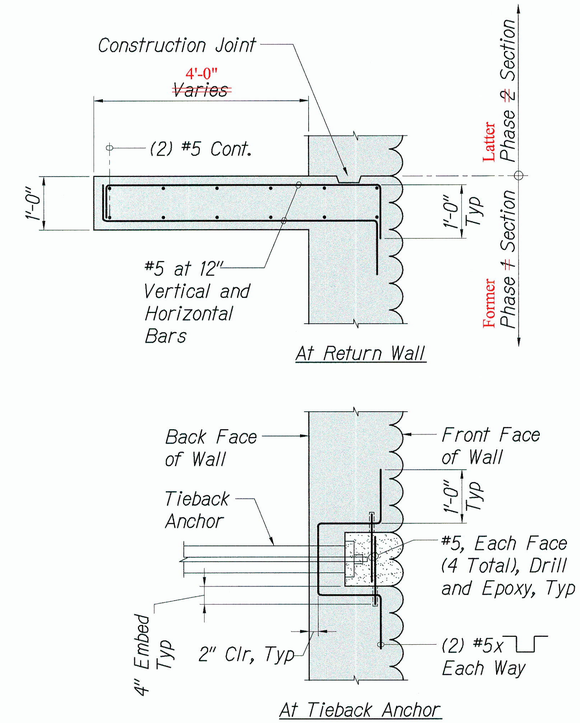

SECTION (2 / S-4 | S-4)

Scale: 3/4" = 1'-0"

LEGEND FOR AS-BUILT POSTINGS	
~~	Squiggly line for as-built deletion
~~100.00~~	Double line for as-built deletion
Roadway	Text for as-built posting

ORIGINAL PLAN	SURVEY PLOTTED BY	DATE
NOTE BOOK	TRANS TYPED BY R. Tamashiro	6/30/06
	TRACED BY "	"
	DESIGNED BY L. Chan	"
	QUANTITIES BY L. Chan	"
No.	CHECKED BY L. Chan	"

PW:/(USNAD 27)3901-3950/3945 DIT - Hana Highway Emergency Repairs\004 Drawings\Structural\AutoCAD_Series\DIT1HUBA3P3 3D-BUILT\S-04.dwg PLOT DATE: 29-10-2014 @ 04:29 pm

LICENSED PROFESSIONAL ENGINEER No. 6818-S KEN KAZUO HAYASHIDA HAWAII, U.S.A.

EXPIRATION DATE OF THE LICENSE 4/30/2014
THIS WORK WAS PREPARED BY ME OR UNDER MY SUPERVISION.

STATE OF HAWAII
DEPARTMENT OF TRANSPORTATION
HIGHWAYS DIVISION

TIEBACK WALL SECTIONS

HANA HIGHWAY EMERGENCY REPAIRS
MILEPOST 14.0
FEDERAL AID PROJECT No. ER-16(009)

Scale: As Noted Date: June 2012

SHEET No. S-4 OF 6 SHEETS

"AS-BUILT"