FED. ROAD DIST. NO.	STATE	FED. AID PROJ. NO.	FISCAL YEAR	SHEET NO.	TOTAL SHEETS
HAWAII	HAW	DA-NC-8(1)	1943		

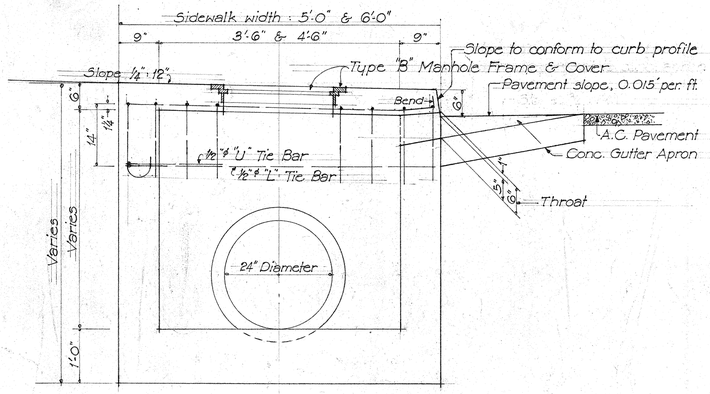

SECTION

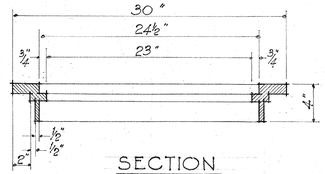

SECTION

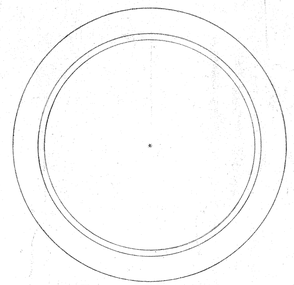

PLAN OF RIM

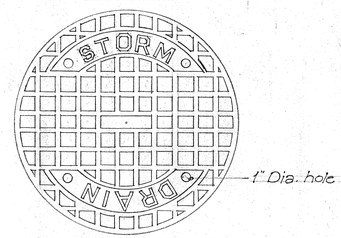

PLAN OF COVER

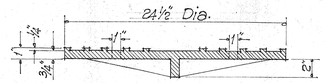

SECTION

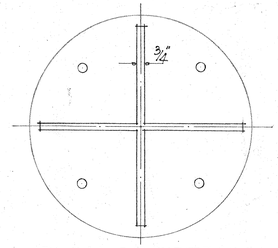

PLAN OF BOTTOM

TYPE "B"
STANDARD CATCHBASIN CASTINGS

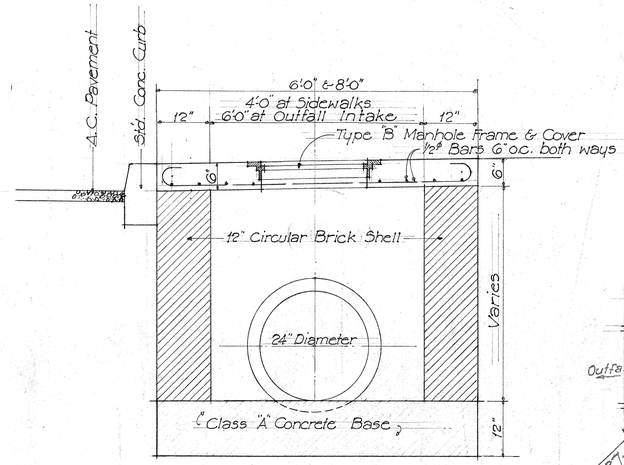

SECTION

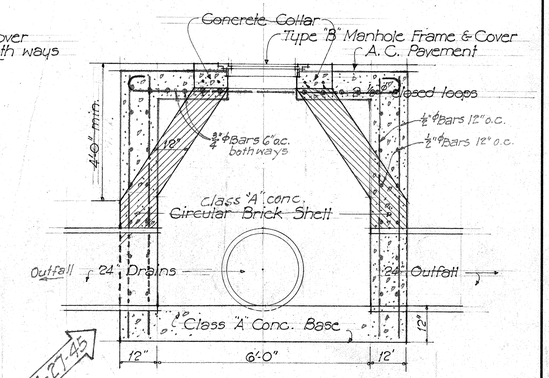

REV. 4-27-49

MANHOLE AT OUTFALL
Scale: 1/2" = 1'-0"

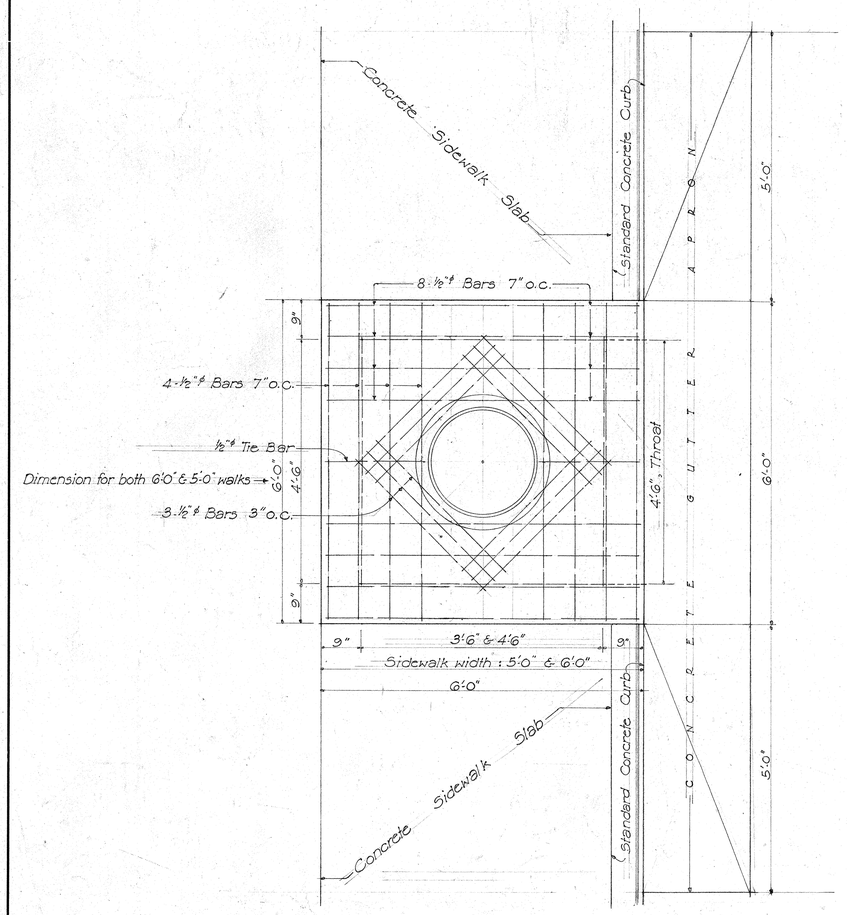

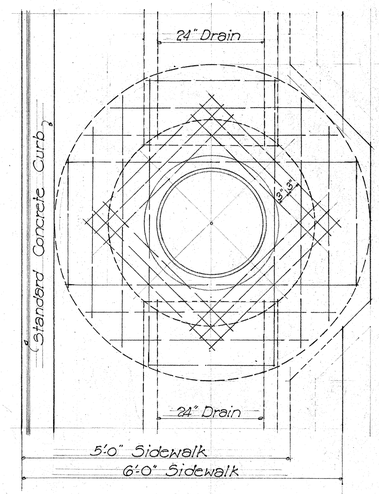

PLAN

S'T'D. MANHOLE
Scale: 3/4" = 1'-0"

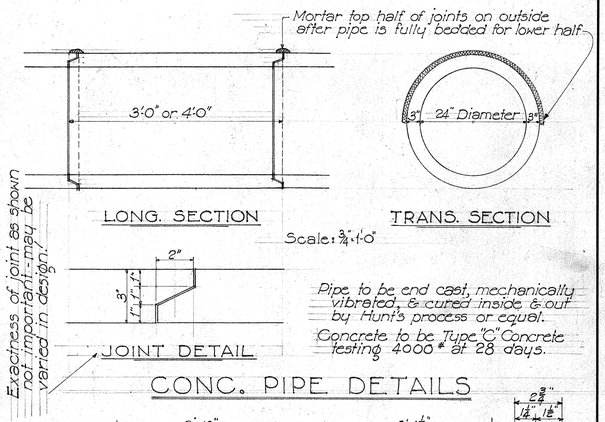

LONG. SECTION
TRANS. SECTION
Scale: 3/4" = 1'-0"
JOINT DETAIL
CONC. PIPE DETAILS

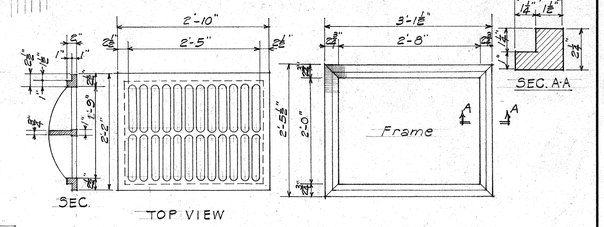

STANDARD C.I. FRAME & GRATE "C"
Scale 1/2" = 1'-0"
Note! Stock Pattern from Novelty Foundary

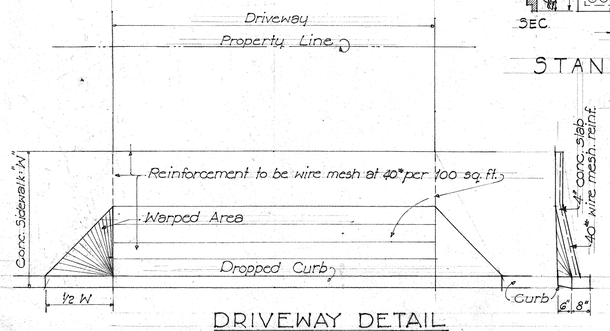

DRIVEWAY DETAIL
Scale: 3/8" = 1'-0"

ORIGINAL PLAN		DATE
	SURVEY PLOTTED BY	
	DESIGNED BY	
	DRAWN BY	
	TRACED BY	
NOTE BOOK	QUANTITIES BY	
	QUANTITIES CHECKED BY	
No.	CHECKED BY	

TERRITORIAL HIGHWAY DEPARTMENT
TERRITORY OF HAWAII

STANDARD DETAILS
PROJECT Nº DA-NC-8(1)
Haleakala Road - Paia Spur
Scales as noted
May, 1944

SHEET Nº OF SHEETS
5119.15A

15A ~~11B~~