FED. ROAD DIST. NO.	STATE	FED. AID PROJ. NO.	FISCAL YEAR	SHEET NO.	TOTAL SHEETS
HAWAII	HAW.	M-3500(1)	1980	7	57

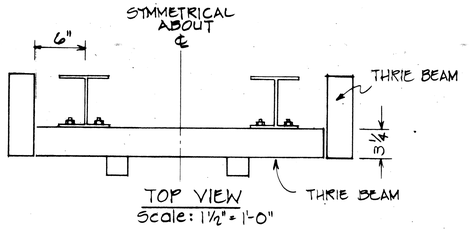

TOP VIEW
Scale: 1½" = 1'-0"

BACKUP WIDTH TABLE				
UNIT WIDTH	A	B	C	D
2'-0"	2'-0"	1'-11½"	0'-6"	2"
2'-6"	2'-6"	2'-5¼"	0'-9"	5"
3'-0"	3'-0"	2'-11¼"	1'-0"	8"

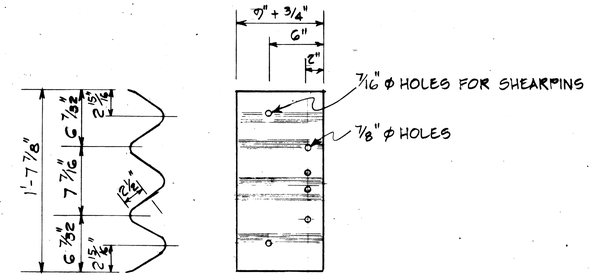

DETAIL OF THRIE BEAM
LEFT SIDE PANEL SHOWN
RIGHT SIDE OPPOSITE

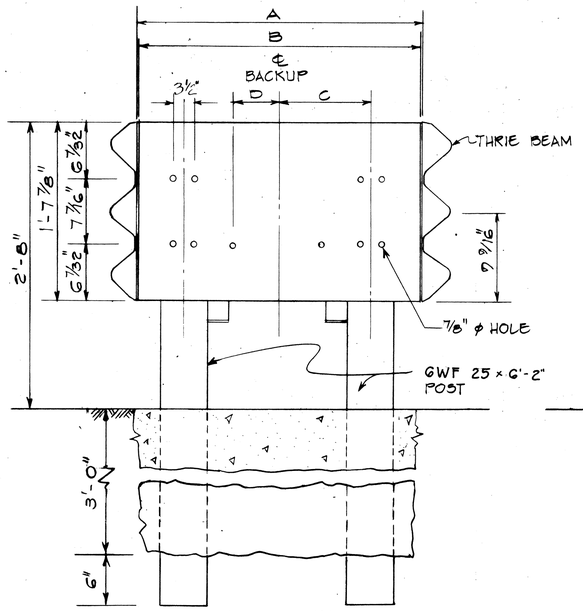

FRONT VIEW

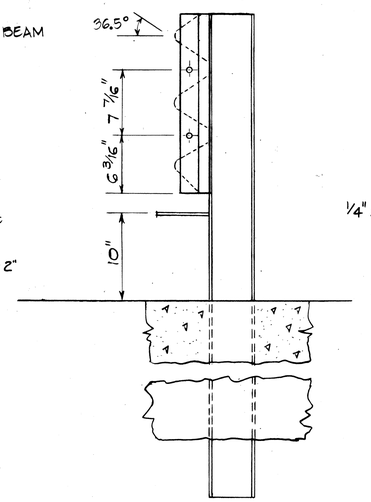

SIDE VIEW

WIDE FLANGE BACKUP
(FOR NARROW UNITS)
Scale: 1½" = 1'-0"

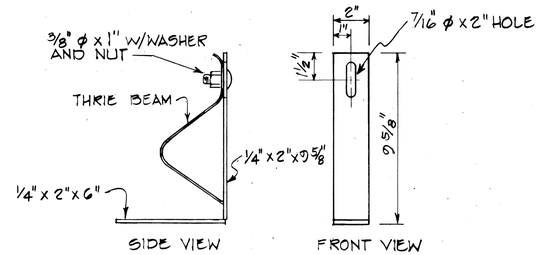

SIDE VIEW FRONT VIEW

CARTRIDGE CLIP DETAIL
Scale: 3" = 1'-0"

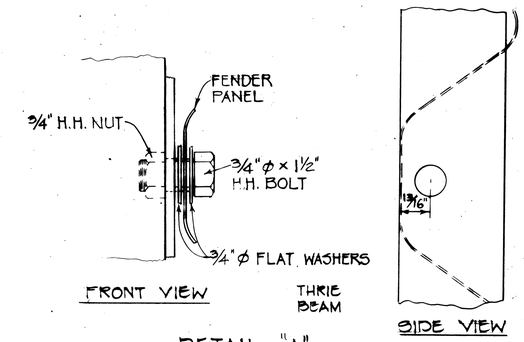

FRONT VIEW THRIE BEAM SIDE VIEW

DETAIL "A"
Scale: ½" = 1"

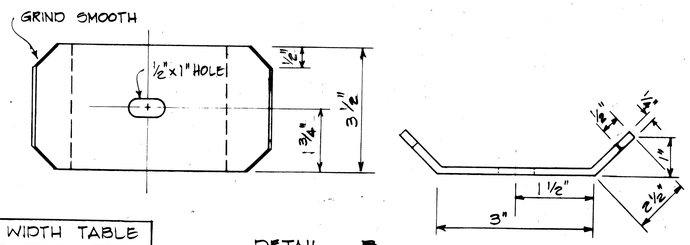

DETAIL B
Scale: 6" = 1'-0"

DIAPHRAM WIDTH TABLE			
MODEL NO	E	F	G
2002005	2'-0"	1'-0"	
2062063	2'-6"	1'-3"	5¾"
3003005	3'-0"	1'-6"	8¾"

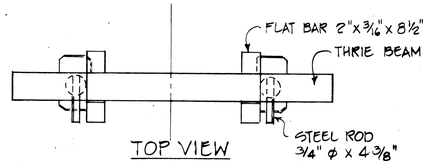

TOP VIEW

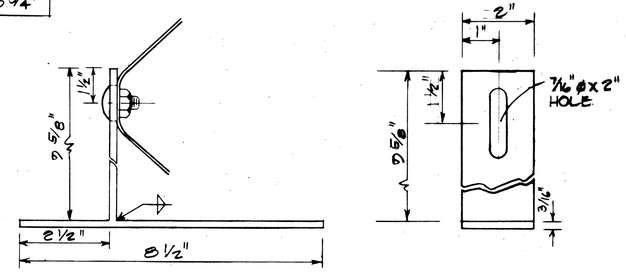

CARTRIDGE CLIP DETAIL
Scale: 6" = 1'-0"

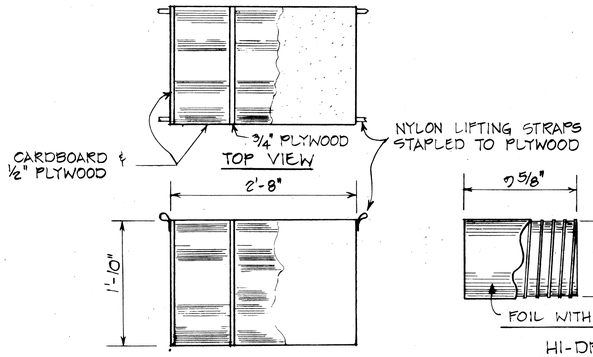

SIDE VIEW

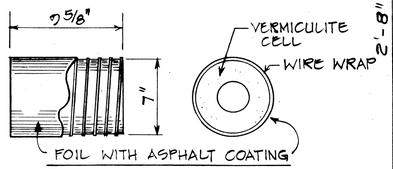

HI-DRI CELL

HI-DRI CARTRIDGE
Not to Scale

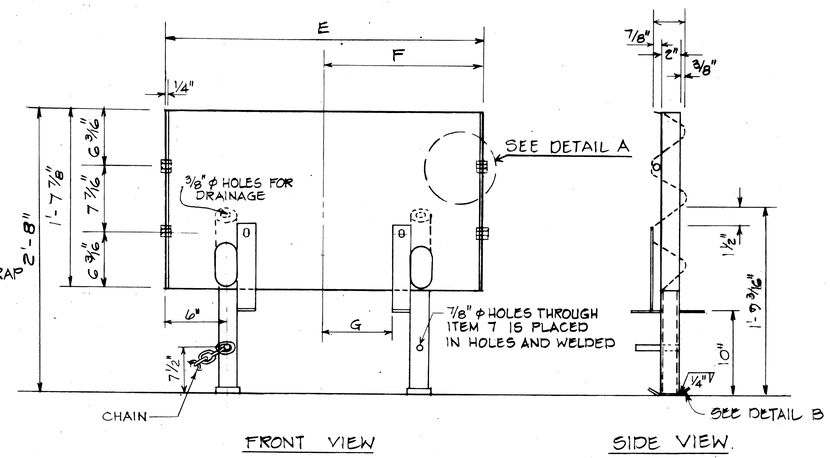

FRONT VIEW SIDE VIEW

THRIE BEAM DIAPHRAGM DETAILS
Scale: 1½" = 1'-0"

ORIGINAL PLAN	SURVEY PLOTTED BY	DATE
	DRAWN BY	
	TRACED BY	
NOTE BOOK	DESIGNED BY	
	QUANTITIES BY	
No.	CHECKED BY	

STATE OF HAWAII
DEPARTMENT OF TRANSPORTATION
LAND TRANSPORTATION FACILITIES DIVISION

DETAILS OF GUARD RAIL ENERGY ABSORBING TERMINAL

Scale: As Shown Date: 1978

SHEET No. 1 OF 8 SHEETS

FED. ROAD DIST. NO.	STATE	FED. AID PROJ. NO.	FISCAL YEAR	SHEET NO.	TOTAL SHEETS
HAWAII	HAW.	M-3500(1)	1980	8	57

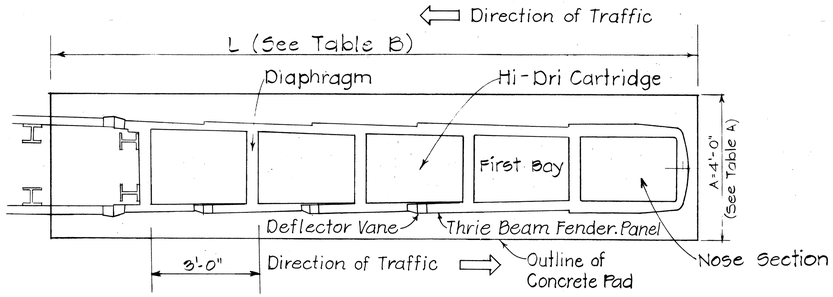

PLAN
Scale: 1/2"=1'-0"

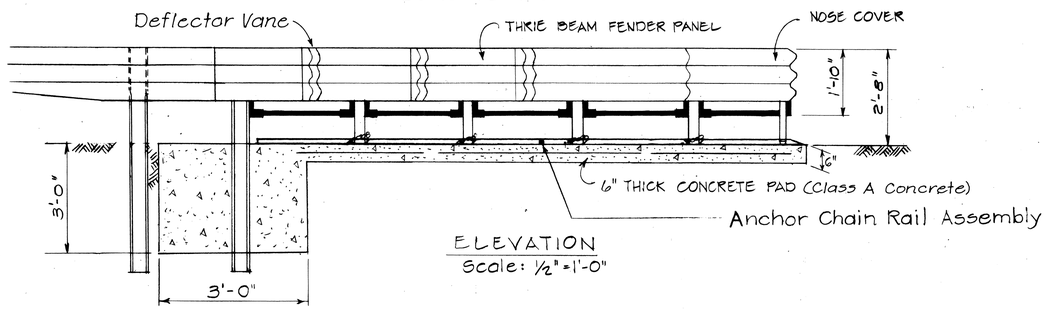

ELEVATION
Scale: 1/2"=1'-0"

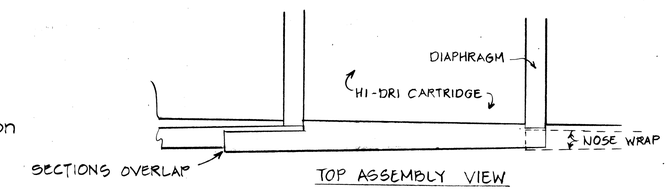

TOP ASSEMBLY VIEW

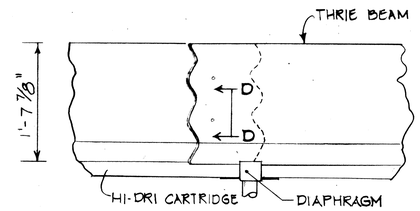

SIDE ASSEMBLY VIEW

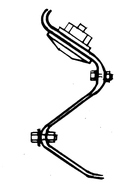

SECTION D-D

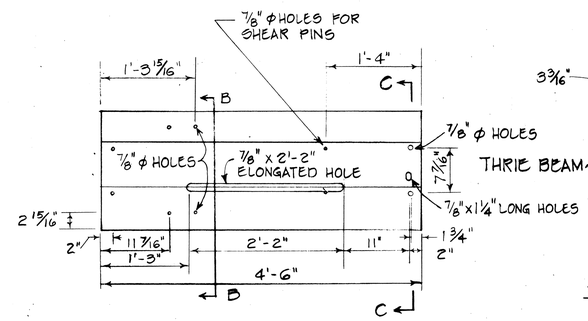

SIDE VIEW
Scale: 1"=1'-0"

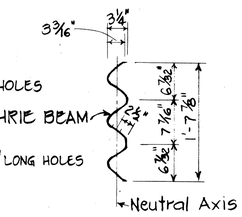

SECTION C-C

SECTION B-B

NOTE:

1. The Contractor shall verify with the manufacturer, any amendments or revisions thereof as may be made from time to time, shall be used in this project.
2. Constant longitudinal and transverse slope throughout Concrete Pad.
3. Concrete Pad cross slope shall not exceed 3%.
4. Outline of concrete pad shall match grades with surrounding median area.

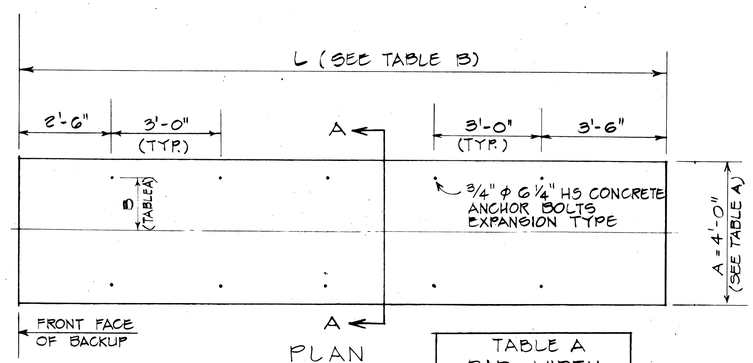

PLAN

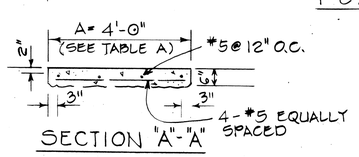

SECTION "A"-"A"

TABLE A PAD WIDTH		
MODEL NO.	A	B
200200	4'-0"	1'-0"
206206	4'-0"	1'-3"
300300	4'-0"	1'-6"

TABLE B PAD LENGTH		
NO. OF BATS	L	ANCHOR BOLTS QUAN.
4	15'-6"	14
5	18'-6"	16
6	21'-6"	20
7	24'-6"	22
8	27'-6"	24
9	30'-6"	26
10	33'-6"	30
3	12'-6"	12

CONCRETE PAD DETAILS
Scale: 1/2"=1'-0"

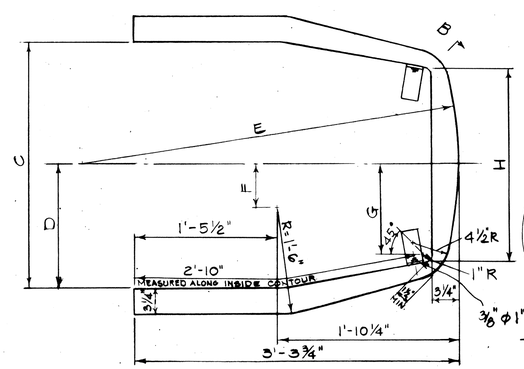

PLAN
N.T.S.

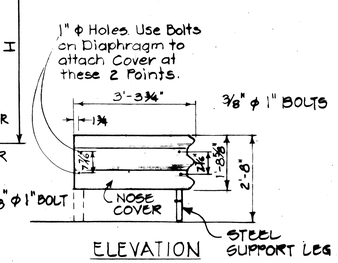

ELEVATION

TABLE C							
UNIT SIZE	ASST. NO	C	D	E	F	G	H
2'-0"	35-02-031	2'-0"	1'-0"	2'-1 3/8"	3 1/4"	8"	1'-6"
2'-6"	35-02-032	2'-6"	1'-3"	3'-10"	6 1/4"	11"	2'-0"
3'-0"	35-02-032	2'-6"	1'-3"	3'-10"	6 1/4"	11"	2'-0"

STATE OF HAWAII
DEPARTMENT OF TRANSPORTATION
LAND TRANSPORTATION-FACILITIES DIVISION

DETAILS OF GUARD RAIL ENERGY ABSORBING TERMINAL

Scale: As Shown Date: 1978

SHEET No. 2 OF 8 SHEETS

ORIGINAL PLAN	SURVEY PLOTTED BY	DATE
	DRAWN BY	
	TRACED BY	
NOTE BOOK	DESIGNED BY	
No.	QUANTITIES BY	
	CHECKED BY	

FED. ROAD DIST. NO.	STATE	FED. AID PROJ. NO.	FISCAL YEAR	SHEET NO.	TOTAL SHEETS
HAWAII	HAW.	M-3500(1)	1980	9	57

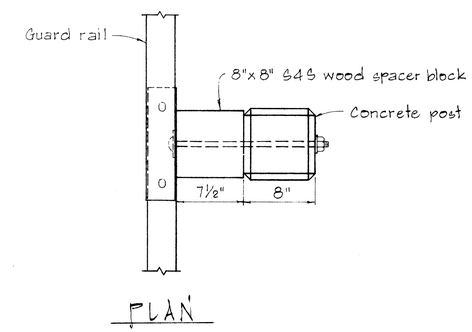

PLAN

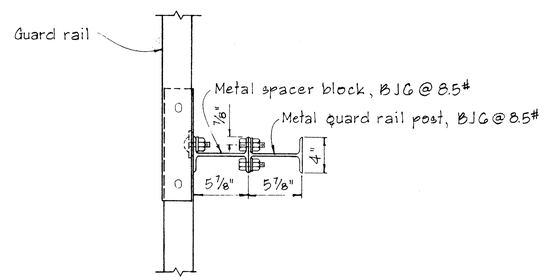

PLAN

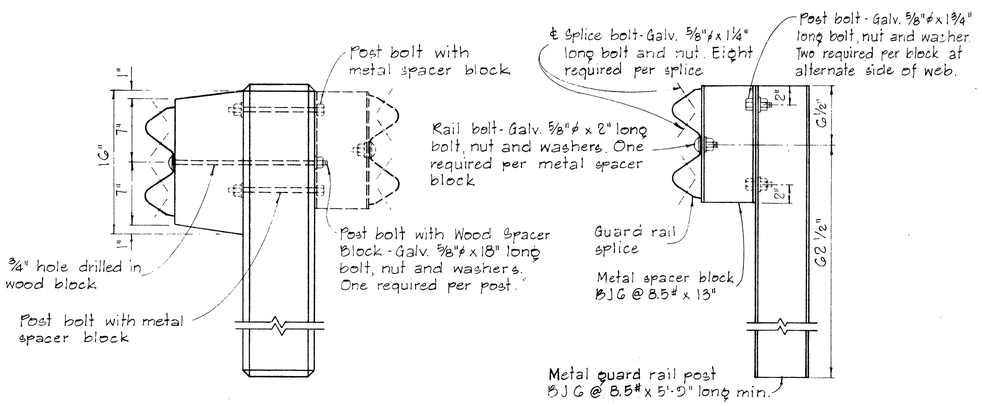

SINGLE METAL GUARD RAIL ON METAL POST WITH METAL SPACER BLOCK

SCALE: 1½" = 1'-0"

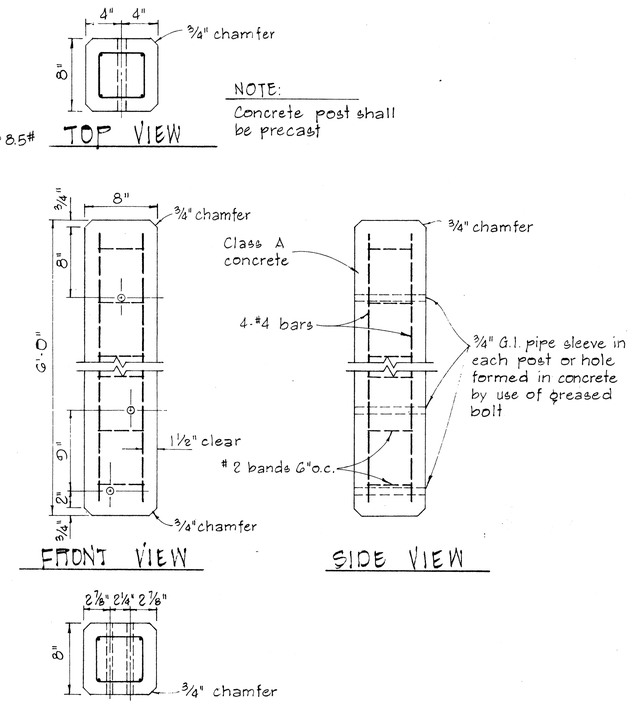

NOTE:
Concrete post shall be precast

DETAIL OF CONCRETE POST

SCALE: 1½" = 1'-0"

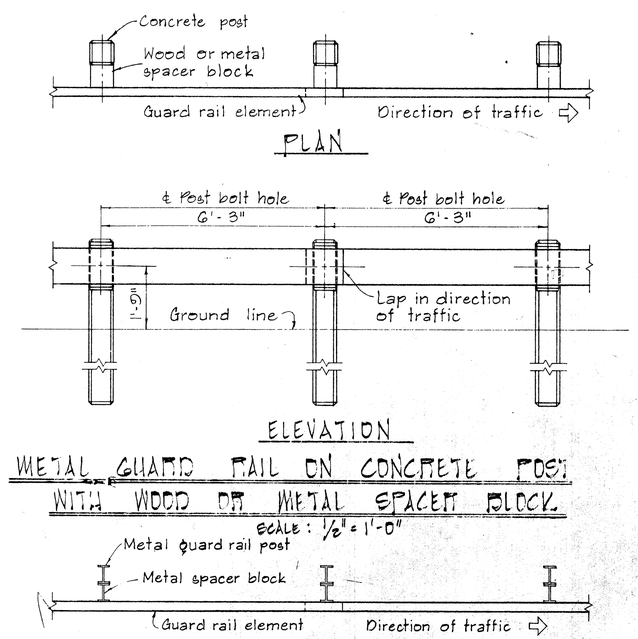

METAL GUARD RAIL ON CONCRETE POST WITH WOOD OR METAL SPACER BLOCK

SCALE: ½" = 1'-0"

METAL GUARD RAIL ON METAL POST WITH METAL SPACER BLOCK

SCALE: ½" = 1'-0"

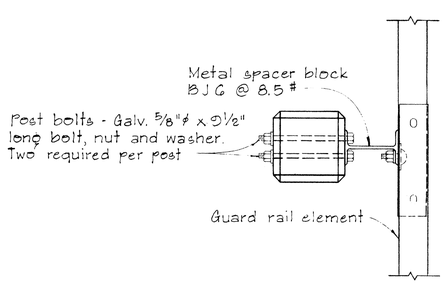

PLAN

SINGLE METAL GUARD RAIL ON PRECAST CONCRETE POST WITH WOOD OR METAL SPACER BLOCK

SCALE: 1½" = 1'-0"

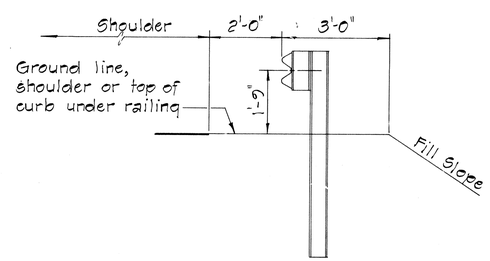

AT SHOULDER SECTION

TYPICAL METAL GUARD RAIL DETAIL

SCALE: ½" = 1'-0"

APPROVAL RECOMMENDED:
Eiichi Tanaka — TRAFFIC ENGINEER — 12/23/69 DATE

APPROVED:
Hulbert S. Takeuchi — ASSISTANT CHIEF, ENGINEERING — 12-30-69 DATE

NO.	REVISION	APPROVED BY	DATE

STATE OF HAWAII
DEPARTMENT OF TRANSPORTATION
LAND TRANSPORTATION FACILITIES DIVISION

STANDARD DETAILS

METAL GUARD RAIL

SCALE: AS SHOWN — NOV. 1968

SHEET No. 3 OF 8 SHEETS — DT 500

ORIGINAL PLAN	SURVEY PLOTTED BY	DATE
	DRAWN BY	
	TRACED BY	
NOTE BOOK	DESIGNED BY	
	QUANTITIES BY	
No.	CHECKED BY	

PRINTED ON NO. 1000H CLEARPRINT

FED. ROAD DIST. NO.	STATE	FED. AID PROJ. NO.	FISCAL YEAR	SHEET NO.	TOTAL SHEETS
HAWAII	HAW.	M-3500(1)	1980	10	57

BOLT DIMENSIONS		
TYPE A BOLT	D	L
Splice Bolt	5/16"	1 1/4"
Post Bolt for Conc. Post w/ Double Wood Blocks	3/32"	24"
Post Bolt for Conc. Post w/ Single Wood Block	3/32"	18"
Rail Bolt for Metal Block	3/32"	2"

BOLT DIMENSIONS	
TYPE B BOLT	L
Post Bolt for Conc. Post w/ Metal Blocks	9 1/2"
Post Bolt for Metal Post w/ Metal Block	1 3/4"

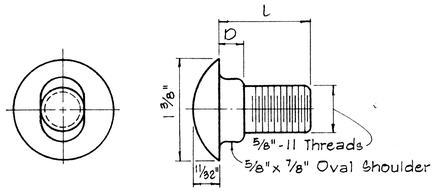

TYPE A BOLT

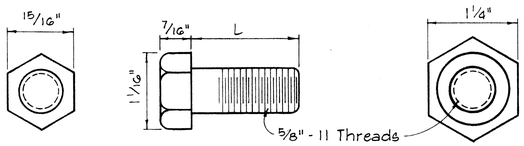

TYPE B BOLT

SPLICE RAIL AND POST BOLTS

Scale: Full Size

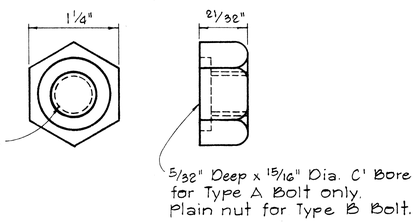

HEXAGON NUT

Scale: Full Size

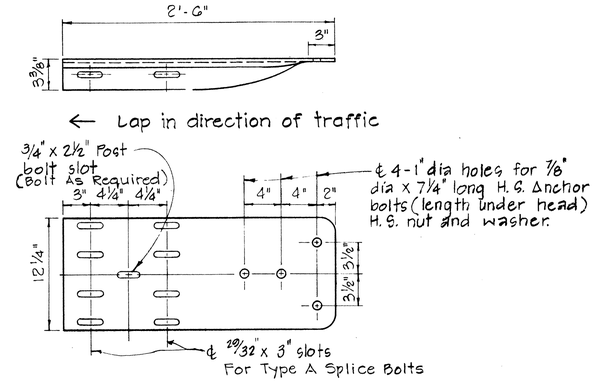

SPECIAL END SHOE

Scale: 1 1/2" = 1'-0"

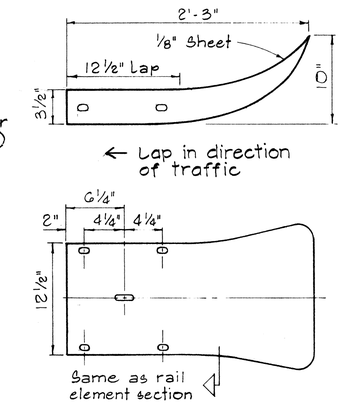

FLARED END

Scale: 1 1/2" = 1'-0"

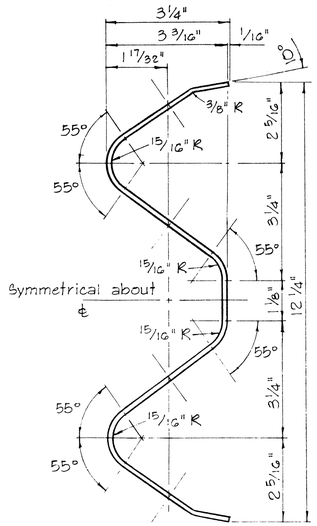

RAIL ELEMENT SECTION

Scale: 6" = 1'-0"

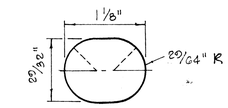

SPLICE BOLT SLOT

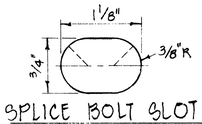

SPLICE BOLT SLOT FOR ALL ENDS

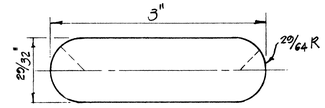

SPLICE BOLT SLOT FOR SPECIAL END SHOE

Scale: Full Size

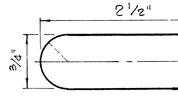

POST BOLT SLOT

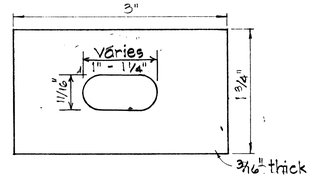

RAIL WASHER

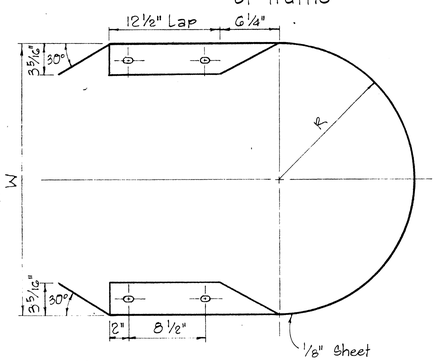

← Lap in direction of traffic

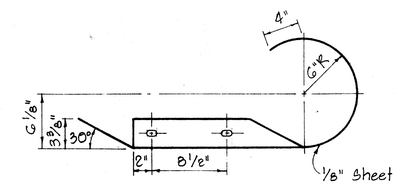

← Lap in direction of traffic

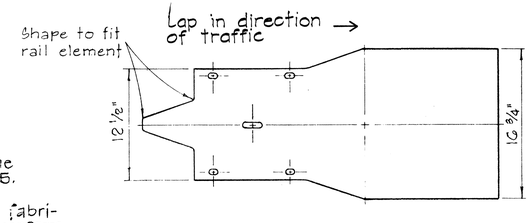

MEDIAN END

Scale: 1 1/2" = 1'-0"

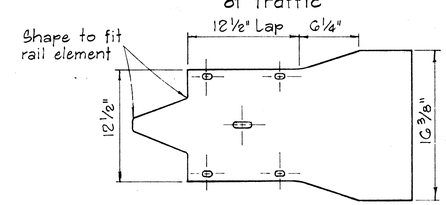

CURVED END

Scale: 1 1/2" = 1'-0"

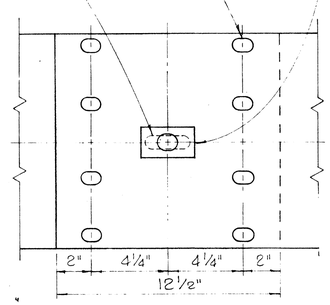

RAIL SPLICE

Scale: 3" = 1'-0"

NOTES:

1. H.S. Bolts shall conform to the requirements of ASTM A 325.
2. Special End Shoe shall be fabricated from 10 Gage steel conforming to the requirements of AASHO 180.

MEDIAN END DIMENSIONS		
TYPE OF POST AND BLOCK	W	R
Double Metal Guard Rail on Concrete Post with Wood Blocks	29 3/4"	14 7/8"
Double Metal Guard Rail on Concrete Post with Metal Blocks (BJG)	26 1/2"	13 1/4"
Double Metal Guard Rail on Metal Post with Metal Blocks (BJG)	24 3/8"	12 3/16"

NO.	REVISION	APPROVED BY	DATE
1	Revised Hole Size for Rectangular Rail Washer	H.T.	8/10/77

APPROVAL RECOMMENDED:

Eric Tanaka — 12/23/69
TRAFFIC ENGINEER — DATE

APPROVED:

Hung S. Sakai — 12-30-69
ASSISTANT CHIEF, ENGINEERING — DATE

STATE OF HAWAII
DEPARTMENT OF TRANSPORTATION
LAND TRANSPORTATION FACILITIES DIVISION

STANDARD DETAILS

METAL GUARD RAIL

Scale: As Noted — August, 1968.

SHEET No. 4 OF 8 SHEETS — DT 501

ORIGINAL PLAN	SURVEY PLOTTED BY	DATE
	DRAWN BY	
	TRACED BY	
NOTE BOOK	DESIGNED BY	
No.	QUANTITIES BY	
	CHECKED BY	

PRINTED ON NO. 1000H CLEARPRINT

FED. ROAD DIST. NO.	STATE	FED. AID PROJ. NO.	FISCAL YEAR	SHEET NO.	TOTAL SHEETS
HAWAII	HAW.	M-3500(1)	1980	11	57

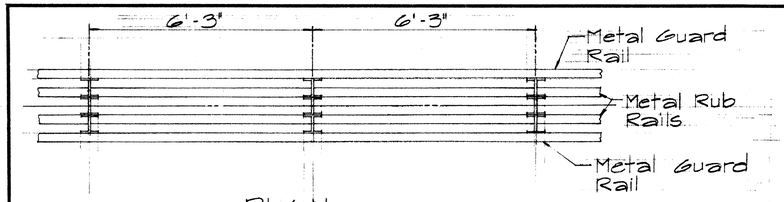

PLAN

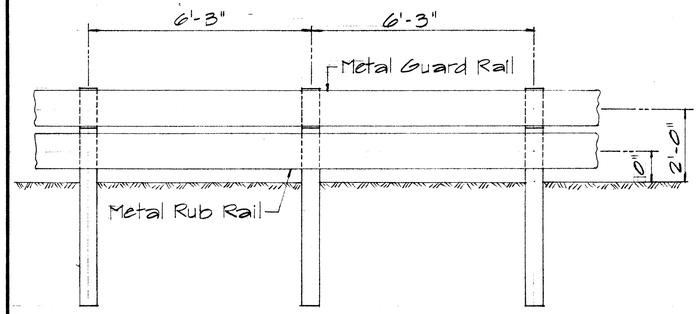

ELEVATION

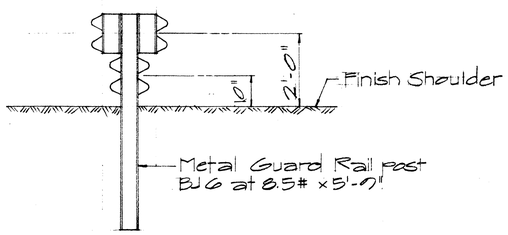

SECTION

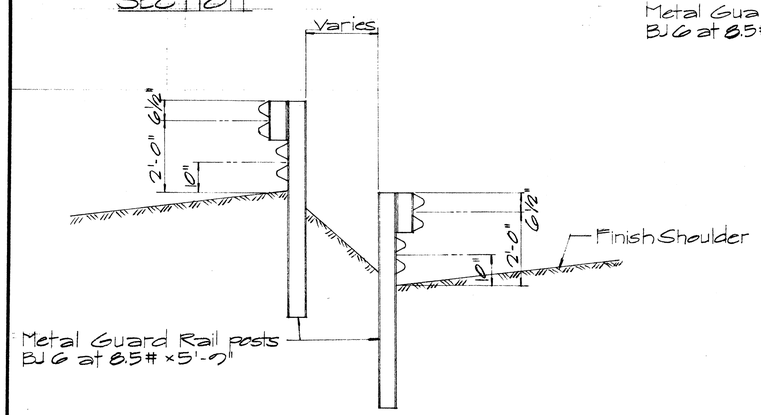

TYP. DOUBLE POST SEC.

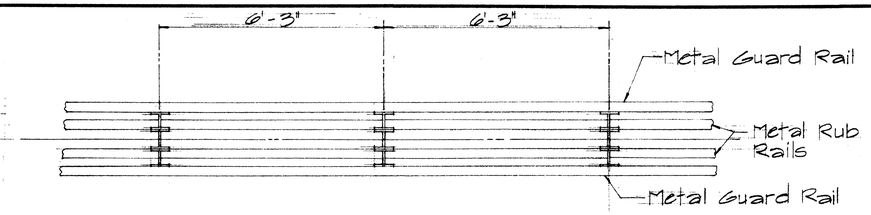

PLAN

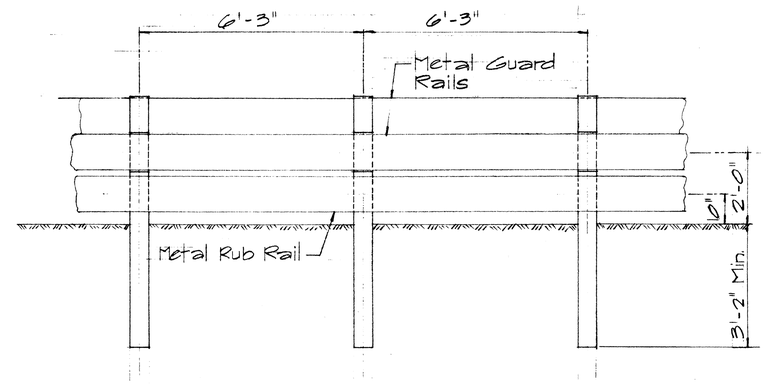

ELEVATION

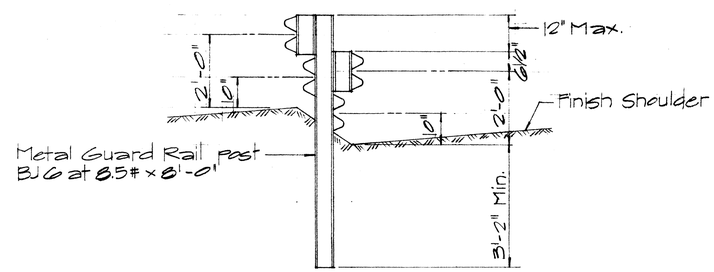

SECTION

TYPICAL SAW TOOTH INSTALLATION
Sc. 1/2" = 1'-0"

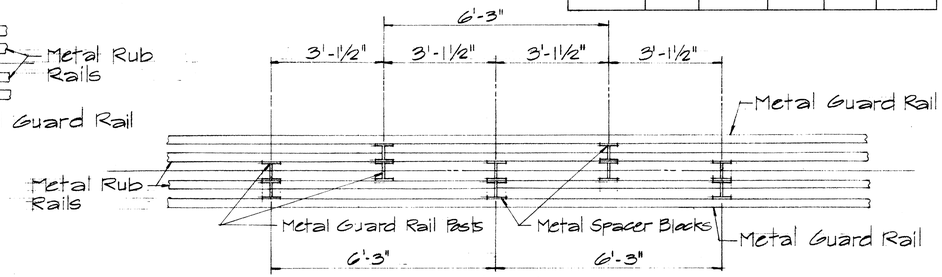

PLAN

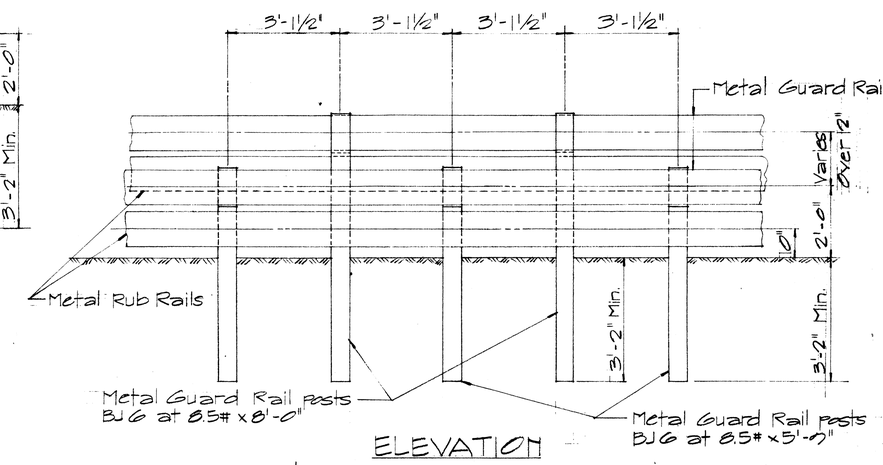

ELEVATION

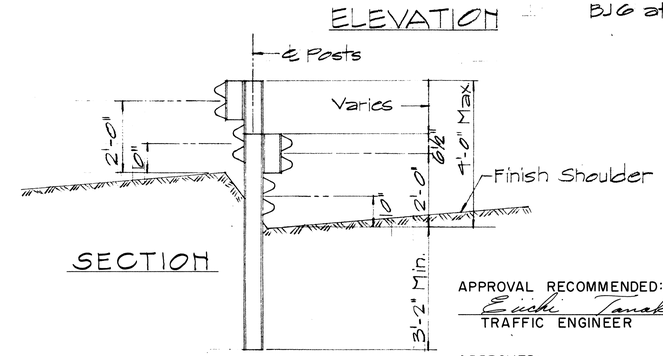

SECTION

TYPICAL STAGGERED INSTALLATION
Sc. 1/2" = 1'-0"

APPROVAL RECOMMENDED:
Eiichi Tanaka — TRAFFIC ENGINEER — 12/29/69 DATE

APPROVED:
[signature] — ASSISTANT CHIEF, ENGINEERING — 12-30-69 DATE

NO.	REVISION	APPROVED BY	DATE

STATE OF HAWAII
DEPARTMENT OF TRANSPORTATION
LAND TRANSPORTATION FACILITIES DIVISION

STANDARD DETAIL
METAL GUARD RAIL
WITH RUB RAIL

Scale: 1/2" = 1'-0" Feb. 1969

SHEET No. 5 OF 8 SHEETS DT 514

ORIGINAL PLAN	SURVEY PLOTTED BY	DATE
	DRAWN BY	
	TRACED BY	
NOTE BOOK	DESIGNED BY	
	QUANTITIES BY	
No.	CHECKED BY	

PRINTED ON NO. 1000H CLEARPRINT

11

FED. ROAD DIST. NO.	STATE	FED. AID PROJ. NO.	FISCAL YEAR	SHEET NO.	TOTAL SHEETS
HAWAII	HAW.	M-3500(1)	1980	12	57

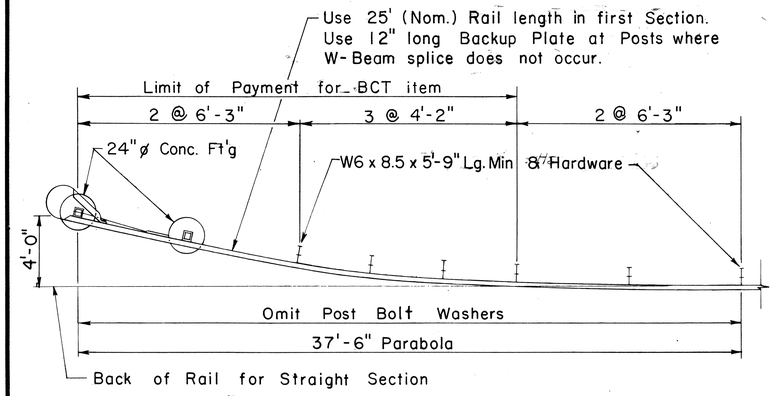

PLAN
Scale: 1/4" = 1'-0"

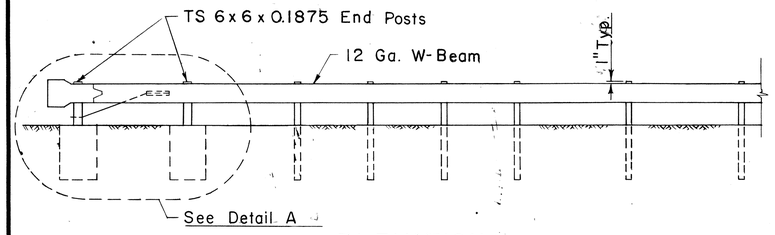

ELEVATION
Scale: 1/4" = 1'-0"

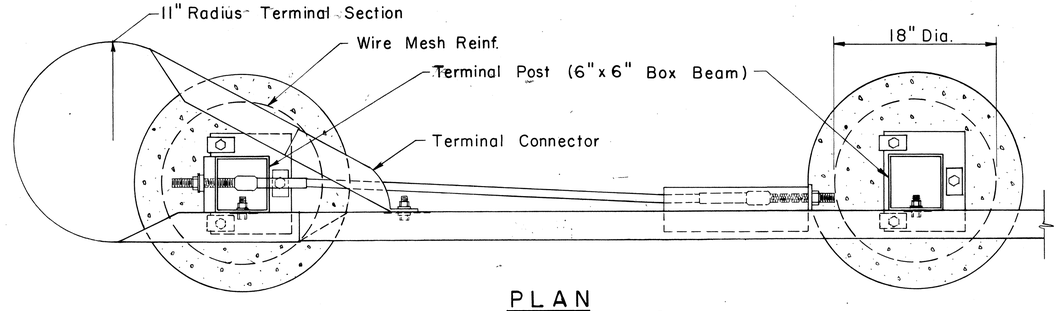

PLAN

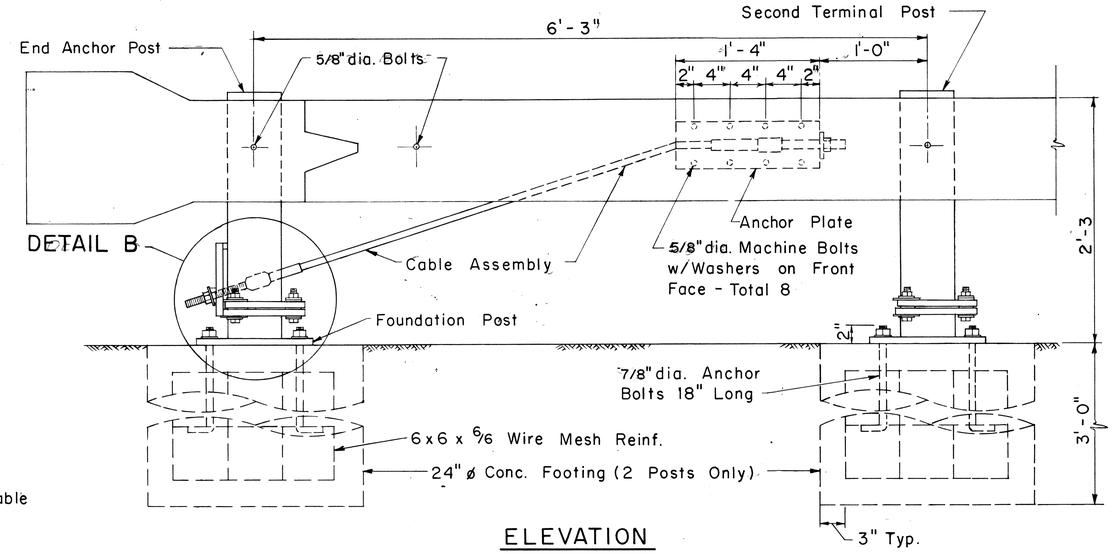

ELEVATION
DETAIL A
Scale: 1 1/2" = 1'-0"

NOTES:

1. Anchor Plate and Anchor Cable Assembly (Standard Swaged Fitting and Stud). See Standard Detail Sheet No. DT 520.
2. Other Anchor Cable Assemblies may be used. Minimum breaking strength of assembly should be 40,000 lbs.
3. Second Terminal Post does not require holes to accomodate Anchor Cable.
4. Slip Base Load shall be controlled with a Calibrated Torque Wrench - Torque 155 - 170 ft. lbs.
5. Concrete shall be Class A.

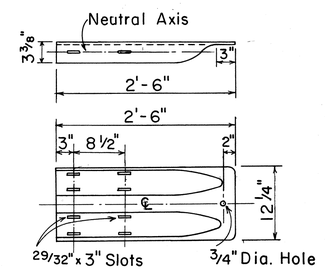

TERMINAL CONNECTOR
Scale: 1" = 1'-0"

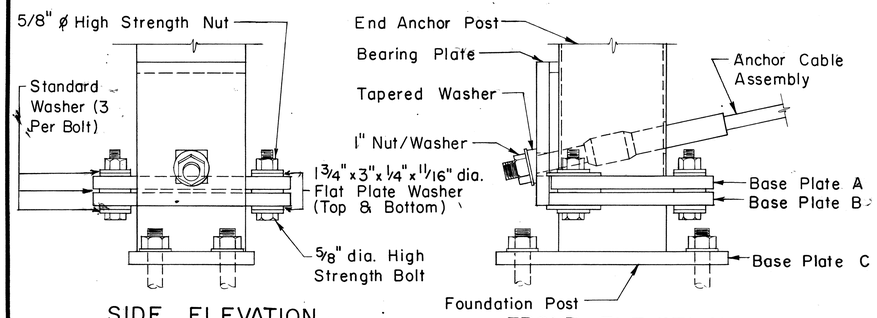

SIDE ELEVATION
FRONT ELEVATION
DETAIL B

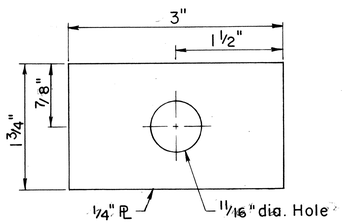

FLAT PLATE WASHER
Scale: Full Size

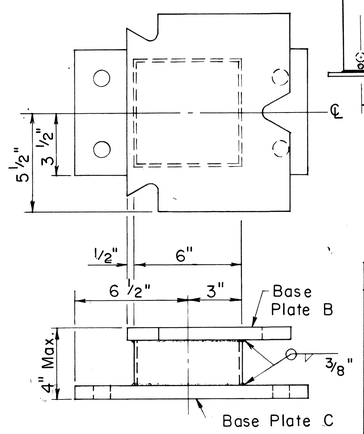

FOUNDATION POST
Scale: 3" = 1'-0"

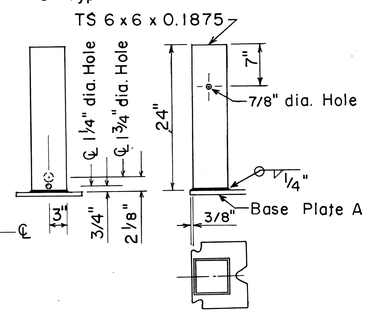

TERMINAL POST
Scale: 1" = 1'-0"

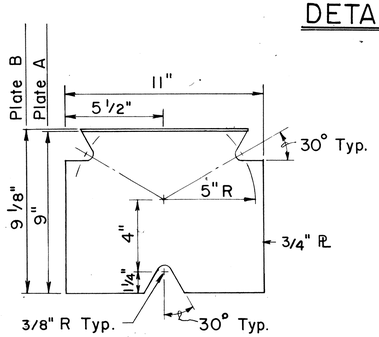

BASE PLATES A & B
Scale: 3" = 1'-0"

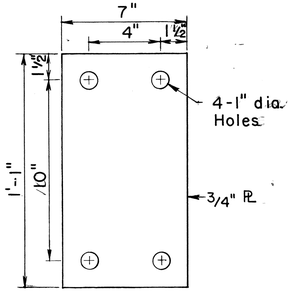

BASE PLATE C
Scale: 3" = 1'-0"

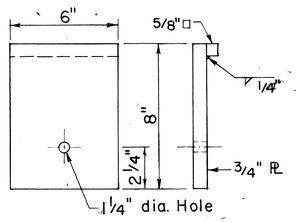

BEARING PLATE
Scale: 3" = 1'-0"

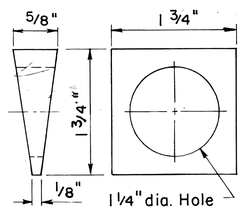

TAPERED WASHER
Scale: Full Size

APPROVAL RECOMMENDED:

Eiichi Tanaka — TRAFFIC ENGINEER — 6/14/78 DATE

APPROVED:

Herbert Sakai — ASSISTANT CHIEF, ENGINEERING — 6/15/78 DATE

NO.	REVISION	APPROVED BY	DATE
	Supersedes Sht. DT 519 Approved 12/30/69	H.I.	6/15/78

STATE OF HAWAII
DEPARTMENT OF TRANSPORTATION
LAND TRANSPORTATION FACILITIES DIVISION

STANDARD DETAIL

BREAKAWAY CABLE TERMINAL (BCT)

Scale: As Shown — Date: June 1978

SHEET No. 6 OF 8 SHEETS DT 519

SURVEY PLOTTED BY		DATE
DRAWN BY		
TRACED BY		
DESIGNED BY		
QUANTITIES BY		
CHECKED BY		
ORIGINAL PLAN	NOTE BOOK	No.

FED. ROAD DIST. NO.	STATE	FED. AID PROJ. NO.	FISCAL YEAR	SHEET NO.	TOTAL SHEETS
HAWAII	HAW.	M-3500(1)	1980	C.0.125-1	57

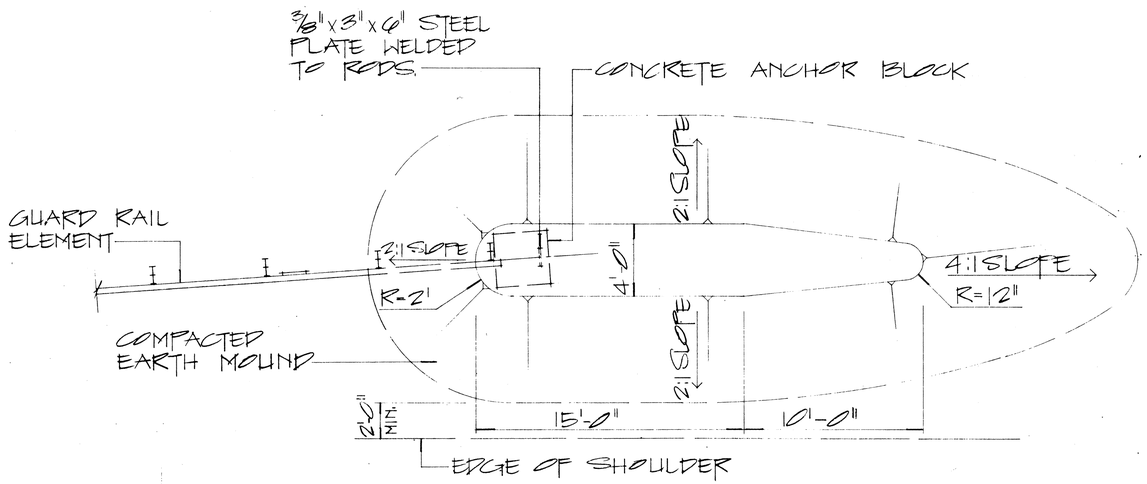

PLAN

EARTH MOUND DETAIL (SINGLE GUARD RAIL)

SCALE: 1/4" = 1'-0"

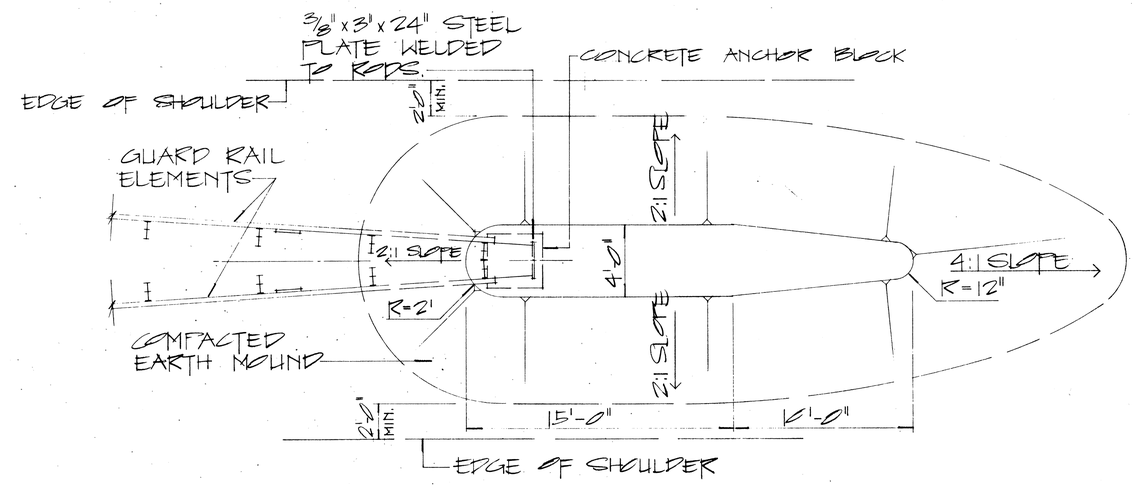

PLAN

EARTH MOUND DETAIL (DOUBLE GUARD RAIL)

SCALE: 1/4" = 1'-0"

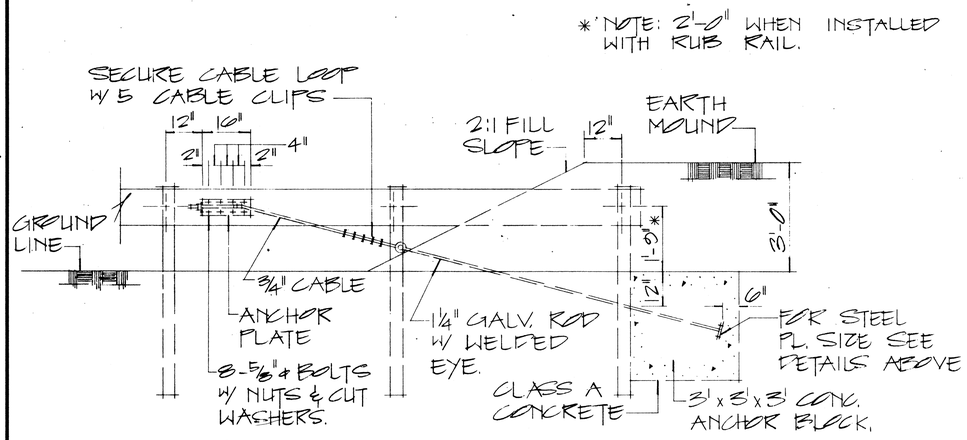

ANCHOR BLOCK DETAIL IN EARTH MOUND

SCALE: 1/2" = 1'-0"

NOTE:

1. GALVANIZED ANCHOR ROD, METAL GUARD RAIL AND POST BURIED IN GROUND SHALL BE COVERED WITH a Min. 20-Mil thickness of Coal TAR ENAMEL. Conforming to AWWA Standard: C 203
2. CONCRETE, G.R.P., EXCAVATION, EARTH MOUND, ANCHOR RODS AND MISCELLANEOUS APPURTENANCES NECESSARY TO ANCHOR THE GUARD RAIL ENDS SHALL BE INCIDENTAL TO THE METAL GUARD RAIL.

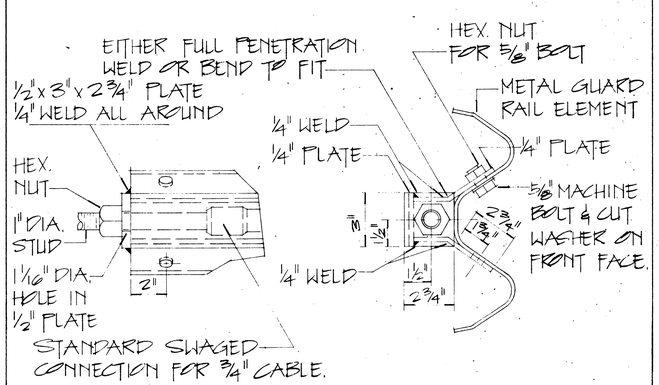

ANCHOR PLATE DETAILS

SCALE: 1" = 3"

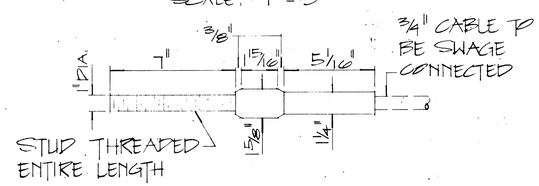

STANDARD SWAGED FITTING AND STUD

SCALE: 1" = 3"

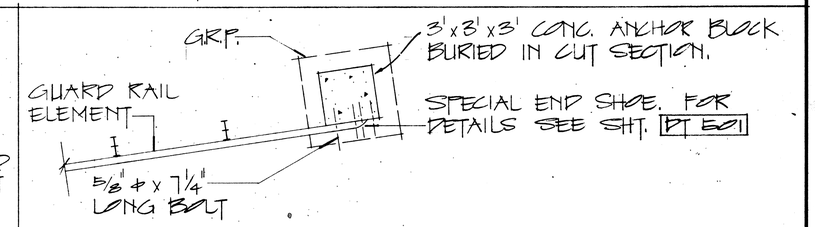

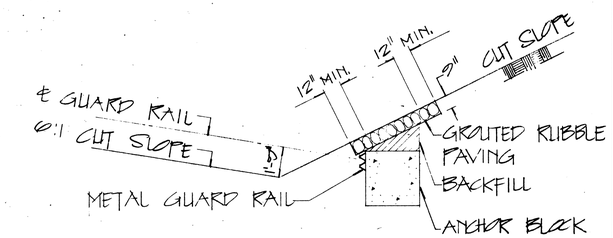

ANCHOR BLOCK IN CUT SECTION

SCALE: 1/4" = 1'-0"

APPROVAL RECOMMENDED: Euichi Tanaka 12/29/69
TRAFFIC ENGINEER — DATE

APPROVED: [signature] 12-30-69
ASSISTANT CHIEF, ENGINEERING — DATE

NO.	REVISION	APPROVED BY	DATE

STATE OF HAWAII
DEPARTMENT OF TRANSPORTATION
HIGHWAYS DIVISION

STANDARD DETAILS

EARTH MOUND AND ANCHOR BLOCK DETAILS

SCALE: AS SHOWN OCT 1969

SHEET No. GA OF 8 SHEETS PT 520

C.0.12 S-1

ORIGINAL PLAN	SURVEY PLOTTED BY	DATE
	DRAWN BY	
	TRACED BY	
NOTE BOOK	DESIGNED BY	
No.	QUANTITIES BY	
	CHECKED BY	

K+E CRYSTALENE LA 2920 TRACING PAPER

FED. ROAD DIST. NO.	STATE	FED. AID PROJ. NO.	FISCAL YEAR	SHEET NO.	TOTAL SHEETS
HAWAII	HAW.	M-3500(1)	1980	13	57

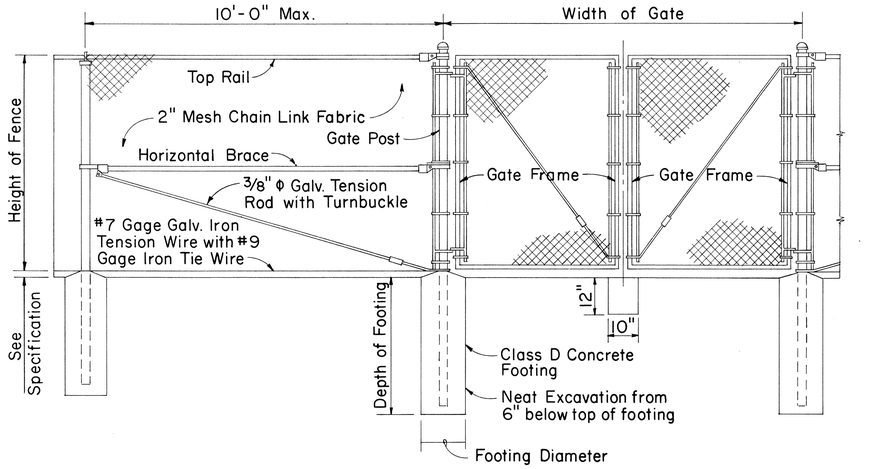

DETAIL OF CHAIN LINK GATE

NOTE: 1. Gate fork latch and lock, flush plate and anchor, and plunger shall be installed with Gates, and shall be considered as incidental to Chain Link Fence Gate.

2. Gate frames shall be mitered and welded at corners.

3. Fence detail not shown shall be in accordance with the Standard Specifications.

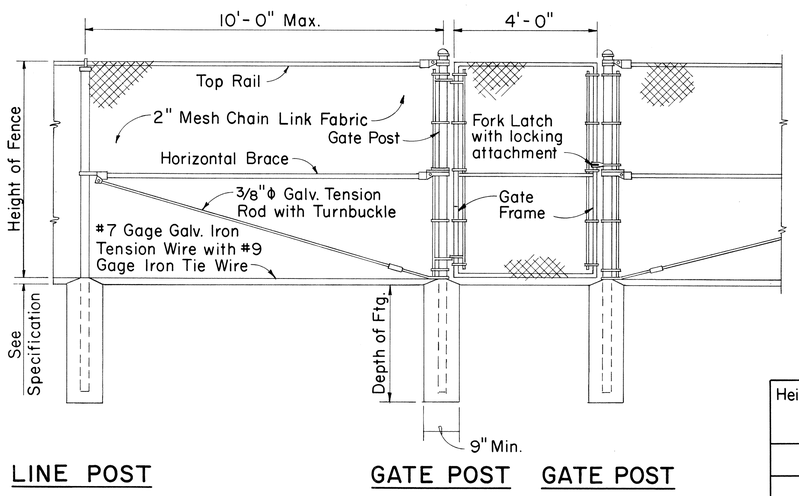

DETAIL OF 4 FT. CHAIN LINK GATE

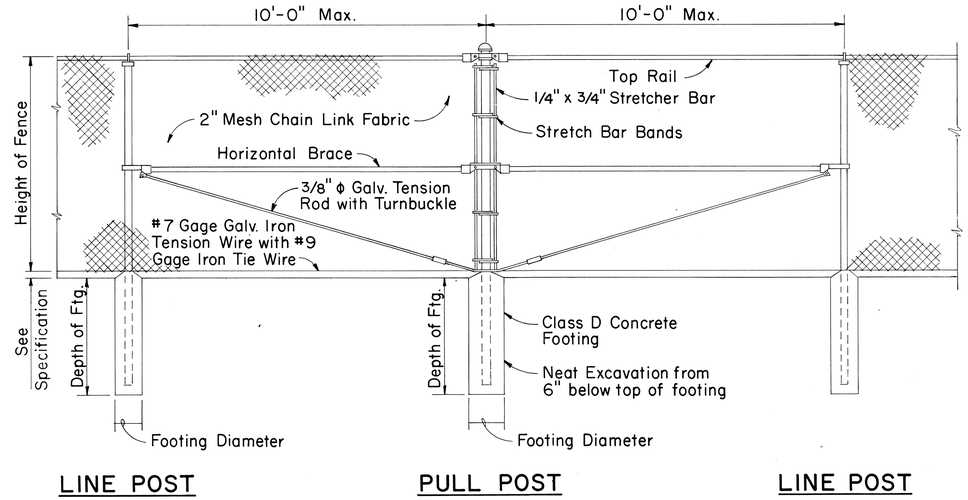

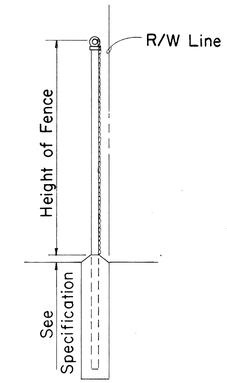

TYPICAL SECTION (WITH CONCRETE FOOTING)

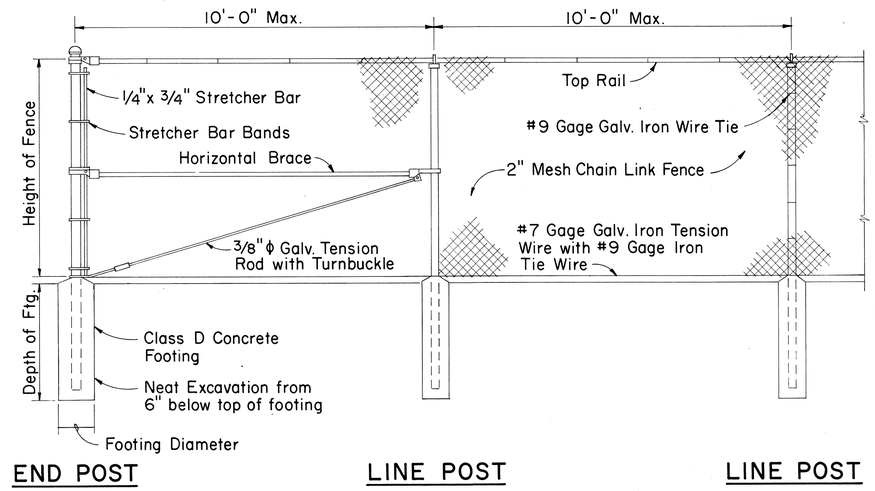

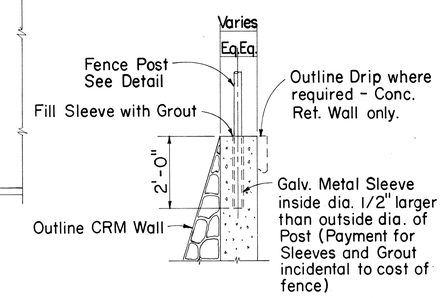

TYPICAL SECTION (ON CRM & CONC. RET. WALL)

CHAIN LINK FENCE DETAILS

Height of Fence	Minimum Depth of Footing		Minimum Footing Diameter	
	Line Post	Corner, Pull, End and Gate Posts	Line Post	Corner, Pull and End Posts
3'	2'-0"	2'-6"	8"	8"
4'	2'-6"	2'-6"	8"	8"
5'	3'-0"	3'-0"	8"	8"
6'	3'-0"	3'-0"	8"	9"

APPROVAL RECOMMENDED:

HIGHWAY DESIGN ENGINEER — DATE 12-4-69

APPROVED:

ASSISTANT CHIEF, ENGINEERING — DATE 12-10-69

NO.	REVISION	APPROVED BY	DATE

STATE OF HAWAII
DEPARTMENT OF TRANSPORTATION
LAND TRANSPORTATION FACILITIES DIVISION

STANDARD DETAILS

CHAIN LINK FENCE (WITH TOPRAIL)

Scale: 1/2" = 1'-0" Date:

SHEET No. 7 OF 8 SHEETS | DD 607.1

ORIGINAL PLAN	SURVEY PLOTTED BY	DATE
	DRAWN BY	"
	TRACED BY	"
NOTE BOOK	DESIGNED BY	"
	QUANTITIES BY	"
No.	CHECKED BY	"

FED. ROAD DIST. NO.	STATE	FED. AID PROJ. NO.	FISCAL YEAR	SHEET NO.	TOTAL SHEETS
HAWAII	HAW.	M-3500(1)	1980	14	57

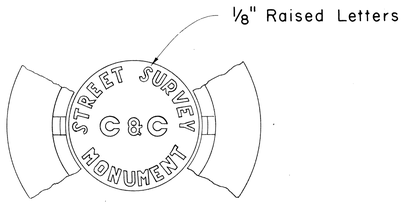

TOP VIEW OF COVER AND PORTION OF FRAME

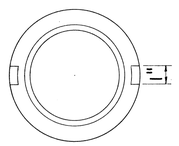

BOTTOM OF COVER

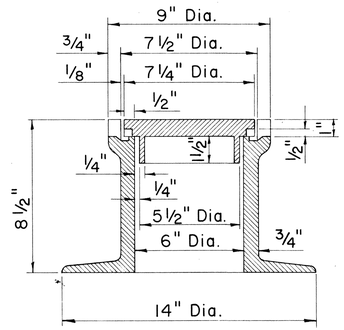

SECTIONAL VIEW OF FRAME AND COVER

STREET SURVEY MONUMENT CASTINGS

Scale: 3" = 1'-0"

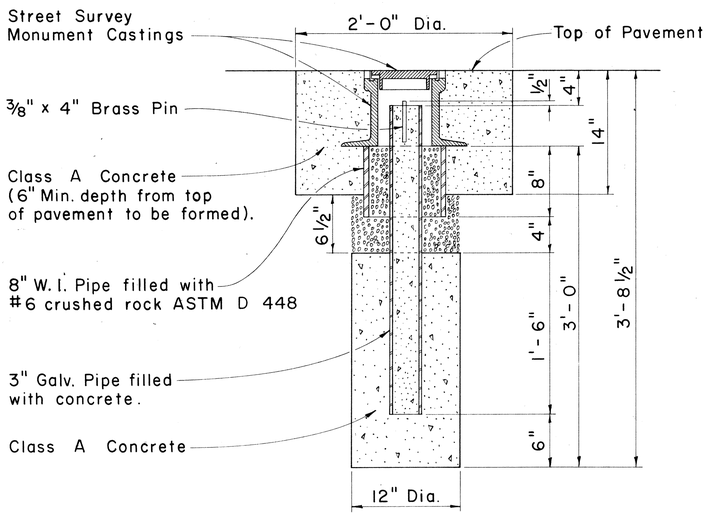

NOTE:

Where the excavation extends into solid rock the depth may be decreased if approved by the Engineer.

STREET SURVEY MONUMENT

Scale: 1 1/2" = 1'-0"

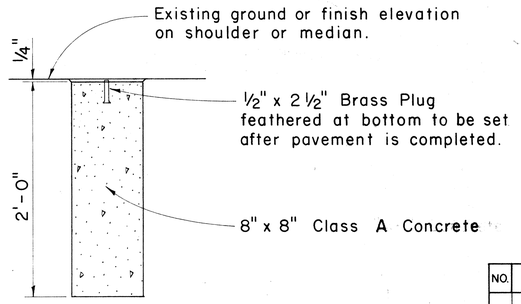

DETAIL FOR ℄ AND REFERENCE SURVEY MONUMENT

Scale: 1 1/2" = 1'-0"

APPROVAL RECOMMENDED:

HIGHWAY DESIGN ENGINEER — DATE 12-4-69

APPROVED:

ASSISTANT CHIEF, ENGINEERING — DATE 12-10-69

NO.	REVISION	APPROVED BY	DATE

STATE OF HAWAII
DEPARTMENT OF TRANSPORTATION
LAND TRANSPORTATION FACILITIES DIVISION

STANDARD DETAILS

CENTERLINE, REFERENCE SURVEY AND C & C STREET SURVEY MONUMENTS

Scale: As Shown

SHEET No. 8 OF 8 SHEETS | DD 613.1

ORIGINAL PLAN	SURVEY PLOTTED BY	DATE
	DRAWN BY	"
	TRACED BY	"
NOTE BOOK	DESIGNED BY	"
	QUANTITIES BY	"
No.	CHECKED BY	"