FED. ROAD DIST. NO.	STATE	PROJ. NO.	FISCAL YEAR	SHEET NO.	TOTAL SHEETS
HAWAII	HAW.	HWY-M-05-04	2004	9	33

All Aluminum 6061T6 Alloy and Stainless Steel Components.

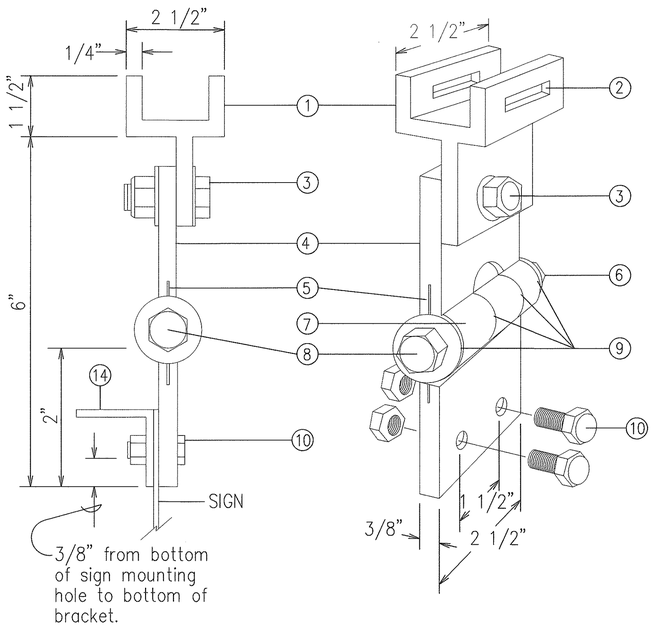

FIXED LENGTH NON-ADJUSTABLE SWING SIGN BRACKET

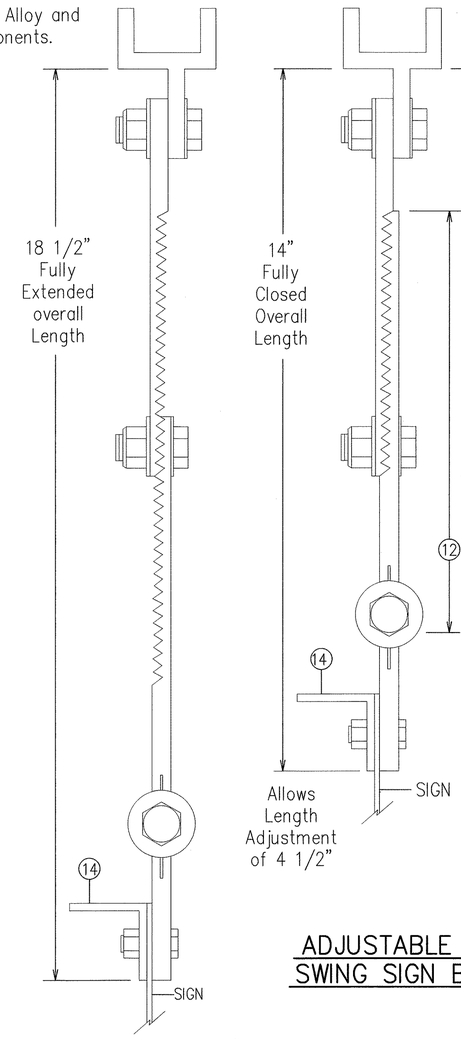

ADJUSTABLE LENGTH SWING SIGN BRACKET

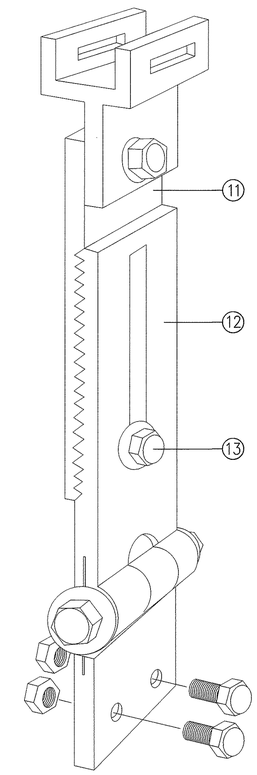

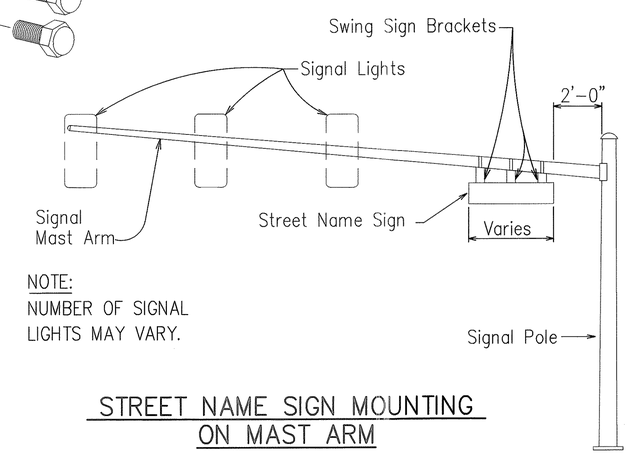

NOTE:
NUMBER OF SIGNAL LIGHTS MAY VARY.

STREET NAME SIGN MOUNTING ON MAST ARM

1. Pivotal Upper Bracket
2. 1 5/8"x1/4" Slot for double strapping to electrolier mast arm. (M2G-34S(HD) .030"x3/4"" Heavy Duty Stainless Steel Strap with M2G-34B(HD) Buckle recommended.)
3. 1/2" – 13x1 1/2" Stainless Steel Hex Head Bolt with Stainless Steel Hex Lock Nut and 1/16" Stainless Steel Washer (both sides). Allows upper bracket to pivot and align with electrolier mast arm.
4. 6" Overall drop with Fixed Length Sign Bracket
5. Stainless Steel Dampener Spring (Removable)
6. Stainless Steel Hex Lock Nut with 1/16" Stainless Steel Washer
7. 1" O.D. Axle Housing
8. 1/2" – 13x4" Stainless Steel Hex Head Bolt with 1/16" Stainless Steel Washer
9. Oilite Bushing
10. Sign Mounting Sets, consisting of two each 5/16" – 18x1" Stainless Steel Hex Head Bolt with Stainless Steel Hex Lock Nut. Two holes on 1 1/2" centers provide positive lock sign mounting to bracket.
11. 8 1/4" overall length Upper Adjustable Sign Bracket section
12. 9" overall length Lower Adjustable Sign Bracket section, including Axle Housing (8" overall length to top of Axle Housing)
13. 1/2" – 13x1 1/2" Stainless Steel Hex Bolt with Stainless Steel Hex Lock Nut and 1/16" Stainless Steel Washers (both sides). Loosen lock nut, adjust bracket teeth to level sign.
14. 1 1/4"X1 1/4"X1/8" Aluminum Angle

Note: Dimensions may vary slightly.

ORIGINAL PLAN	SURVEY PLOTTED BY	DATE
	DRAWN BY	
NOTE BOOK	TRACED BY	
	DESIGNED BY	
	QUANTITIES BY	
No.	CHECKED BY	

CARY K. KONNO LICENSED PROFESSIONAL ENGINEER No. 4575-C HAWAII, U.S.A.

THIS WORK WAS PREPARED BY ME OR UNDER MY SUPERVISION

STATE OF HAWAII
DEPARTMENT OF TRANSPORTATION
HIGHWAYS DIVISION

STREET NAME SIGN MOUNTING DETAIL

TRAFFIC OPERATIONAL IMPROVEMENTS AT VARIOUS LOCATIONS
PIILANI HIGHWAY AT KANANI ROAD

Project No. HWY-M-05-04

Scale: AS NOTED Date: May 2004

SHEET No. 1 OF 1 SHEETS

Tue, 20 Apr 2004 - 9:21am
M:\DOT\1999700700 Maui Intersections\CAD\Sheets\009-sign_detail.dwg