FED. ROAD DIST. NO.	STATE	FED. AID PROJ. NO.	FISCAL YEAR	SHEET NO.	TOTAL SHEETS
HAWAII	HAW.	STP-0470(4)	1997	5	16

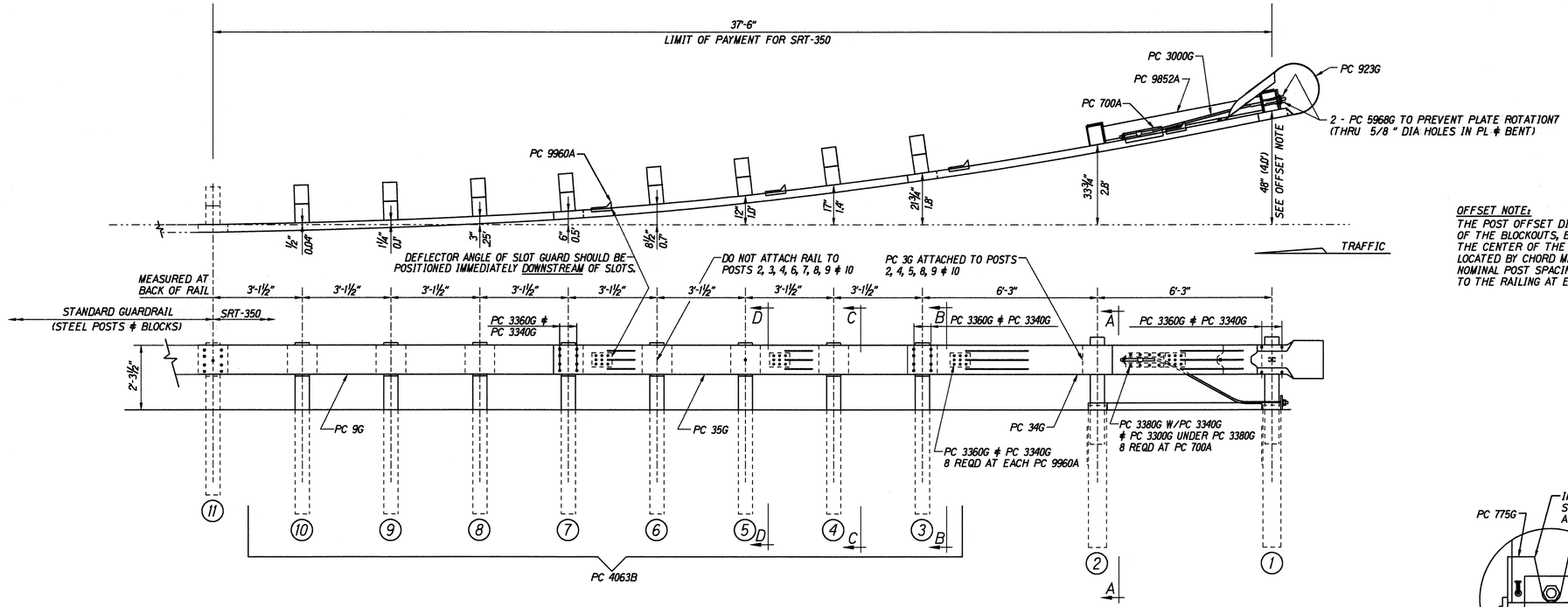

OFFSET NOTE:
THE POST OFFSET DIMENSIONS ARE GIVEN TO THE CENTER OF THE TRAFFIC FACE OF THE BLOCKOUTS, EXCEPT AT THE FIRST TWO POSTS, WHERE THE DIMENSION IS TO THE CENTER OF THE TRAFFIC FACE OF THE POST. OFFSET POINTS ARE TO BE LOCATED BY CHORD MEASUREMENTS AT THE BACK OF THE RAIL EQUAL TO THE NOMINAL POST SPACINGS SHOWN. POSTS ARE TO BE SET APPROXIMATELY RADIAL TO THE RAILING AT EACH POST LOCATION.

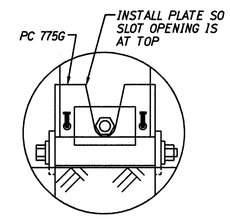

BEARING PLATE ORIENTATION

BILL OF MATERIAL

PC	QTY	DESCRIPTION
3G	7	12/12"/BACKUP (GUARDRAIL)
9G	1	12/12'6"/6'3/S (GUARDRAIL)
34G	1	12/12'6/S SRT-1 (GUARDRAIL)
35G	1	12/12'6/6'3/S SRT-2 (GUARDRAIL)
700A	1	CABLE ANCHOR BRACKET
705G	1	2"ø x 5½" PIPE
736G	2	5'0 TUBE SLEEVE
766G	2	¼x 18 x 24 SOIL PLATE
775G	1	⅝x 6 x 8 BEARING PLATE
923G	1	12/BARRIER/98" (TERMINAL)
3000G	1	¾x 6'6 CABLE
3300G	22	⅞" WASHER
3320G	1	7/16x 1¾x 3 WASHER
3340G	77	⅝" HEX NUT
3360G	53	⅝"ø x 1¼" SPLICE BOLT
3380G	8	⅝"ø x 1½" HEX HD BOLT
3478G	4	⅝"ø x 7½" HEX HD BOLT
3497G	2	⅝"ø x 9½" HEX HD BOLT
3500G	2	⅝"ø x 10" POST BOLT
3580G	8	⅝"ø x 18" POST BOLT
3900G	1	1" WASHER
3910G	2	1" HEX NUT
4063B	8	6'0 POST 6 x 8
4075B	8	14" BLOCK 6 x 8
4147B	2	3' 9 POST 5½x 7½
5968G	2	16d NAIL SRT
9852A	1	STRUT ASSEMBLY
9960A	4	SLOT GUARD
9961G	1	⅞x 3 x 4 PLATE WASHER

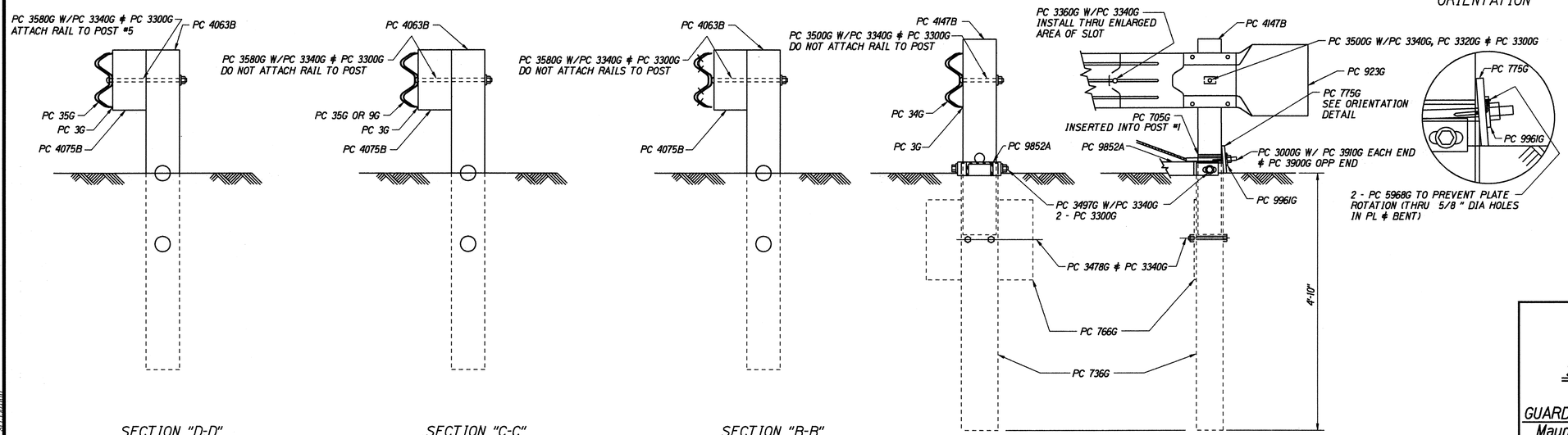

SECTION "D-D"
(@ POST #5)

SECTION "C-C"
(@ POSTS #4, #6, #8, #9 & #10)

SECTION "B-B"
(@ POSTS #3 & #7)

SECTION "A-A"
(@ POST #2)

ENLARGED VIEW @ POST #1

STATE OF HAWAII
DEPARTMENT OF TRANSPORTATION
HIGHWAYS DIVISION

SRT-350
SLOTTED RAIL TERMINAL
KALAE HIGHWAY
GUARDRAIL & SHOULDER IMPROVEMENTS
Maunaloa Highway to Farrington Avenue
Fed. Aid Project No. STP-0470(4)

Scale: As Noted — Date: Sept., 1995

SHEET No. 1 OF 3 SHEETS

ORIGINAL PLAN — SURVEY PLOTTED BY ___ DRAWN BY ___ TRACED BY ___ DESIGNED BY ___ QUANTITIES BY ___ CHECKED BY ___ DATE ___
NOTE BOOK No. ___

hdt/traffic/grd/srt350.dgn