FED. ROAD DIST. NO.	STATE	PROJ. NO.	FISCAL YEAR	SHEET NO.	TOTAL SHEETS
HAWAII	HAW.	460A-01-99M	1999	7	41

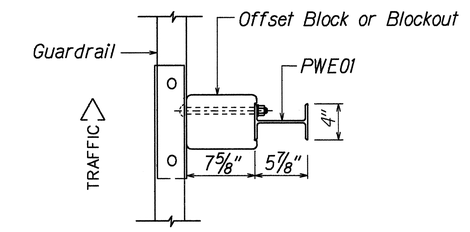

PLAN

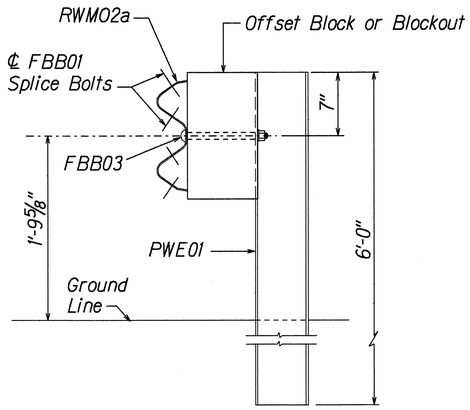

ELEVATION

STRONG POST W-BEAM GUARDRAIL

(SGR04a)

NOTE:
All Holes are
3/4" Dia.

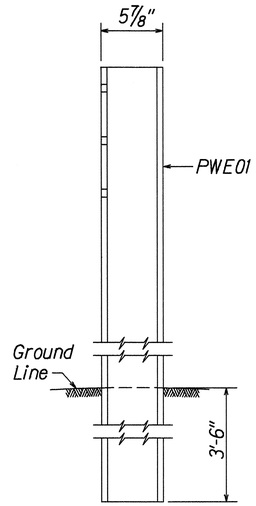

SIDE

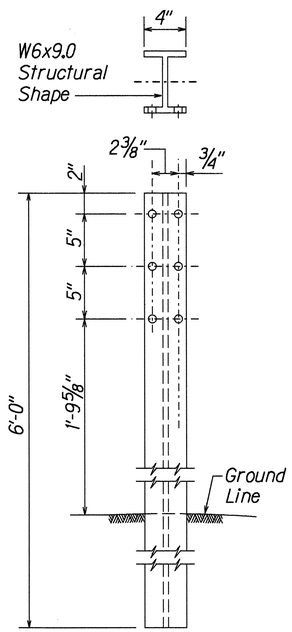

FRONT

W-BEAM STRONG POST (PWE01)

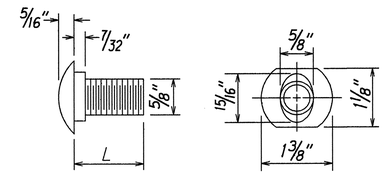

DESIGNATOR	L
FBB01	1 3/8"
FBB02	2"
FBB03	10"

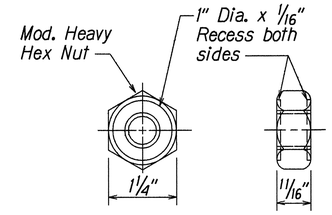

GUARDRAIL BOLTS AND

RECESSED NUT

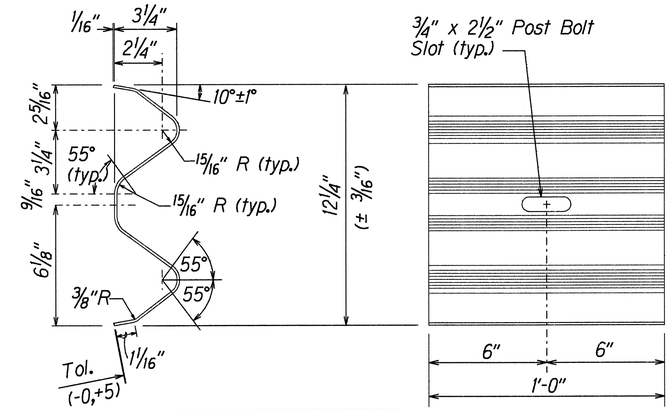

DESIGNATOR	BASE METAL THICKNESS
RWB01b	17/128"

W-BEAM BACK-UP-PLATE (RWB01b)

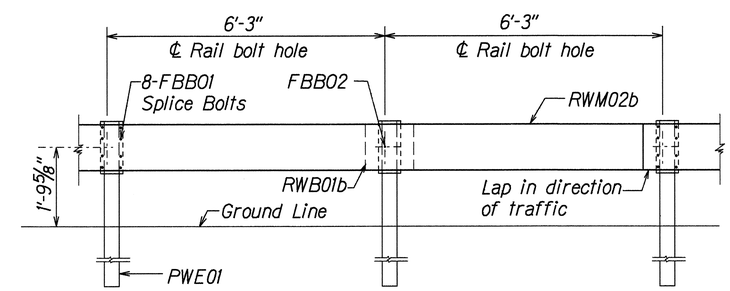

ELEVATION

STRONG POST W-BEAM GUARDRAIL WITH

RECYCLED OFFSET BLOCK OR PLASTIC BLOCKOUT

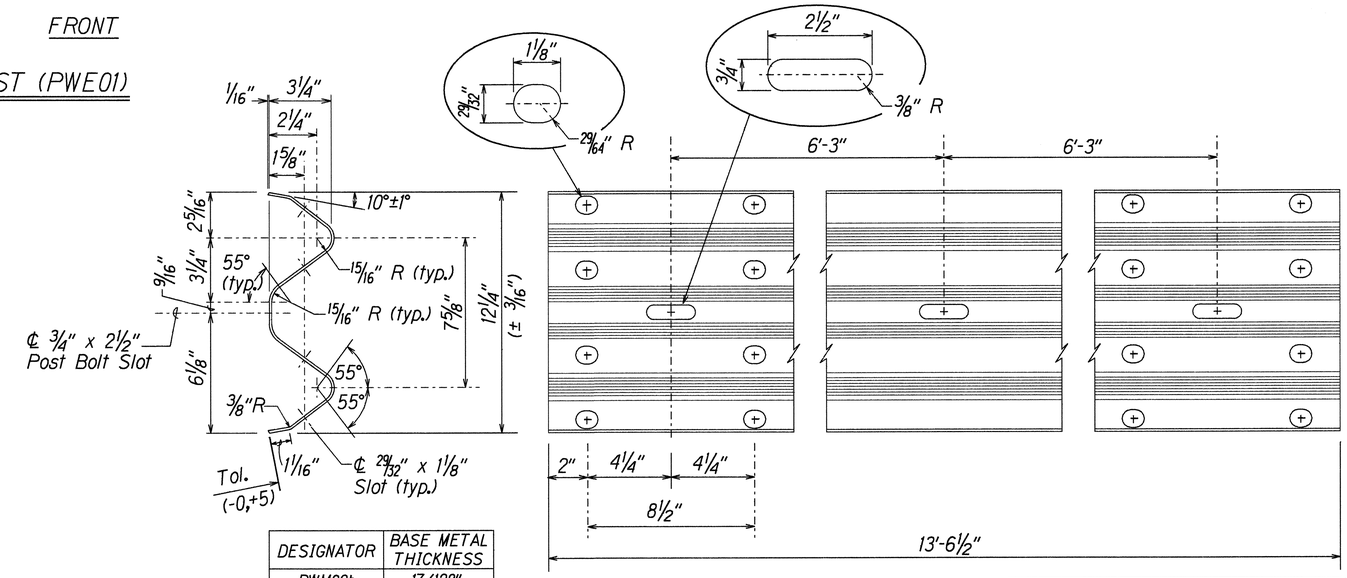

DESIGNATOR	BASE METAL THICKNESS
RWM02b	17/128"

2 SPACE W-BEAM GUARDRAIL (RWM02b)

ORIGINAL PLAN	SURVEY PLOTTED BY ___ DATE ___
	DRAWN BY X
	TRACED BY X
NOTE BOOK	DESIGNED BY X
	QUANTITIES BY
No.	CHECKED BY

r3/01/99 tdl:uby/guardrail/wbeamspdgn (standard plan TE-50 r03/06/87)

STATE OF HAWAII
DEPARTMENT OF TRANSPORTATION
HIGHWAYS DIVISION

STRONG POST W-BEAM GUARDRAIL

MAUNALOA HIGHWAY RESURFACING
Maunaloa Village to Mahana
Project No. 460A-01-99M

Scale: NTS Date: April, 1999

SHEET No. 1 OF 1 SHEETS