| FED. ROAD DIST. NO. | STATE | FED. AID PROJ. NO. | FISCAL YEAR | SHEET NO. | TOTAL SHEETS |
|---|---|---|---|---|---|
| HAWAII | HAW. | | | | |

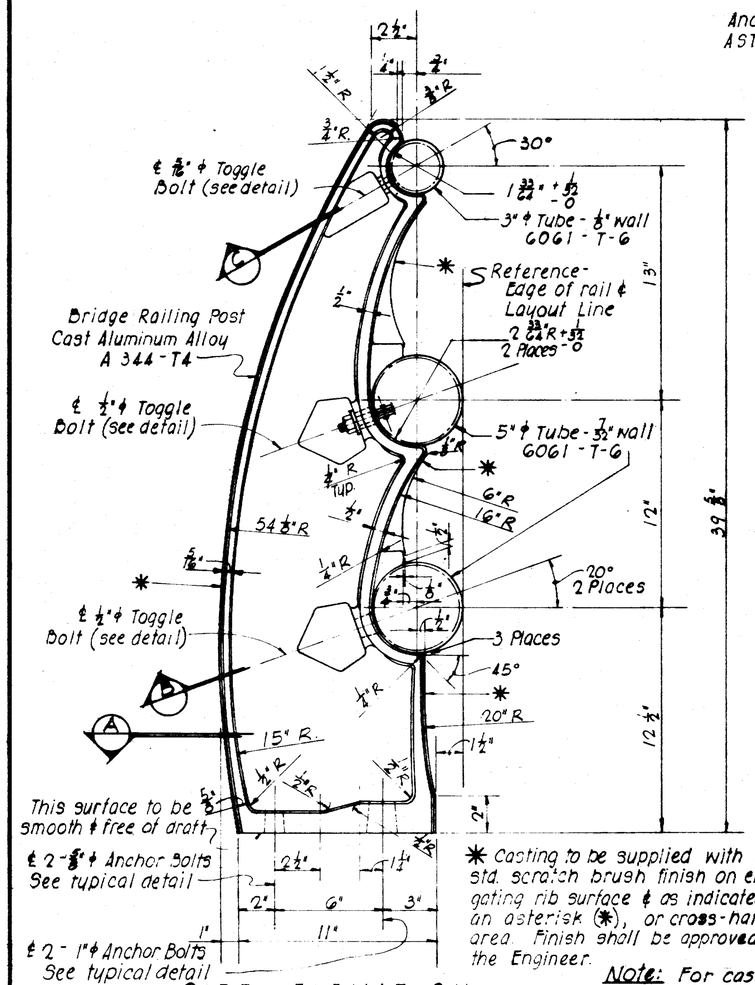


SIDE ELEVATION

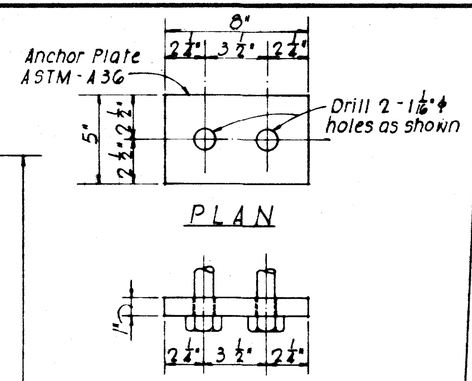


## ANCHOR PLATE DETAIL

SCALE: 3" = 1'-0"

**NOTE!!**

Unless otherwise specified, Dft. angles - 3°, corner radii - 1/8" R, Fillet radii - 3/8" radii, Catg. tol. - ± 1/16", & wall thickness - ± 1/32".

✱ Casting to be supplied with a std. scratch brush finish on entire gating rib surface & as indicated by an asterisk (✱), or cross-hatched area. Finish shall be approved by the Engineer.

**Note:** For cast post specifications, see Special Provisions.

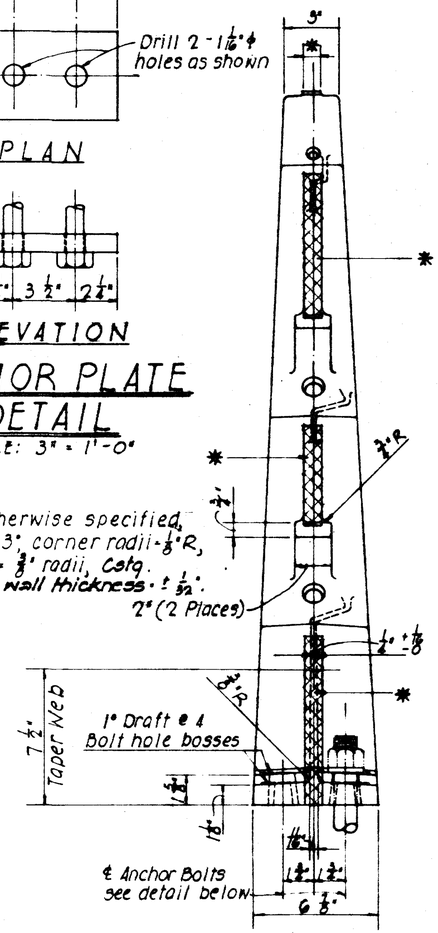


END ELEVATION

## TYPICAL RAIL POST DETAILS

SCALE: 3" = 1'-0"

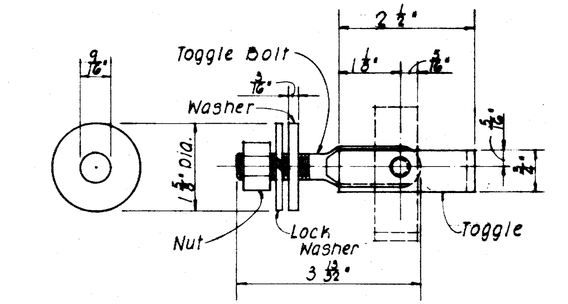


WASHER — SIDE ELEVATION ASSEMBLAGE

**NOTE!!**

Toggle Bolt Material - 1/2" - 13 N.C. 1335 C.R. - Steel heat treated R.C. 32 - 38 ASTM - A354

Toggle Material - 1015 H.R. steel pickled and oiled. Round edges ASTM - A 303.

Washer Material - SAE 1020 H.R. steel plates. A.S.T.M - A-7 Break sharp edges.

Nut - 1/2" - 13 Amer. hex. nut - Heavy Mat'l. 1035 C.R. Stl. - Heat treated ASTM A 325

Cadmium plating on steel - Type N.S. .0005 thick ASTM - A165. (All parts)

For cast post specifications, see special provisions.

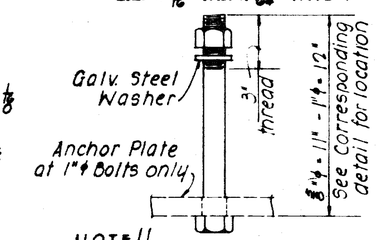


**NOTE!!**

1" ϕ & 5/8" ϕ Galvanized steel ASTM-A-325-58T Anchor Bolts.

## TYPICAL ANCHOR BOLT DETAIL

SCALE: 3" = 1'-0"

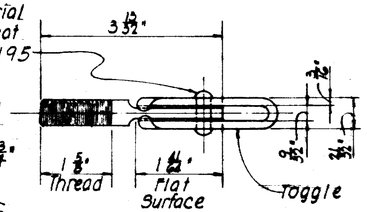


**NOTE!!**

1" dia. bolt washer size 2 1/2" O.D. x 1 1/16" I.D. x 11/64" thick.

5/8" dia. bolt washer size 1 3/4" O.D. x 11/16" I.D. x 7/64" thick

TOP PLAN

## 1/2" ϕ TOGGLE BOLT DETAIL

SCALE:

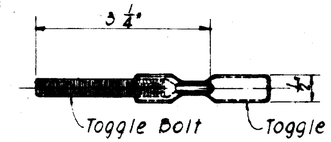


TOP PLAN

**NOTE!!**

Toggle Bolt Mat'l. - 5/16" - 18 N.C. SAE 1020 C.R. Steel unannealed after forming

Toggle Mat'l. - H.R. steel pickled and oiled

Washer Mat'l. - C.R. steel (1020)

Nut Mat'l. - 5/16" - 18 N.C. Amer. std. hex. nut cold punched (1020 stl)

Cadmium plating on steel. Type N.S. .0005 thick - ASTM - A165. (All Parts)

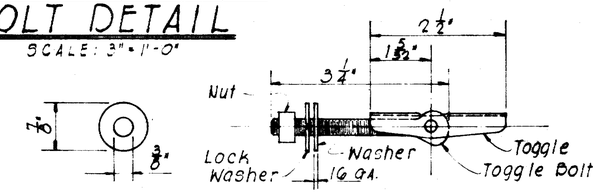


WASHER — SIDE ELEVATION ASSEMBLAGE

## 5/16" ϕ TOGGLE BOLT DETAIL

**General Note:** Metal bridge railing shown is for aluminum bridge railing. See Special Provisions for alternate railing in steel.

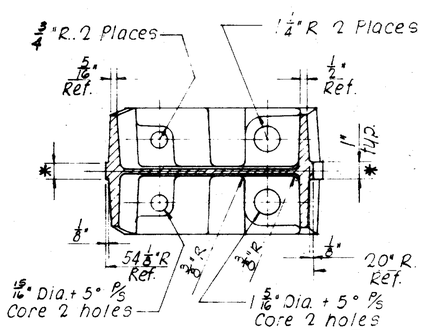


SECTION (A)

SCALE: 3" = 1'-0"

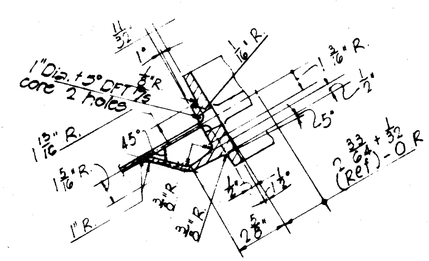


SECTION (B)

SCALE: 3" = 1'-0"

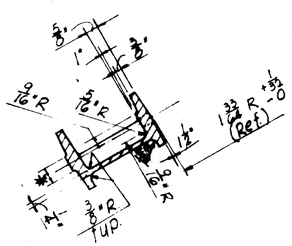


SECTION (C)

SCALE: 3" = 1'-0"

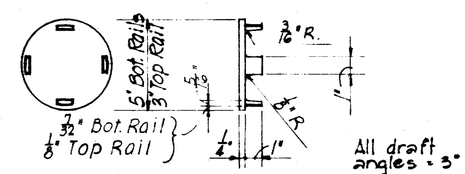


## RAIL CAP DETAIL

SCALE: 3" = 1'-0"

STATE OF HAWAII
DEPARTMENT OF TRANSPORTATION
HIGHWAYS DIVISION

STANDARD DETAILS

METAL BRIDGE RAILING

THREE RAIL COMBINATION TYPE

Scale as Noted — Date:

SHEET No. 8 OF 10 SHEETS

| ORIGINAL PLAN | SURVEY PLOTTED BY / DRAWN BY / TRACED BY / DESIGNED BY / QUANTITIES BY / CHECKED BY | DATE |
|---|---|---|
| NOTE BOOK No. | | |

PRINTED ON NO. 10001 CLEARPRINT