FED. ROAD DIST. NO.	STATE	FED. AID PROJ. NO.	FISCAL YEAR	SHEET NO.	TOTAL SHEETS
HAWAII	HAW.	STP-0450(9)	2006	7	16

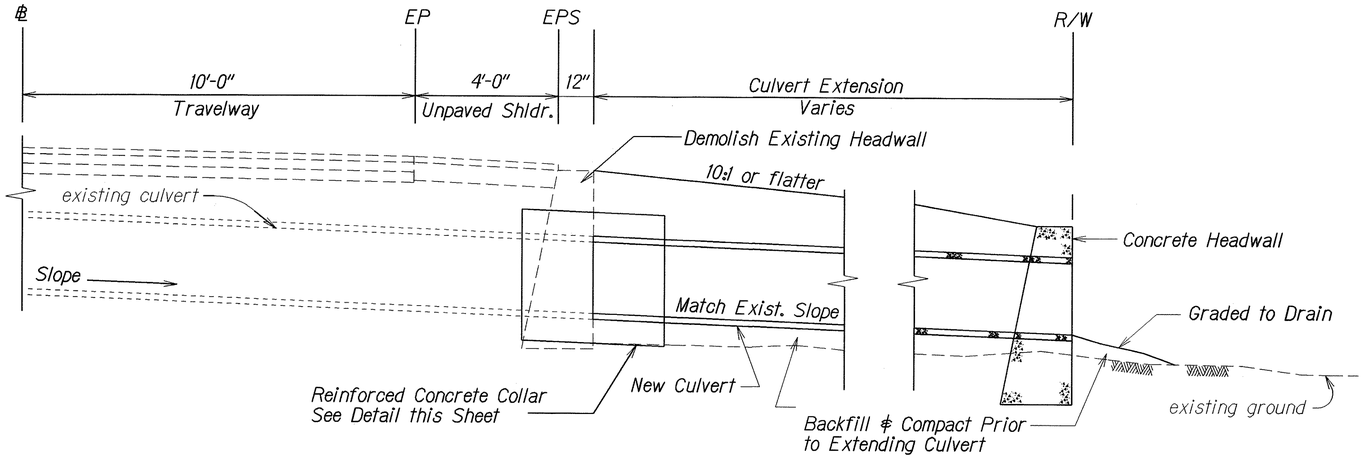

DETAIL - TYPICAL CULVERT EXTENSION DETAIL

Scale: 1/2"=1'

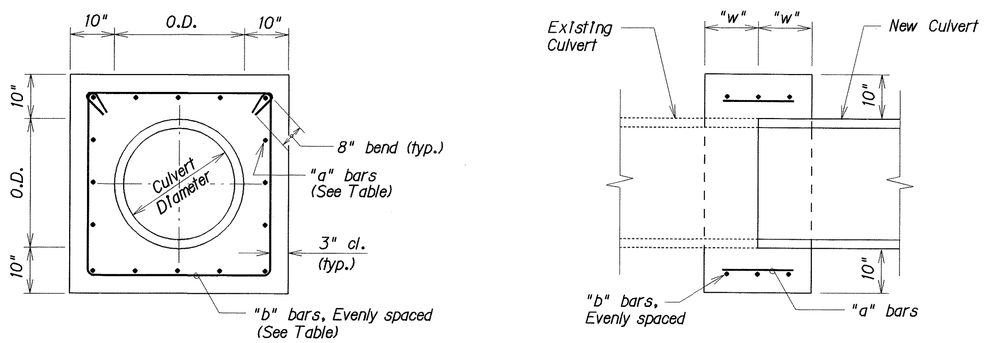

ELEVATION

SECTION

Culvert Diameter	"a" bars	"b" bars	"w"
18" to 30"	#4 @ 9"	3- #4	12"
36" to 48"	#5 @ 9"	4- #4	15"

Note: Reinforcing Steel for Concrete Collar shall conform to the requirements of ASTM 615-Grade 60.

TYPICAL DETAILS OF REINFORCED CONCRETE COLLAR

MISCELLANEOUS DRAINAGE NOTES:

1. Existing drainage system will be functional at all times during construction. Contractor is to furnish materials, equipment, labor, tools and incidentals necessary to accomplish maintenance of flow, the cost of which shall be incidental to the various contract items.
2. Demolishing and removing the existing headwalls shall not be paid for separately, but shall be considered incidental to "Concrete For Drainage System".
3. Contractor shall verify the locations of all culverts in the field. Any culvert damaged during construction shall be repaired or replaced by the Contractor at his expense.
4. Concrete shall be Class "A".
5. Inlet and Outlet conditions shall be cleaned and graded to permit free flow of run-off or as directed by the Engineer. Cleaning and grading shall be to the satisfaction of the Engineer. Above work shall be considered incidental to "Clean Existing Culverts".
6. Reinforcing Steel for Concrete Structures will not be paid for separately but shall be considered incidental to various contract items.
7. Location and elevations of new structures must be laid out in the field for the Engineer's approval.
8. Chamfer all exposed edges 1".
9. Excavation and backfilling of culvert structure will not be paid for separately but shall be considered incidental to installation of culverts.

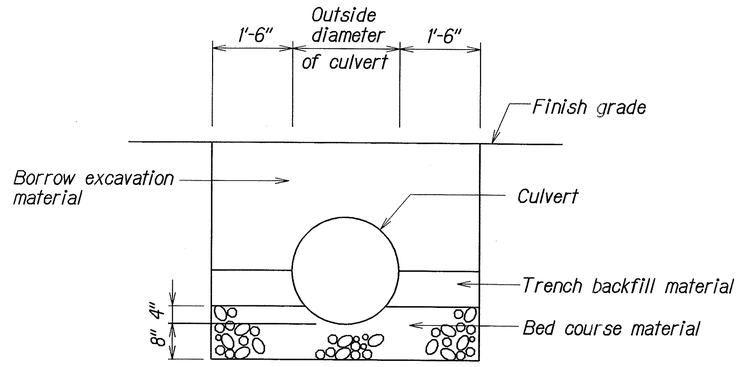

TYPICAL TRENCH BACKFILL RESTORATION

Not To Scale

STATE OF HAWAII
DEPARTMENT OF TRANSPORTATION
HIGHWAYS DIVISION

DRAINAGE DETAILS

KAMEHAMEHA V HIGHWAY
GUARDRAIL & SHOULDER IMPROVEMENTS
Kapuokoolau to Kamalo
Federal-Aid Project No. STP-0450(9)

Scale: As Shown Date: February, 2006

SHEET No. 1 OF 1 SHEETS

ORIGINAL PLAN | SURVEY PLOTTED BY | DRAWN BY | TRACED BY | DESIGNED BY | QUANTITIES BY | CHECKED BY | DATE 2/06 | NOTE BOOK | No.