FED. ROAD DIST. NO.	STATE	PROJ. NO.	FISCAL YEAR	SHEET NO.	TOTAL SHEETS
HAWAII	HAW.	HWY-M-03-21, Phase 2	2022	16	46

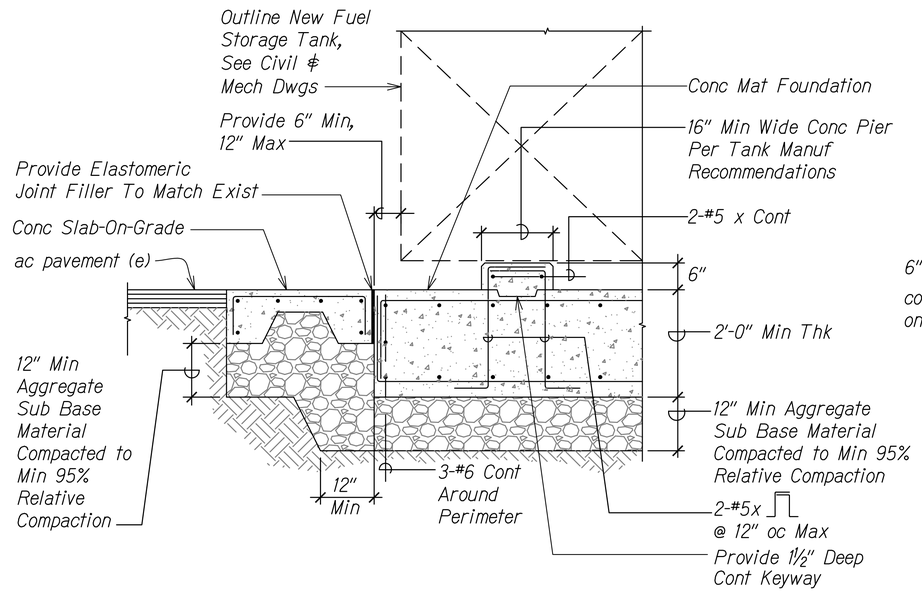

SECTION 1 S101 S301
Scale: 3/4"= 1'-0"

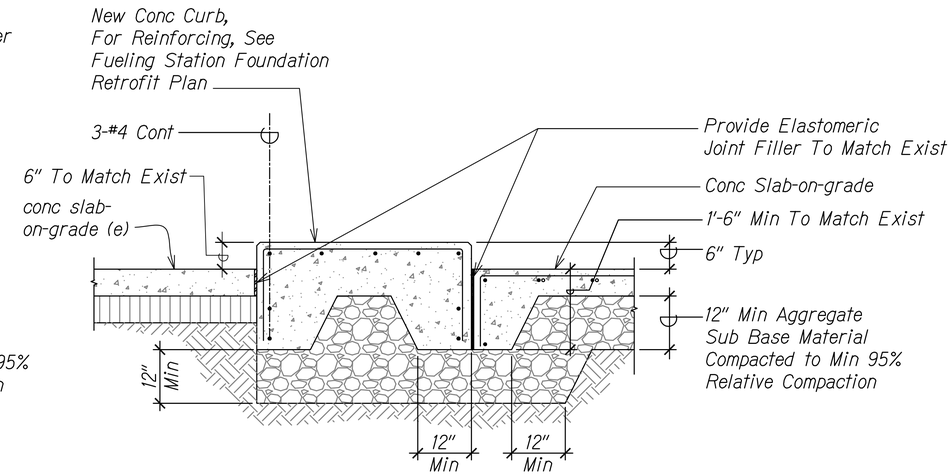

SECTION 2 S101 S301
Scale: 3/4"= 1'-0"

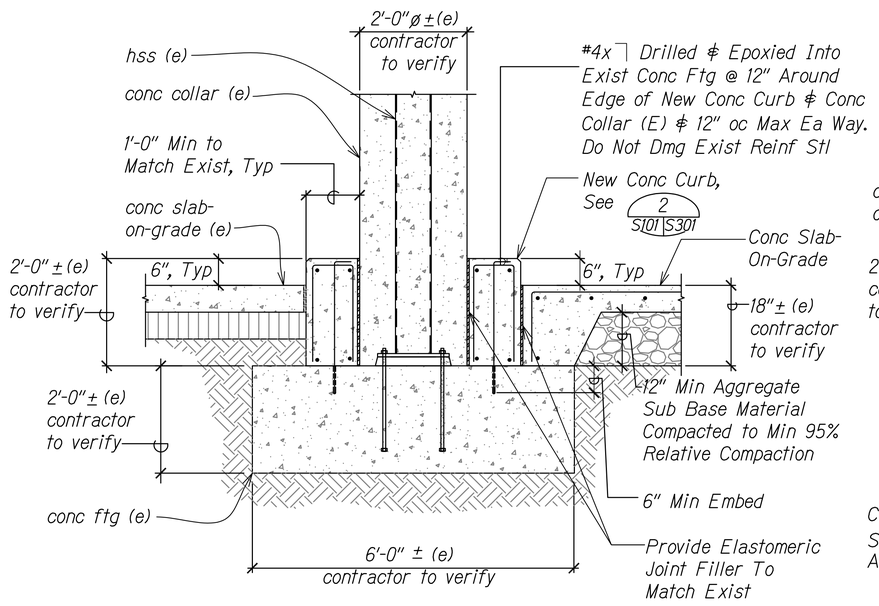

SECTION 3 S101 S301
Scale: 3/4"= 1'-0"

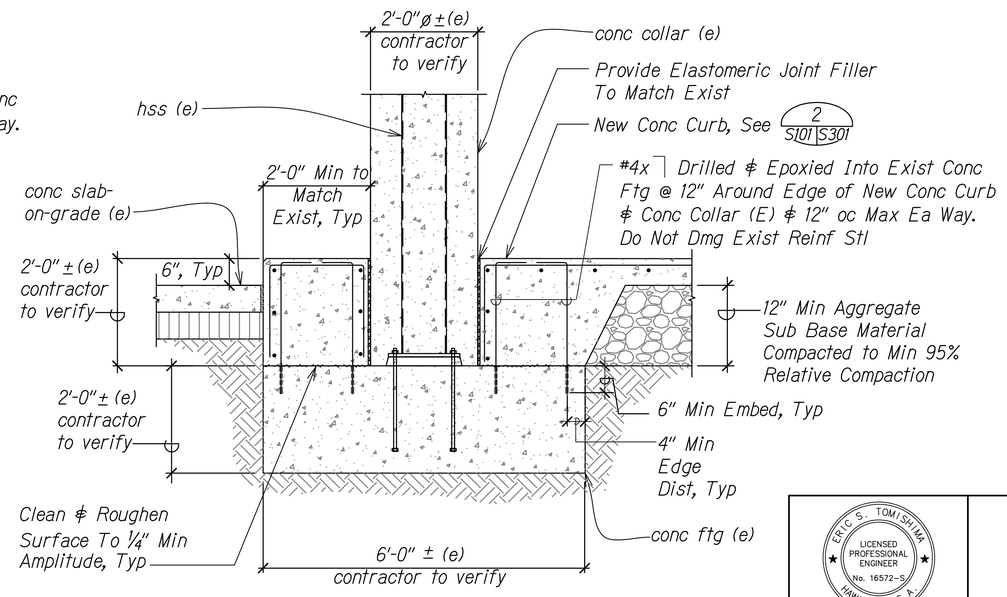

SECTION 4 S101 S301
Scale: 3/4"= 1'-0"

ORIGINAL PLAN	SURVEY PLOTTED BY	DATE
	DRAWN BY	
	TRACED BY	
NOTE BOOK	DESIGNED BY	
	QUANTITIES BY	
No.	CHECKED BY	

S:\MP KAHULUI BASEYARD_STRUCT.DWG 8/22/2022 10:07 PM

ERIC S. TOMISHIMA
LICENSED PROFESSIONAL ENGINEER
No. 16572-S
HAWAII U.S.A.

Expiration date of License: 4/30/24

THIS WORK WAS PREPARED BY ME OR UNDER MY SUPERVISION AND CONSTRUCTION OF THIS PROJECT WILL BE UNDER MY OBSERVATION

STATE OF HAWAII
DEPARTMENT OF TRANSPORTATION
HIGHWAYS DIVISION

SECTIONS

MAUI DISTRICT BASEYARD OFFICE EXPANSION & RENOVATION, PART 2
Project No. HWY-M-03-21, Phase 2
Scale: As Shown Date: July 2022

SHEET No. S301 OF 6 SHEETS