FED. ROAD DIST. NO.	STATE	PROJ. NO.	FISCAL YEAR	SHEET NO.	TOTAL SHEETS
HAWAII	HAW.	HWY-M-05-98	2002	64	99

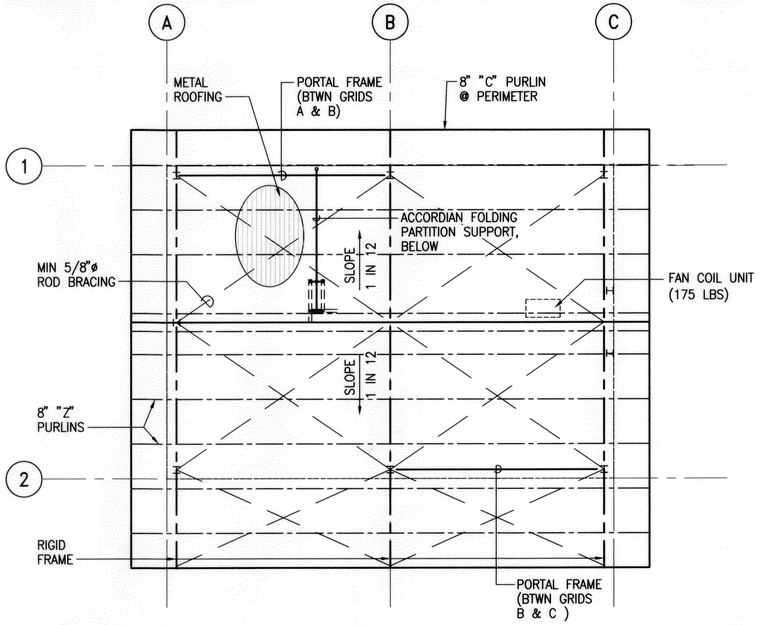

ROOF FRAMING PLAN

SCALE: 1/8"=1'-0"

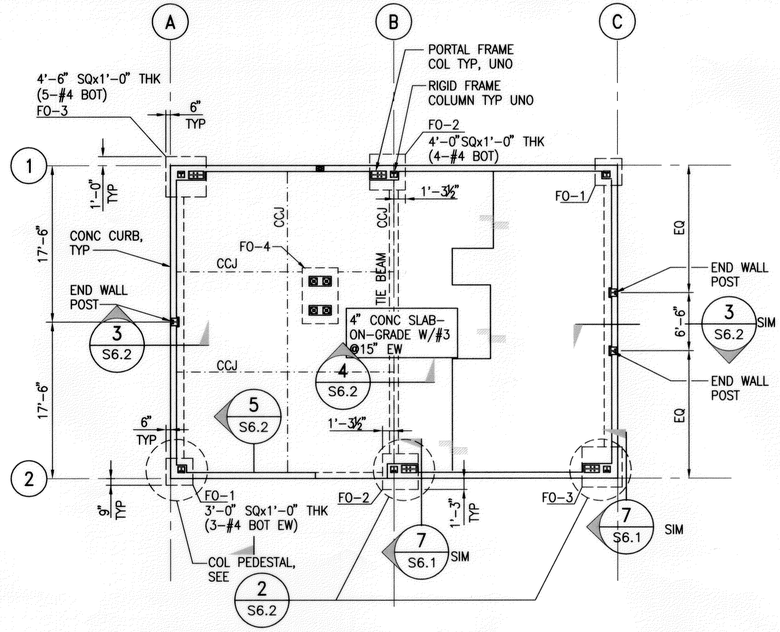

FOUNDATION PLAN

SCALE: 1/8"=1'-0"

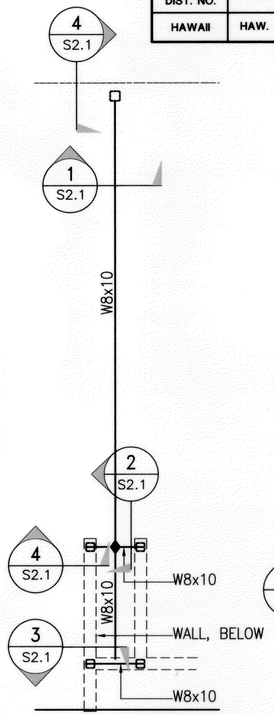

TOP PAN

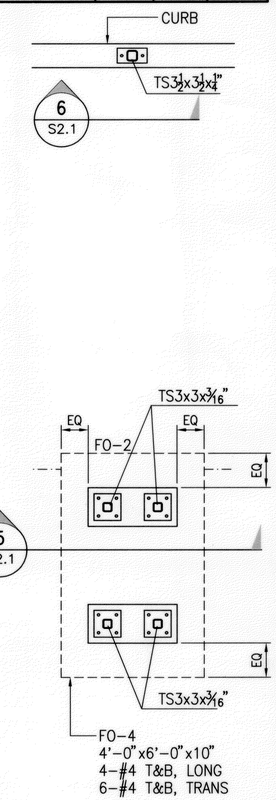

FOUNDATION PLAN

OFFICE BUILDING ACCORDIAN FOLDING PARTITION SUPPORT

SCALE: 1/2"=1'-0"

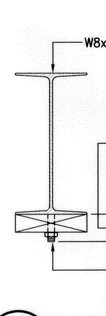

1 SECTION S2.1

SCALE: 3"=1'-0"

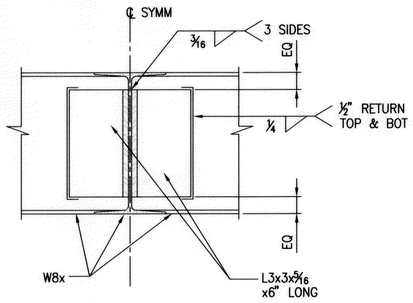

3 SECTION S2.1

SCALE: 3"=1'-0"

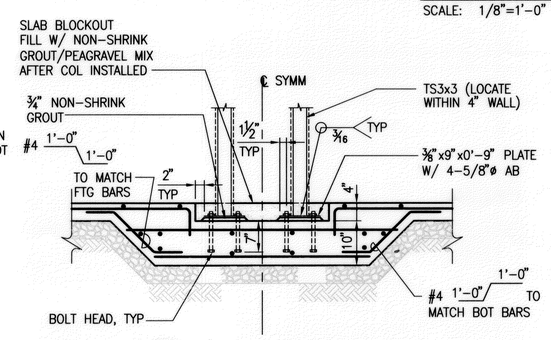

5 SECTION S2.1

SCALE: 3/4"=1'-0"

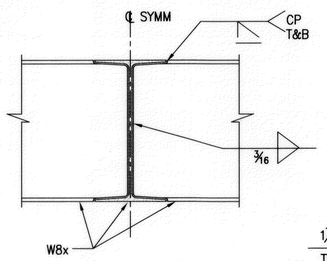

2 SECTION S2.1

SCALE: 3"=1'-0"

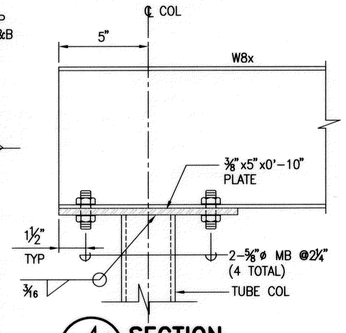

4 SECTION S2.1

SCALE: 3"=1'-0"

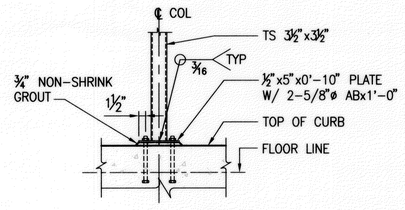

6 PARTIAL ELEVATION S2.1

SCALE: 3/4"=1'-0"

NOTES:

1. SEE S1.1 FOR GENERAL NOTES.
2. SEE S1.2 FOR TYPICAL FOUNDATION AND SLAB-ON-GRADE DETAILS.
3. INSTALL SLAB-ON-GRADE OVER VAPOR BARRIER OVER 4" THK LAYER OF 3B FINE CUSHION FILL, UNLESS NOTED OTHERWISE.
4. SEE S1.2 FOR REINFORCING BENDS, HOOKS AND SPLICES.
5. SEE S1.1 FOR "PRE-ENGINEERED BUILDING NOTES".
6. CCJ INDICATES CRACK CONTROL JOINTS IN SLAB-ON-GRADE, SEE DETAIL 6/S1.2. SUBMIT SHOP DRAWING OF PROPOSED JOINT LOCATIONS FOR ARCHITECTS APPROVAL WHEN NEW JOINT LOCATIONS DEVIATE FROM LOCATIONS SHOWN ON FOUNDATION PLAN.
7. SEE ARCHITECTURAL DRAWINGS FOR SLAB DEPRESSION AND RAISED RAISED CURBS, ETC.
8. LEGEND:
   FO-1 FOOTING MARK.
   ▶—— BEAM MOMENT CONN MARK
9. FOOTING AND PERIMETER CURBS SHALL BE CONSTRUCTED MONOLITHIC WITH SLAB.
10. BOTTOM OF FOOTINGS ~~SHALL BE~~ 2'-3" BELOW FINISH FLOOR Adjust 1'-0" to Obtain RFI 28 UNLESS NOTED OTHERWISE.
11. ANCHOR BOLT TO BE SET WITH TEMPLATES PROVIDED BY BUILDING MANUFACTURER.

GRAPHIC SCALE:

6" 4" 2" 0 6" — SCALE: 3"=1'-0"
1' 0 1' 2' 3' — SCALE: 3/4"=1'-0"
2' 0 2' 4' — SCALE: 1/2"=1'-0"
8' 0 8' 16' — SCALE: 1/8"=1'-0"

MYRON G. OKURO LICENSED PROFESSIONAL ENGINEER No. 4320-S HAWAII, U.S.A.

THIS WORK WAS PREPARED BY ME OR UNDER MY SUPERVISION

Myron Okuro

N

OFFICE BUILDING

STATE OF HAWAII
DEPARTMENT OF TRANSPORTATION
HIGHWAYS DIVISION

ROOF FRAMING PLAN & FOUNDATION PLAN

MOLOKAI BASEYARD
MOLOKAI INDUSTRIAL PARK
Project No. HWY-M-05-98

Scale: As Noted — Date: SEPT. 13, 2001

SHEET No. S2.1 OF S2.1 SHEETS

ORIGINAL PLAN	SURVEY PLOTTED BY	DATE
	DRAWN BY	
	TRACED BY	
NOTEBOOK	DESIGNED BY	
	QUANTITIES BY	
No.	CHECKED BY	

6143S12.DWG 08:23 04/03/00 M:\DWG\6143-01\STRUCT

"AS-BUILT"

tool\6143-01\struct\6143s12.dwg, 10/17/2001 02:09:42 PM