FED. ROAD DIST. NO.	STATE	PROJ. NO.	FISCAL YEAR	SHEET NO.	TOTAL SHEETS
HAWAII	HAW.	HWY-M-01-92M	1992	4	7

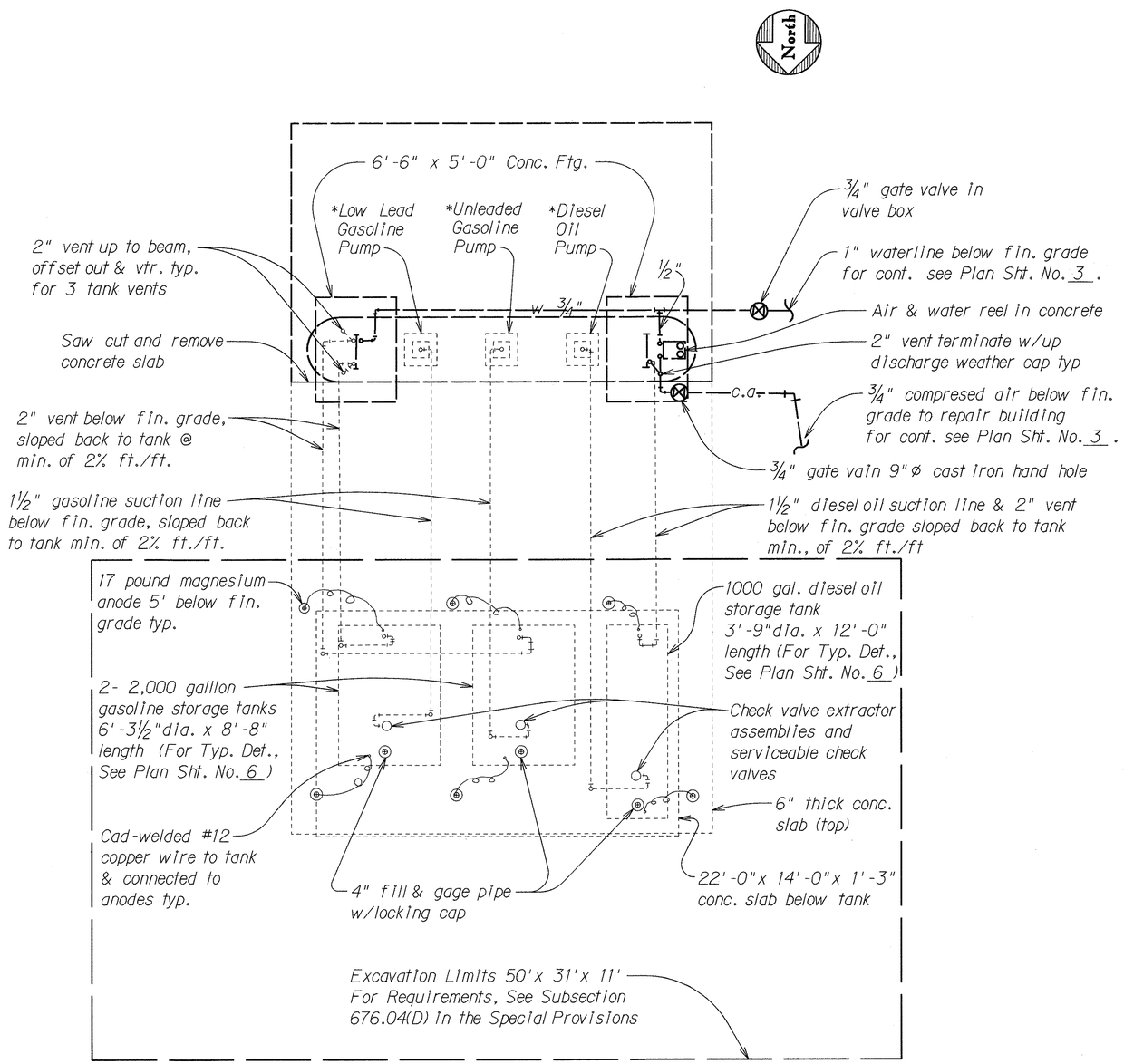

EXISTING GAS STATION PIPING PLAN

Scale: ¼" =1'-0"

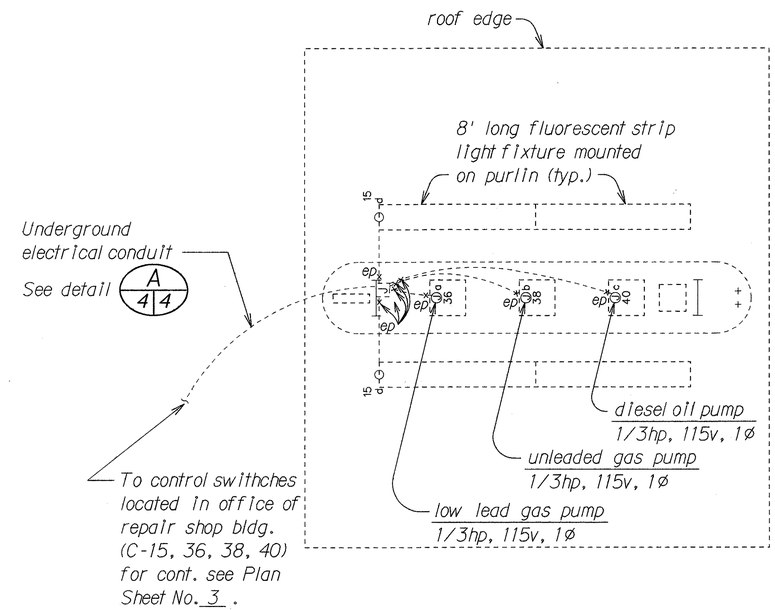

EXISTING GAS STATION ELECTRICAL PLAN

Scale: ¼" =1'-0"

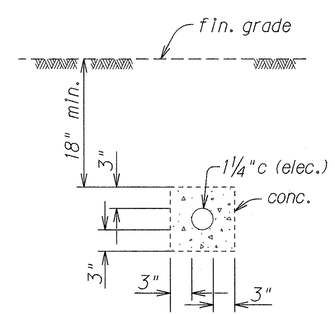

DETAIL A 4 4

Not To Scale

Legend

- —— —— Excavation Limits
- ——— To Remain
- -------- To be removed
- * To be removed and salvaged

ORIGINAL PLAN	SURVEY PLOTTED BY	DATE
	DRAWN BY	
NOTE BOOK	TRACED BY	
	DESIGNED BY	
	QUANTITIES BY	
No.	CHECKED BY	

STATE OF HAWAII
DEPARTMENT OF TRANSPORTATION
HIGHWAYS DIVISION

EXISTING UNDERGROUND FUEL TANKS

REPLACEMENT OF UNDERGROUND FUEL STORAGE TANKS AT VARIOUS LOCATIONS

PROJECT NO. HWY-M-01-92M

Scale: As Shown Date: April, 1992

SHEET No. 1 OF 1 SHEETS

2misdftl.dgn 5/28/92