FED. ROAD DIST. NO.	STATE	PROJ. NO.	FISCAL YEAR	SHEET NO.	TOTAL SHEETS
HAWAII	HAW.	HWY-M-ART18-01	2022	38	80

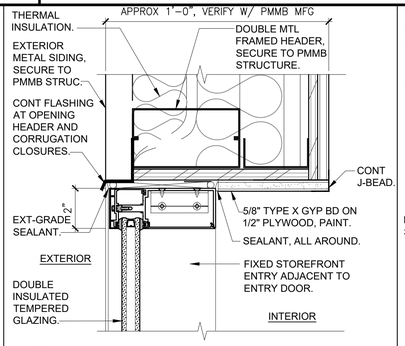

15 DET - HEAD-FIXED WDW

SCALE: 3" = 1'-0" 0 3" 6"

NOTE: COORD W/ PMMB MFG.

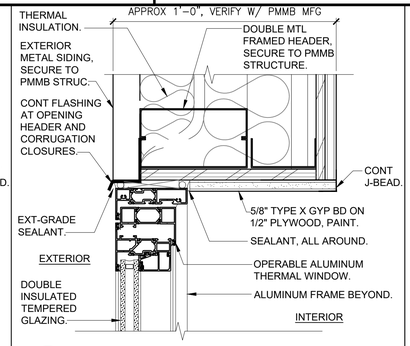

11 DET - HEAD-OPERABLE WDW

SCALE: 3" = 1'-0" 0 3" 6"

NOTE: COORD W/ PMMB MFG.

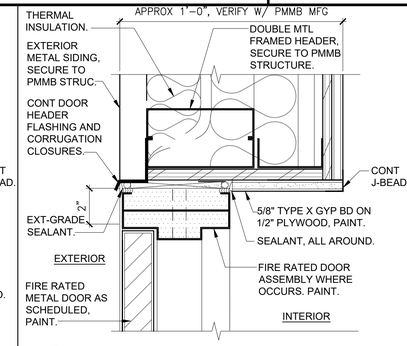

7 DETAIL - HEAD

SCALE: 3" = 1'-0" 0 3" 6"

NOTE: COORD W/ PMMB MFG.

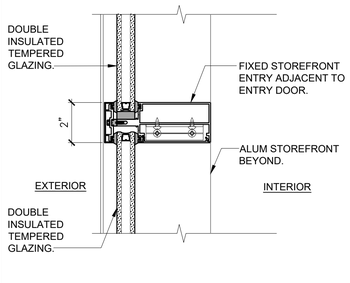

16 DETAIL - MULLION

SCALE: 3" = 1'-0" 0 3" 6"

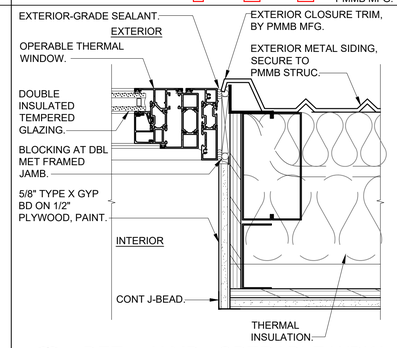

12 DET - JAMB - OPERABLE WDW

SCALE: 3" = 1'-0" 0 3" 6"

NOTE: COORD W/ PMMB MFG.

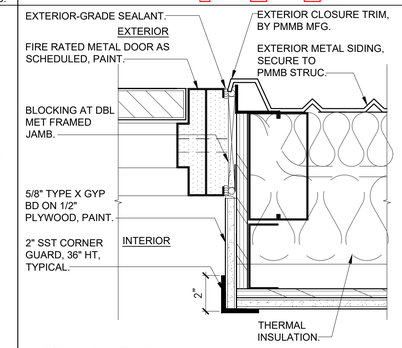

8 DETAIL - JAMB

SCALE: 3" = 1'-0" 0 3" 6"

NOTE: COORD W/ PMMB MFG.

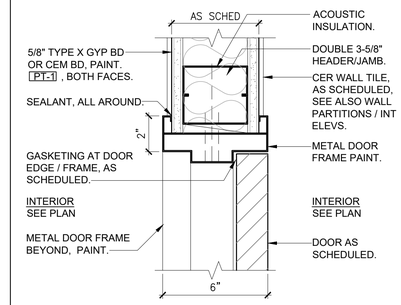

4 DETAIL - HEAD / JAMB

SCALE: 3" = 1'-0" 0 3" 6"

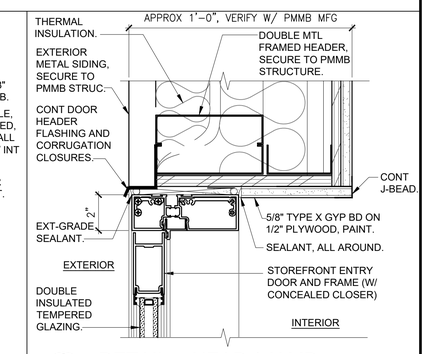

1 DETAIL - HEAD / JAMB

SCALE: 3" = 1'-0" 0 3" 6"

NOTE: COORD W/ PMMB MFG.

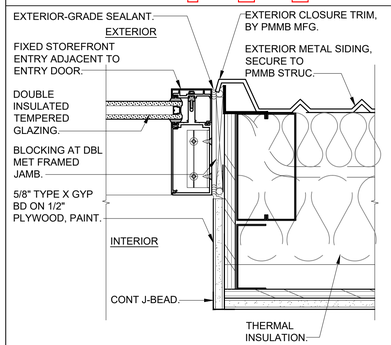

17 DET - JAMB - FIXED WDW

SCALE: 3" = 1'-0" 0 3" 6"

NOTE: COORD W/ PMMB MFG.

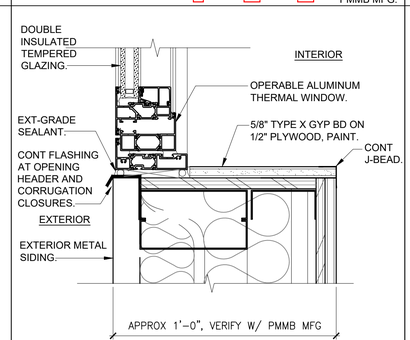

13 DET - SILL-OPERABLE WDW

SCALE: 3" = 1'-0" 0 3" 6"

NOTE: COORD W/ PMMB MFG.

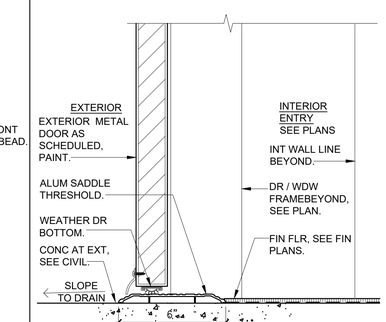

9 DETAIL - THRESHOLD

SCALE: 3" = 1'-0" 0 3" 6"

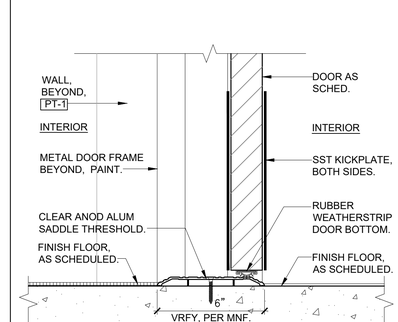

5 DETAIL - JAMB

SCALE: 3" = 1'-0" 0 3" 6"

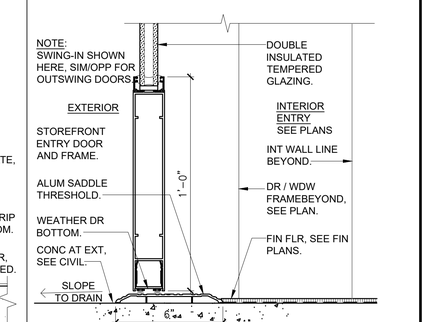

2 DETAIL - THRESHOLD

SCALE: 3" = 1'-0" 0 3" 6"

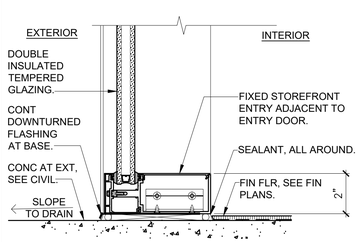

18 DET - SILL - FIXED WDW

SCALE: 3" = 1'-0" 0 3" 6"

REID T. MIZUE
LICENSED PROFESSIONAL ARCHITECT
No. 13108
HAWAII, U.S.A.

This work was prepared by me or under my supervision and construction of the project will be under my observation. Expiration date 04/30/24.

STATE OF HAWAII
DEPARTMENT OF TRANSPORTATION
HIGHWAYS DIVISION

DOOR AND WINDOW DETAILS

MAUI DISTRICT BASEYARD
Project No. HWY-M-ART18.01

Scale: AS SHOWN Date: MAY 2022

SHEET No. A24 OF 80 SHEETS

DATE	USER
SURVEY PLOTTED BY	
DRAWN BY	
TRACED BY	
TYPICAL DETAILS BY	
QUANTITIES BY	
CHECKED BY	
ORIGINAL PLANS	
NOTE BOOK	
No.	