FED. ROAD DIST. NO.	STATE	FED. AID PROJ. NO.	FISCAL YEAR	SHEET NO.	TOTAL SHEETS
HAWAII	HAW.	STP-0583(002)	2011	24	27

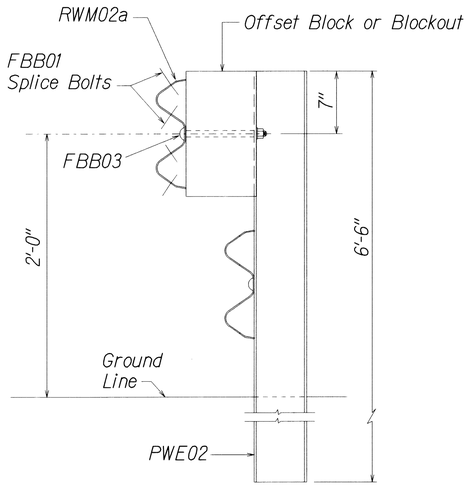

ELEVATION

STRONG POST RUBRAIL
(W-BEAM) GUARDRAIL

NOTE:
All Holes are 3/4" Dia.

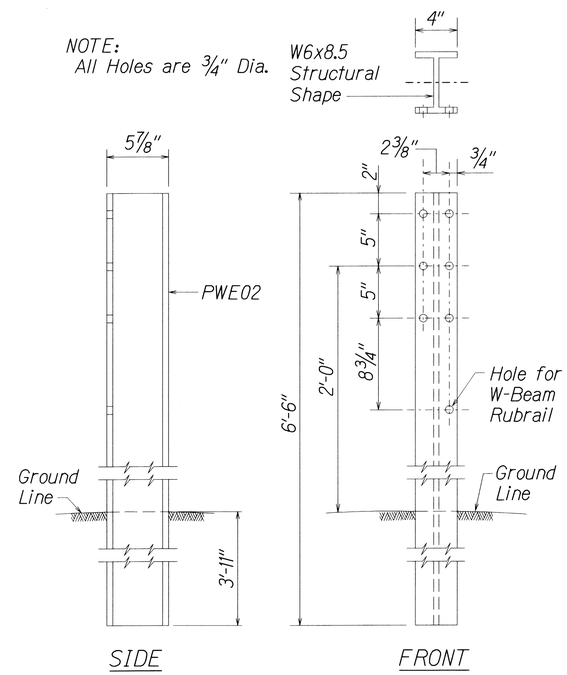

SIDE FRONT

W-BEAM STRONG POST (PWE02)

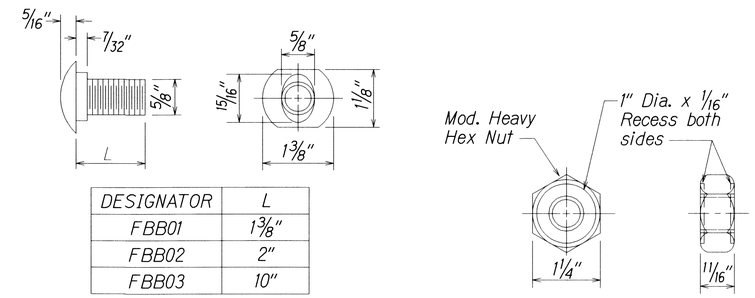

DESIGNATOR	L
FBB01	1 3/8"
FBB02	2"
FBB03	10"

GUARDRAIL BOLTS AND RECESSED NUT

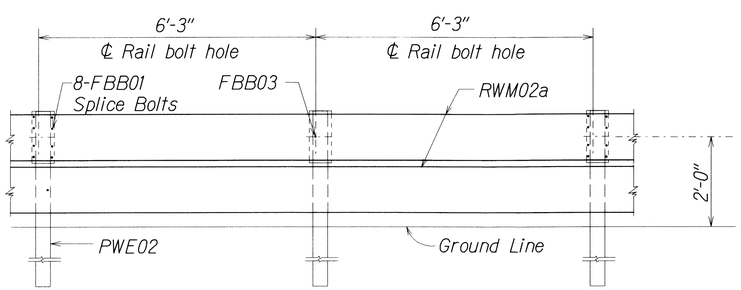

ELEVATION

STRONG POST RUBRAIL (W-BEAM) GUARDRAIL WITH
RECYCLED OFFSET BLOCK OR PLASTIC BLOCKOUT

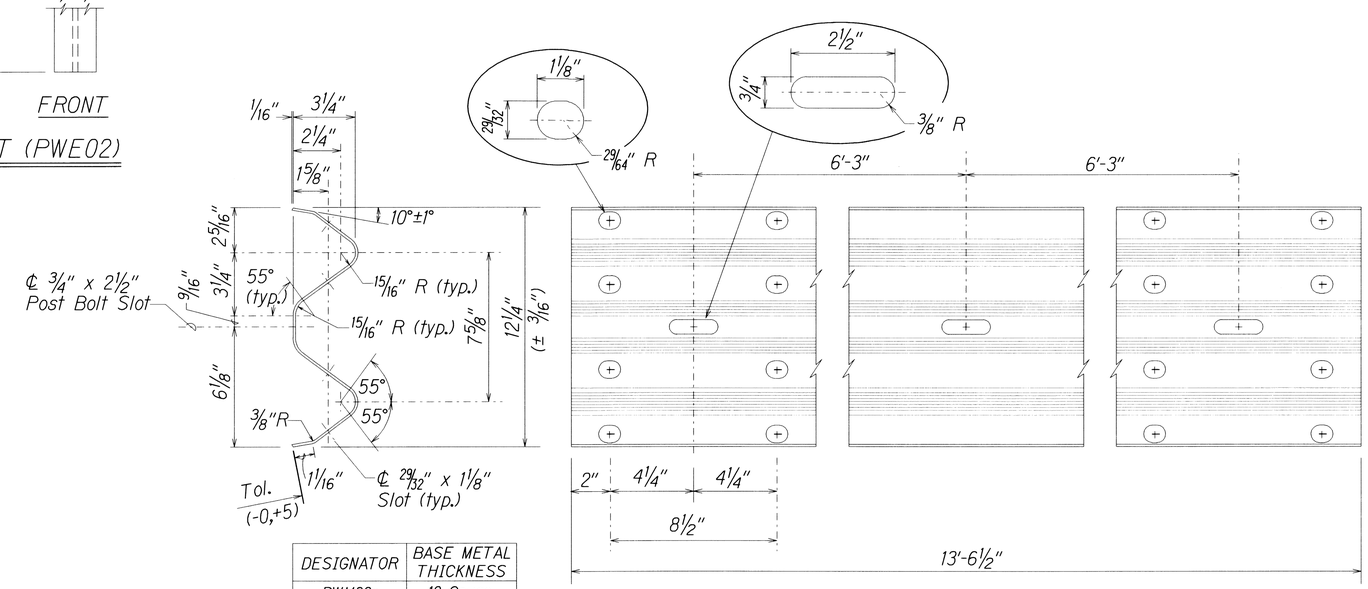

DESIGNATOR	BASE METAL THICKNESS
RWM02a	12 Gauge

2 SPACE W-BEAM GUARDRAIL (RWM02a)

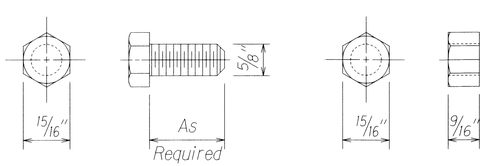

HEX BOLT & NUT (FBX16a)

ORIGINAL PLAN	SURVEY PLOTTED BY	DATE
	DRAWN BY	
	TRACED BY	
NOTE BOOK	DESIGNED BY	
N.	QUANTITIES BY	
	CHECKED BY	

rlr:0i:05 rdr:ruby:guardrail:rubraildgn (standard plan TE-52 rlr:03:89)

STATE OF HAWAII
DEPARTMENT OF TRANSPORTATION
HIGHWAYS DIVISION

STRONG POST RUBRAIL
(W-BEAM) GUARDRAIL

MAALO ROAD
GUARDRAIL AND SHOULDER IMPROVEMENTS
Mile Post 0.0 to Mile Post 2.95
Fed-Aid Project No. STP-0583(002)

Scale: Not to Scale Date: Dec. 2011

SHEET No. 6 OF 8 SHEETS