FED. ROAD DIST. NO.	STATE	PROJ. NO.	FISCAL YEAR	SHEET NO.	TOTAL SHEETS
HAWAII	HAW.	580A-01-07M	2007	6	17

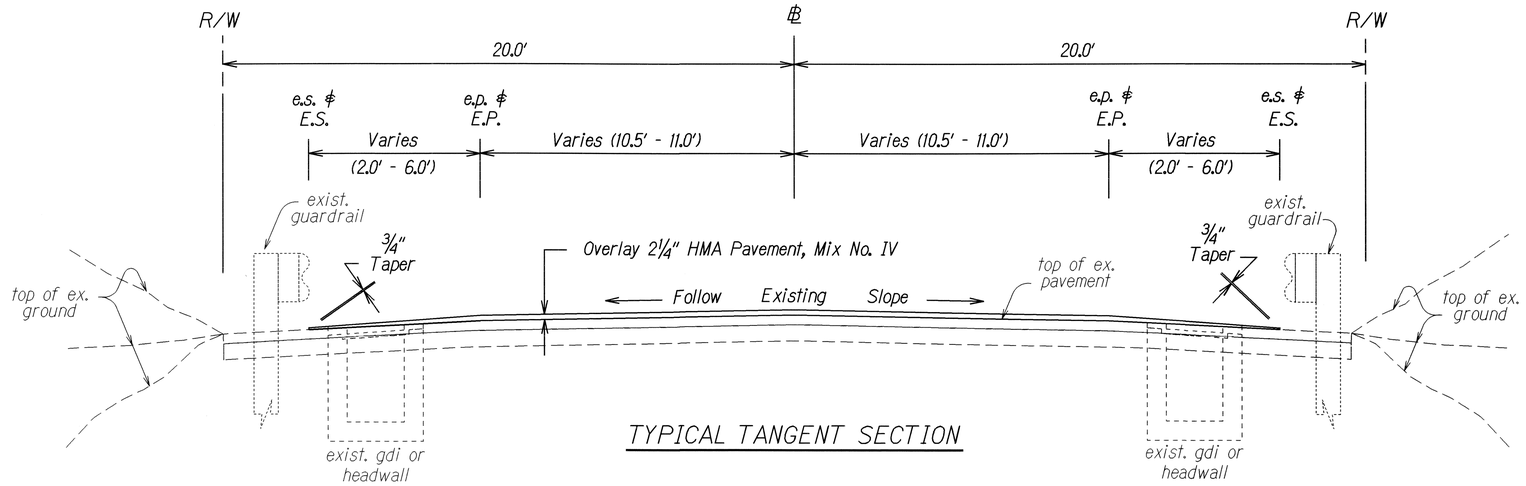

TYPICAL TANGENT SECTION

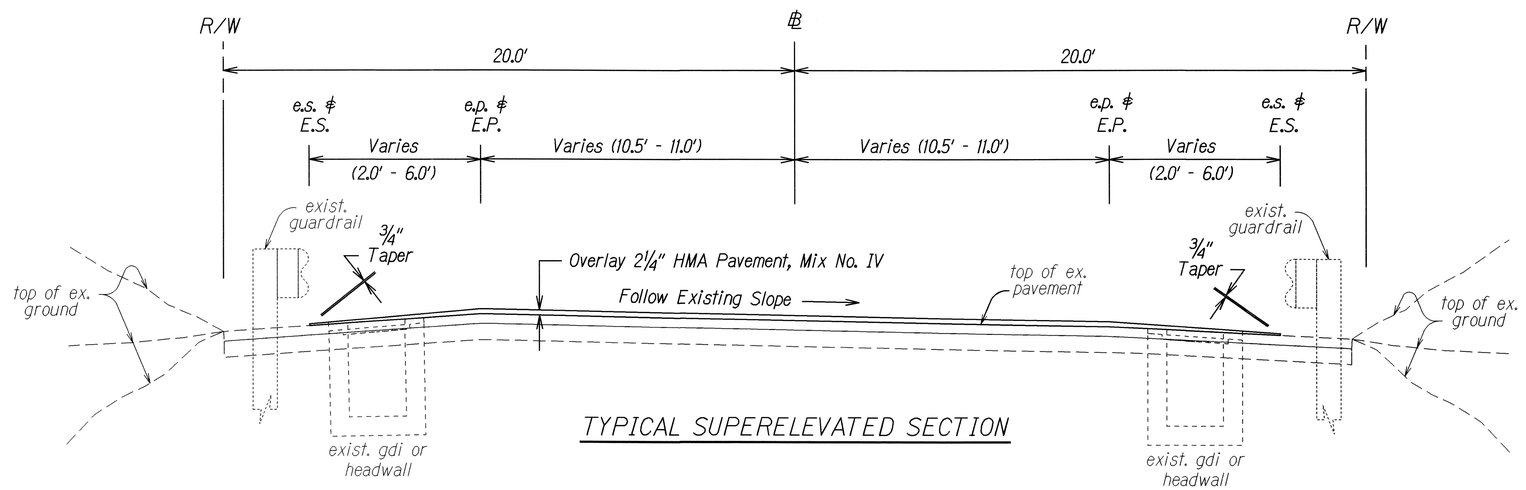

TYPICAL SUPERELEVATED SECTION

NOTES:

1. For Existing Guardrails and Grated Drop Inlets Locations, See Roadway Plans.
2. The 2 1/4-Inch Overlay Shall Be Tapered to 3/4-Inch To The Guardrail Face Or To The Right-of-Way At Driveways Except At Opaekaa Falls Lookout. See Detail Below.
3. Tapers to GDI:
   Transverse - From E.P.
   Longitudinal - 10 feet before and after Headwall

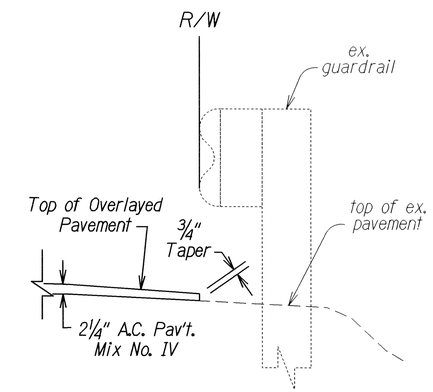

TRANSITION AT GUARDRAILS AND DRIVEWAYS

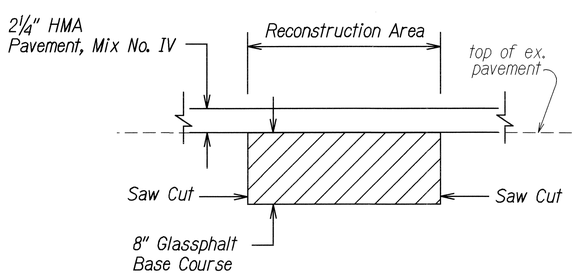

RECONSTRUCTION DETAIL

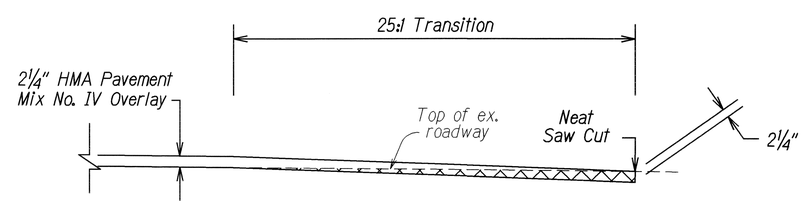

TRANSITION AT BEGIN ∢ END of PROJECT

REDUCED PLAN
(HALF SIZE)
0 1 2 3
3 INCHES ON ORIGINAL PLAN

STATE OF HAWAII
DEPARTMENT OF TRANSPORTATION
HIGHWAYS DIVISION

TYPICAL SECTION and DETAILS

KUAMOO ROAD RESURFACING
KUHIO HIGHWAY TO LILIA PLACE
PROJECT NO. 580A-01-07M

Not To Scale — Date: April, 2007

SHEET No. 1 OF 1 SHEETS

ORIGINAL PLAN	SURVEY PLOTTED BY	DATE 03/29/07
	DRAWN BY MM	
	TRACED BY	
NOTE BOOK	DESIGNED BY MQ	03/07/07
	QUANTITIES BY	
N.	CHECKED BY	