FED. ROAD DIST. NO.	STATE	FED. AID PROJ. NO.	FISCAL YEAR	SHEET NO.	TOTAL SHEETS
HAWAII	HAW.	STP-0560(017)	2023	ADD. 4	92

GENERAL NOTES (Cont.):

26. The exact locations and limits or areas to be excavated, reconstructed and cold planed shall be determined in the field by the Engineer.

27. All asphalt concrete materials from cold planing, reconstruction and roadway excavation operations shall become property of the Contractor. The Contractor shall remove and dispose these materials and shall be considered incidental to various contract items. The Contractor shall provide the Solid Waste Disclosure notice to the HDOT Engineer.

28. At the end of each day's paving operations, temporary pavement markers and striping shall be in place prior to leaving the site.

29. After completion of resurfacing, the Contractor and the Engineer will test for and determine ponding areas (i.e. low spots within the resurfaced area). It shall be the responsibility of the Contractor to correct and resurface and/or repair all such ponding areas at no cost to the State.

30. Removal and disposal of asphalt concrete curb, concrete curb, sidewalk, traffic signs, pavement marking and striping shall be considered incidental to various contract items and shall not be paid for separately.

31. Furnishing and installation of reinforcing bars, epoxy grout, premolded joint filler with sealant and bed course materials shall be considered incidental to Item 634.0100 - Portland Cement Concrete Sidewalk and shall not be paid for separately.

32. All existing Rectangular Rapid-Flashing Beacon (RRFB) assemblies in the project limits shall be removed and returned to the State Highways Division.

33. After completion of the work, the Contractor shall submit the complete set of "as-built" plans to the Engineer.

34. All new guardrail shall be Manual for Assessing Safety Hardware (MASH) compliant unless noted otherwise

35. Guardrail Paint:

a. Contractor shall shop coat all members. Field coating shall be for existing guardrail and post, and of touch up only. △1

b. Color for top coat shall be brown color as approved by the Engineer. Intermediate coat shall have a contrasting light color. Finish top coat shall not be gloss or high gloss.

c. See special coating options in the schedule below.

LEGEND:

- New PMA Pavement Areas
- Demolished & Removed A.C. Pavement Areas
- Pavement Reconstruction Areas
- Cold-Planing & Resurfacing Limits
- HFST Application Areas
- New Conc. Pedestrian Path
- up — Existing Utility Pole
- elec — Existing Electrical Pullbox
- catv — Existing Cable/TV Pullbox
- tpb — Existing Telephone Pullbox
- sl — Existing Street Light
- lp — Existing Lamp Pole
- wv — Existing Water Valve Box
- wm — Existing Water Meter Box
- sign — Existing Traffic Sign
- New Traffic Sign
- New Reflective Marker (RM-3) w/ Post
- New Object Marker (OM2-2H)
- Existing Metal Guardrail
- New Metal Guardrail
- fh — Existing Fire Hydrant
- smh — Existing Sewer Manhole
- co — Existing Sewer Cleanout
- sdmh — Existing Storm Drain Manhole
- gdi — Existing Grated Drop Inlet
- 6.58 — Existing Ground Elevation
- 6.57 — Finished Grade Elevation

ABBREVIATIONS:

AC	ASPHALT CONCRETE
ACB	HOT MIX ASPHALT-TREATED BASE COURSE
ADA	AMERICANS WITH DISABILITIES ACT
ARV	AIR RELEASE VALVE
AVE	AVENUE
℄	BASELINE
BC	BOTTOM CURB
BFP	BACK FLOW PREVENTER
BMP	BEST MANAGEMENT PRACTICES
BW	BOTTOM WALL
℄	CENTERLINE
CATV	CABLE/TELEVISION
CB	CATCH BASIN
CD	CONDUIT
CLF	CHAIN LINK FENCE
CMU	CONCRETE MASONRY UNIT
CONC	CONCRETE
CRM	CONCRETE RUBBLE MASONRY
CY	CUBIC YARD
D	DIAMETER OR DRAIN
DI	DRAIN INLET
DOT	STATE OF HAWAII DEPARTMENT OF TRANSPORTATION
DS	DOWN SPOUT
ELEC	ELECTRIC
ELEV	ELEVATION
ep	EXISTING EDGE OF PAVEMENT
EP	NEW EDGE OF PAVEMENT
es	EXISTING EDGE OF SHOULDER
ES	NEW EDGE OF SHOULDER
FH	FIRE HYDRANT
GDI	GRATED DROP INLET
GW	GUY WIRE
H	HEIGHT
HFST	HIGH FRICTION SURFACE TREATMENT
HMA	HOT MIX ASPHALT
HWY	HIGHWAY
ICV	IRRIGATION CONTROL VALVE
INV	INVERT
LF	LINEAR FEET
LP	LAMP POLE
Lt.	LEFT
MASH	MANUAL FOR ASSESSING SAFETY HARDWARE
MH	MANHOLE
NTS	NOT TO SCALE
O/H	OVERHEAD ELECTRICAL
o/s	OFFSET
OM	OBJECT MARKER
PBX	PANEL BOX
PCCP	PORTLAND CEMENT CONCRETE PAVEMENT
PMA	POLYMER-MODIFIED ASPHALT
PVMT	PAVEMENT
R	RADIUS
RD	ROAD
REF	REFLECTOR
RM	REFLECTOR MARKER
RPM	RAISED PAVEMENT MARKING
RRFB	RECTANGULAR RAPID FLASHING BEACON
Rt.	RIGHT
R/W	RIGHT-OF-WAY
SDMH	STORM DRAIN MANHOLE
S.E.	SUPERELEVATION
SF	SQUARE FEET
SHT	SHEET
SL	STREET LIGHT
SPR	SPRINKLER
SR	STATE ROUTE
ST	STREET
STA.	STATION
STD	STANDARD
T	TANGENT
TC	TOP CURB
TEL	TELEPHONE
TP	TOP PIPE
TS	TOP STEM
TW	TOP WALL
TYP.	TYPICAL
U/G	UNDERGROUND
UP	UTILITY POLE
W	WATER
WM	WATER METER
WV	WATER VALVE

SPECIAL COATING SCHEDULE FOR ZINC COATED METAL BEAMS AND POSTS

	Option #1	Option #2	Option #3	Option #4
Preparation	Carboline Thinner #2 or Surface Cleaner #3 per SSPC-SP1, Apply Rustbound Penetrating Sealer	Solvent Clean per SSPC-SP1, Apply Sealer 513-V-110	Solvent Clean per SSPC-SP1 and as Recommended by the Manufacturer	Solvent Clean per SSPC-SP1, Apply Galvaprep Zinc Treatment
1st Coat:	Carboline 890 Epoxy DFT 5 mil (min.) WFT 7 mil (min.)	Valspar VyGuard V75 Epoxy DFT 5 mil (min.) WFT 7 mil (min.)	Sherman Williams Tile Clad High Solids B62 Series DFT 4 mil (min.) WFT 7 mil (min.)	PPG Amerlock 600 Epoxy △1 DFT 5 mil (min.) WFT 8 mil (min.)
Re-Coating Time:	8 Hrs. (min.) 2 Days (min.)	36 Hrs. (min.) 14 Days (min.)	8 Hrs. (min.) 10 Days (min.)	8 Hrs. (min.) 4 Days (min.) △1
Top Coat:	Carboline 133HB Alyphatic Polyurethane DFT 5 mil (min.) WFT 7 mil (min.)	Valspar VyGuard V41 Series DFT 4 mil (min.) WFT 7 mil (min.)	Sherman Williams Corothane II B65 W200 Series / B60V2 DFT 4 mil (min.) WFT 7 mil (min.)	PPG Pitthane Ultra LS △1 Polyurethane DFT 4 mil (min.) WFT 7 mil (min.)

DATE	REVISION
10/12/23	△1 - Revised Paint Notes

SCOTT A. KUNIOKA
LICENSED PROFESSIONAL ENGINEER
No. 7257-C
HAWAII, U.S.A.
LICENSE EXPIRES 4/30/24
THIS WORK WAS PREPARED BY ME OR UNDER MY SUPERVISION LICENSE EXPIRES 4/30/24

STATE OF HAWAII
DEPARTMENT OF TRANSPORTATION
HIGHWAYS DIVISION

GENERAL NOTES, LEGEND & ABBREVIATIONS

KUHIO HIGHWAY RESURFACING AND SAFETY IMPROVEMENTS
Route 560 M.P. 0.0 to M.P. 4.5
Fed. Aid Proj. No. STP-0560(017)

Scale: None Date: July, 2023

SHEET No. N-3A OF 6 SHEETS

ORIGINAL PLAN | NOTE BOOK No. | SURVEY PLOTTED BY | DRAWN BY | TRACED BY | DESIGNED BY | QUANTITIES BY | CHECKED BY | DATE

ADD. 4

FED. ROAD DIST. NO.	STATE	FED. AID PROJ. NO.	FISCAL YEAR	SHEET NO.	TOTAL SHEETS
HAWAII	HAW.	STP-0560(017)	2023	ADD.26	92

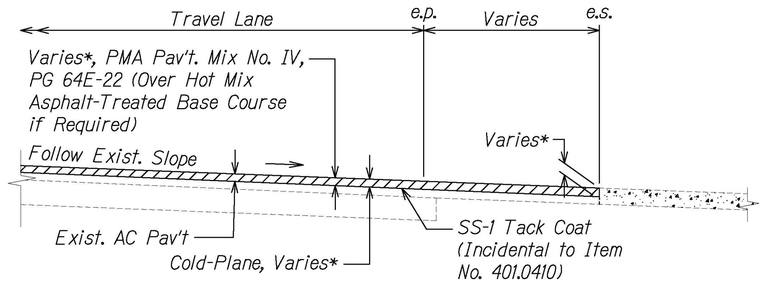

*See Table 1 on Sht R-1 for Cold Plane, Base Course, and Top Coat Depths and Materials.

RESURFACING AT CONCRETE DRIVEWAYS
Not to Scale

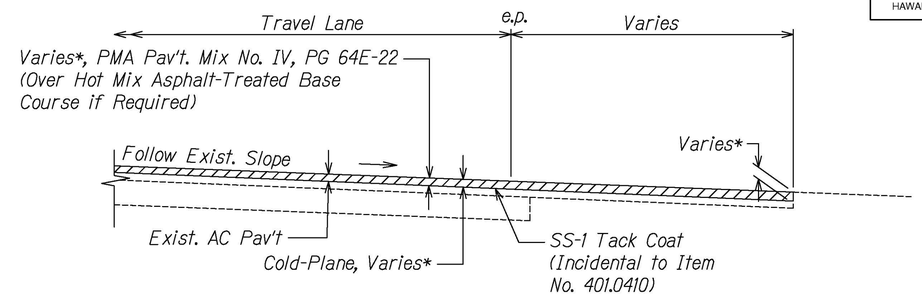

RESURFACING AT PAVED SIDEROADS/DRIVEWAYS
Not to Scale

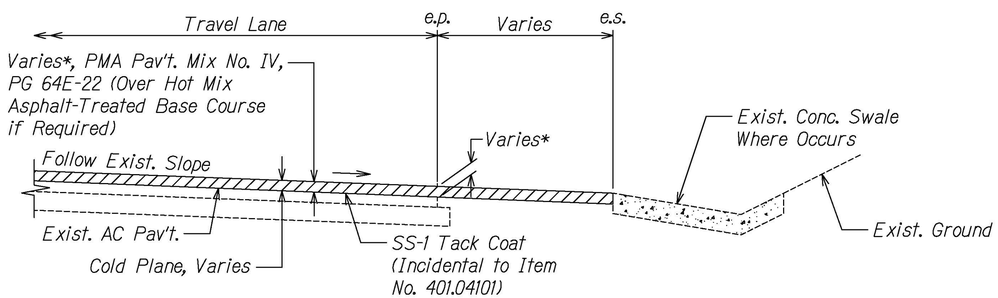

*See Table 1 on Sht R-1 for Cold Plane, Base Course, and Top Coat Depths and Materials.

RESURFACING AT CONCRETE OR ASPHALT SWALE
Not to Scale

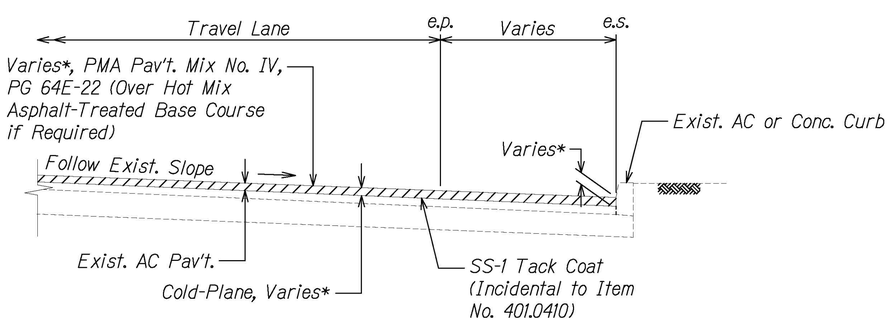

*See Table 1 on Sht R-1 for Cold Plane, Base Course, and Top Coat Depths and Materials.

RESURFACING AT CONCRETE OR ASPHALT CURB
Not to Scale

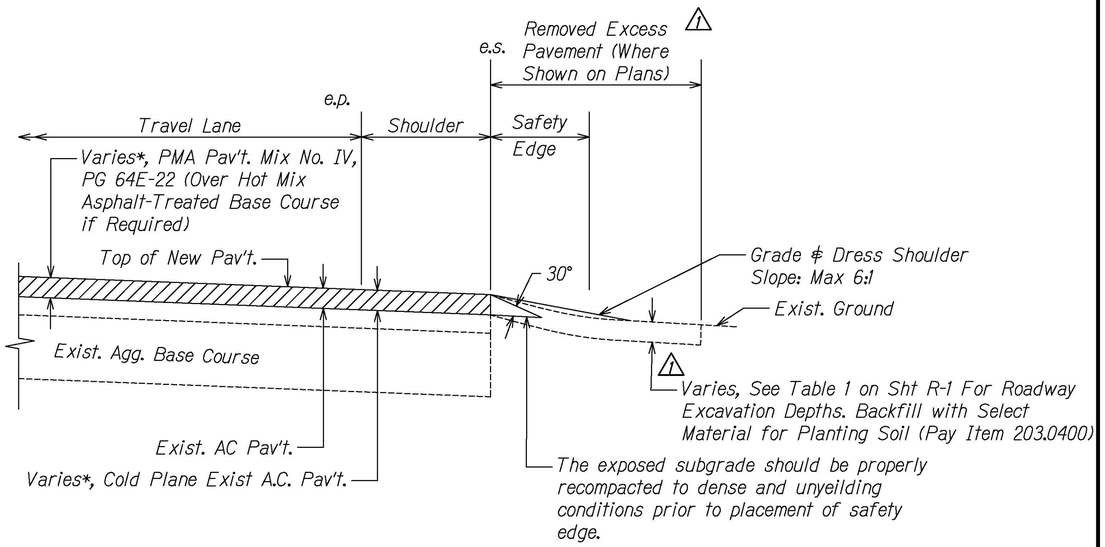

*See Table 1 on Sht R-1 for Cold Plane, Base Course, and Top Coat Depths and Materials.

Note:

1. Contractor shall mount a device directly on the paver screed extension to provide a 30° beveled shoulder edge.
2. Construct safety edge at all edges of a.c. pavement. This work shall be considered incidental to Item No. 401.0410 - PMA Pavement Mix No. IV.

TYPICAL PAVEMENT EDGE DETAIL
Not to Scale

DATE	REVISION
10/12/23	1 - Revised Typ. Pav't Edge Detail

SCOTT A. KUNODA
LICENSED PROFESSIONAL ENGINEER
No. 7257-C
HAWAII, U.S.A.
LICENSE EXPIRES 4/30/24
THIS WORK WAS PREPARED BY ME OR UNDER MY SUPERVISION LICENSE EXPIRES 4/30/24

STATE OF HAWAII
DEPARTMENT OF TRANSPORTATION
HIGHWAYS DIVISION

TYPICAL SECTIONS

KUHIO HIGHWAY RESURFACING AND SAFETY IMPROVEMENTS
Route 560 M.P. 0.0 to M.P. 4.5
Fed. Aid Proj. No. STP-0560(017)

Scale: Not to Scale Date: July, 2023

SHEET No. R-7A OF 28 SHEETS

ADD. 26

ORIGINAL PLAN | SURVEY PLOTTED BY | DRAWN BY | TRACED BY | DESIGNED BY | QUANTITIES BY | CHECKED BY | DATE
NOTE BOOK | ESTIMATED BY | REVIEWED BY | SHEET OF

FED. ROAD DIST. NO.	STATE	FED. AID PROJ. NO.	FISCAL YEAR	SHEET NO.	TOTAL SHEETS
HAWAII	HAW.	STP-0560(017)	2023	ADD.29	92

GENERAL NOTES:

1. All hardware, posts and fasteners shall be hot-dip zinc coated galvanized after fabrication. No punching, drillings or cutting will be permitted after galvanizing.
2. Where conditions require, special post lengths in increments of 6 inches may be specified by the Engineer.
3. All fasteners, posts, and rail elements (i.e. FBB03, PWE01, RWM04b, etc.) shall conform to the latest edition and amendments of "A Guide to Standardized Highway Barrier Rail Hardware", a report prepared and approved by the AASHTO-AGC-ARTBA Joint Cooperative Committee, Subcommittee on New Highway Materials, Task Force 13 Report. Dimensions of fasteners, posts, and rail elements have been converted from metric units into their present form.
4. The Blockout or Offset Block shall be approved by the State.
5. All new guardrail systems (system consists of total length of guardrail including both end treatments) shall include the Additional Paved Area.
6. After the guardrail posts are installed in the paved area, the Contractor shall fill/seal around each guardrail post and all cracks in the paved area caused during the guardrail post installation. If required by the inspector/engineer, the Contractor shall tamper the paved area around the guardrail post prior to filling/sealing. All costs associated with this work shall not be paid for separately, but shall be considered incidental to the various guardrail items.
7. When standards for the fill slope area cannot be met, a site specific, engineer approved design may be used.
8. Minimum working width (clear distance) between back of MGS post to any fixed object is 4'-1" (49").
9. New Hot Mix Asphalt (HMA) pavement at guardrails shall extend 6 feet longitudinally beyond terminal ends.
10. Reflector Markers (RM-5) mounted on guardrails shall be spaced every 25 feet. RM-5's shall not be installed on terminal sections. Furnishing and installing of each RM-5 shall be considered incidental to the guardrail system.
11. Polymer-Modified Asphalt (PMA) pavement shall be used in place of HMA when the adjacent roadway is paved with PMA.
12. All guardrail, guardrail posts and appurtenances (both new and existing) shall be painted in accordance to Note 35 Guardrail Paint on Sheet N-3. Payment for painting shall be considered incidental to the various guardrail items. Top coat paint color shall be brown and match existing guardrails.

GUARDRAIL TYPE	DIMENSION	
	H	A
MGS w/ Standard 8" Offset Block	2'-1"	1'-6"
MGS w/ No Blockout	2'-7/8"	9/4"

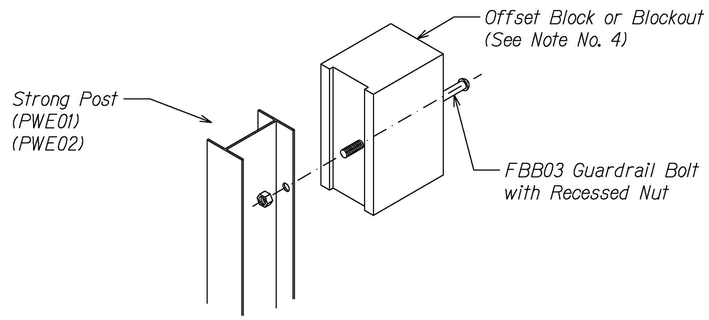

Exploded View
(Rail and washer not shown)

STEEL POST AND BLOCK DETAIL

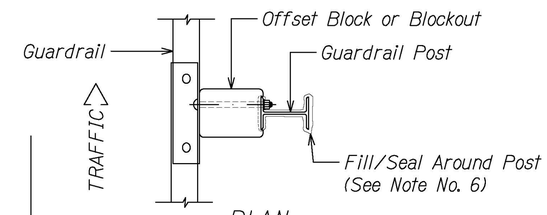

PLAN

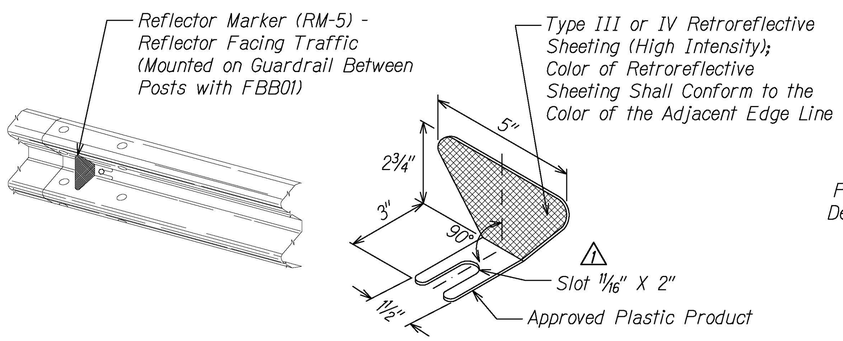

REFLECTOR MARKER (RM-5) DETAIL AND TYPICAL INSTALLATION

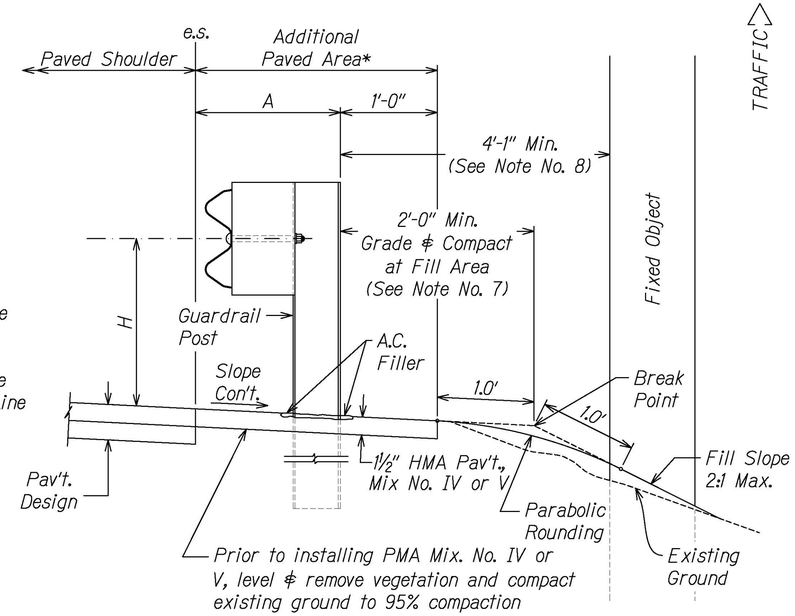

ELEVATION

TYPICAL GUARDRAIL INSTALLATION

DATE	REVISION
10/12/23	1 - Revised RM-5 Detail

SCOTT A. KUNOKA
LICENSED PROFESSIONAL ENGINEER
No. 7257-C
HAWAII, U.S.A.
LICENSE EXPIRES 4/30/24
THIS WORK WAS PREPARED BY ME OR UNDER MY SUPERVISION LICENSE EXPIRES 4/30/24

STATE OF HAWAII
DEPARTMENT OF TRANSPORTATION
HIGHWAYS DIVISION

GUARDRAIL DETAILS

KUHIO HIGHWAY RESURFACING AND SAFETY IMPROVEMENTS
Route 560 M.P. 0.0 to M.P. 4.5
Fed. Aid Proj. No. STP-0560(017)

Scale: Not to Scale Date: July, 2023

SHEET No. R-10A OF 28 SHEETS

ORIGINAL PLAN | NOTE BOOK | SURVEY PLOTTED BY | DRAWN BY | TRACED BY | DESIGNED BY | QUANTITIES BY | CHECKED BY | DATE

FED. ROAD DIST. NO.	STATE	FED. AID PROJ. NO.	FISCAL YEAR	SHEET NO.	TOTAL SHEETS
HAWAII	HAW.	STP-0560(017)	2023	ADD.30	92

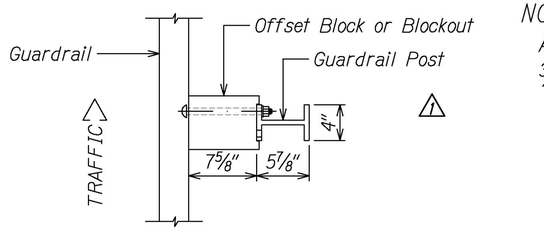

PLAN

NOTE:
All Holes are
¾ " Dia.

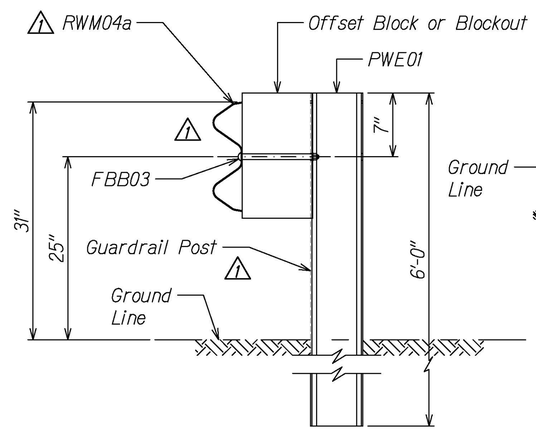

SECTION A-A (A 1|1)

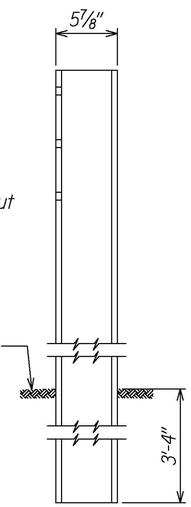

SIDE

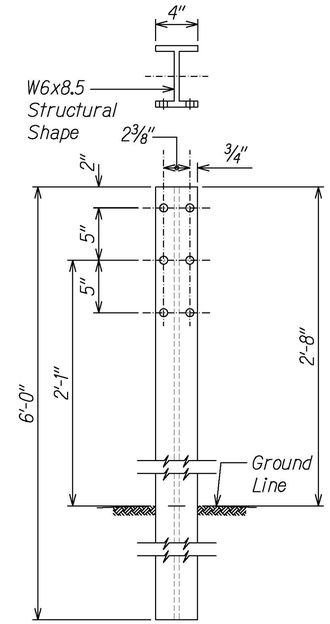

FRONT

WIDE-FLANGED GUARDRAIL POST (PWE01)

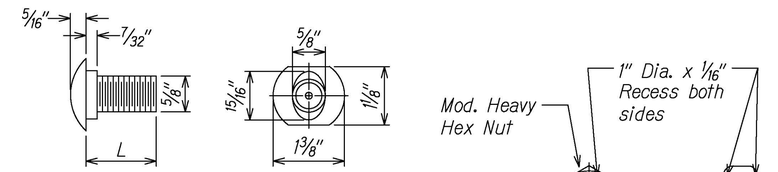

DESIGNATOR	L
FBB01	1⅜"
FBB02	2"
FBB03	10"

GUARDRAIL BOLTS AND RECESSED NUT

DESIGNATOR	BASE METAL THICKNESS
RWM04a	12 Gauge

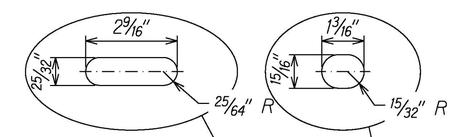

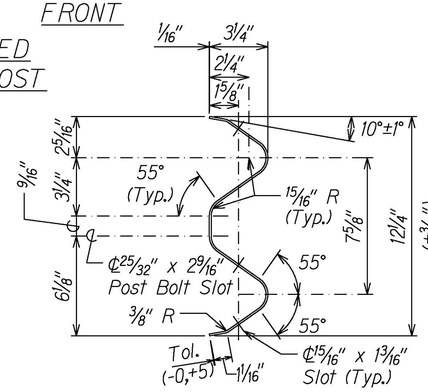

SECTION B-B (B 1|1)

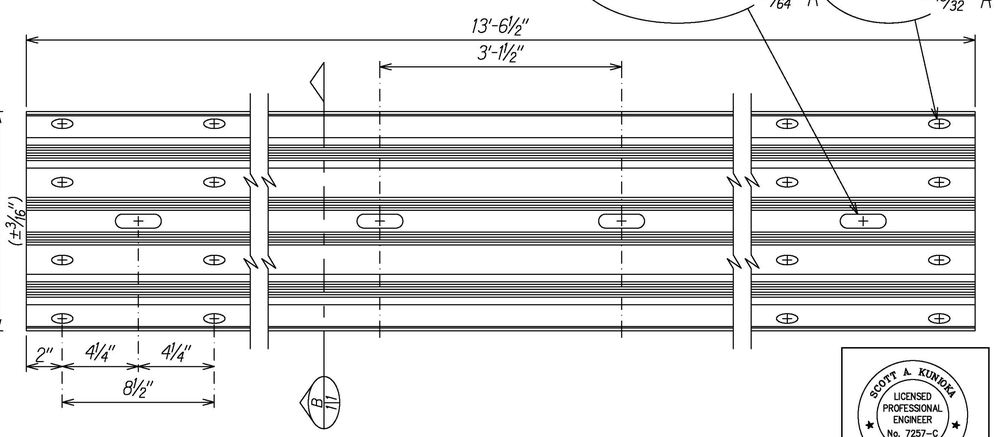

4 SPACE W-BEAM GUARDRAIL (RWM04a)

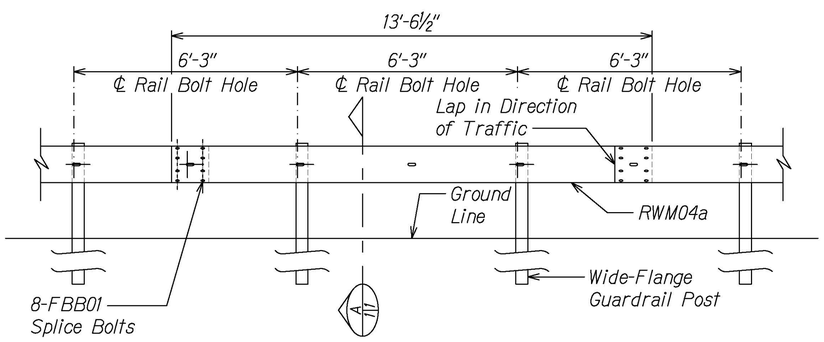

ELEVATION

MIDWEST GUARDRAIL SYSTEM WITH STANDARD 8" OFFSET BLOCK (SGR47)

SCOTT A. KUNIOKA
LICENSED PROFESSIONAL ENGINEER
No. 7257-C
HAWAII, U.S.A.
LICENSE EXPIRES 4/30/24

THIS WORK WAS PREPARED BY ME OR UNDER MY SUPERVISION LICENSE EXPIRES 4/30/24

STATE OF HAWAII
DEPARTMENT OF TRANSPORTATION
HIGHWAYS DIVISION

GUARDRAIL DETAILS

KUHIO HIGHWAY RESURFACING AND SAFETY IMPROVEMENTS
Route 560 M.P. 0.0 to M.P. 4.5
Fed. Aid Proj. No. STP-0560(017)

Scale: Not to Scale Date: July, 2023

DATE	REVISION
10/12/23	1 - Revised Guardrail Details

SHEET No. R-11A OF 28 SHEETS

ADD. 30

ORIGINAL PLAN | SURVEY PLOTTED BY | DRAWN BY | TRACED BY | DESIGNED BY | QUANTITIES BY | CHECKED BY | DATE | NOTE BOOK | No.

FED. ROAD DIST. NO.	STATE	FED. AID PROJ. NO.	FISCAL YEAR	SHEET NO.	TOTAL SHEETS
HAWAII	HAW.	STP-0560(017)	2023	ADD.32	92

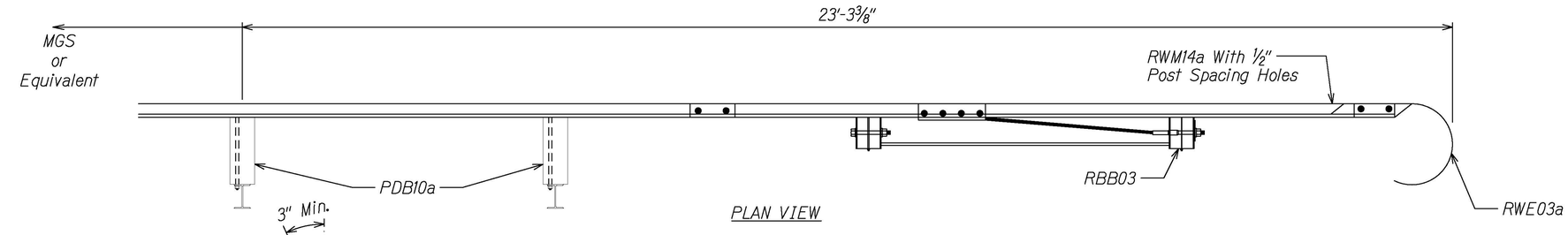

PLAN VIEW

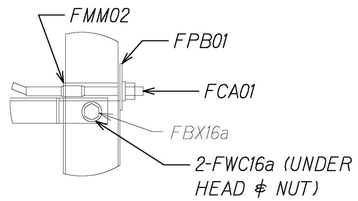

DETAIL A

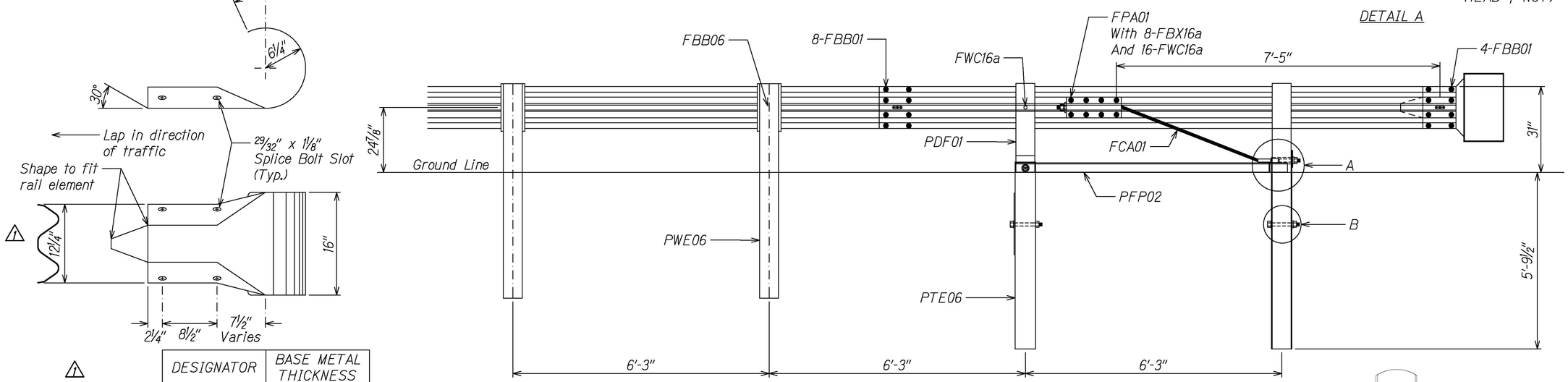

ELEVATION VIEW
NON TRAFFIC SIDE

DESIGNATOR	BASE METAL THICKNESS
RWE03a	12 Gauge

W-BEAM END SECTION (ROUNDED RWE03a)

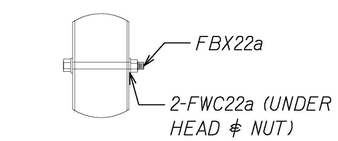

DETAIL B

ITEM NO.	QTY	COMPONENTS
FBB01	12	Guardrail Bolt and Nut
FBB03	2	Guardrail Bolt and Nut
FBB06	1	Guardrail Bolt and Nut
FBX16a	2	Hex Head Bolt (10") and Nut
FBX16a	8	Hex Head Bolt (1½") and Nut
FBX22a	2	Hex Head Bolt (7½") and Nut
FCA01	1	BCT Anchor Cable Assembly
PDB10a	2	MGS Timber Blockout
PFP02	1	Strut and Yoke Assembly
PWE06	1	Wide-Flange Guardrail Post
FMM02	1	BCT Post Sleeve
FPA01	1	Anchor Bracket Assembly
FPB01	1	BCT Bearing Plate
FWC16a	22	Circular Washer
FWC22a	4	Circular Washer
PDF01	2	BCT Timber Post
PTE06	2	Foundation Tube
RWE03a	1	W-Beam Rounded End Section
RWM14a	1	W-Beam MGS End Section

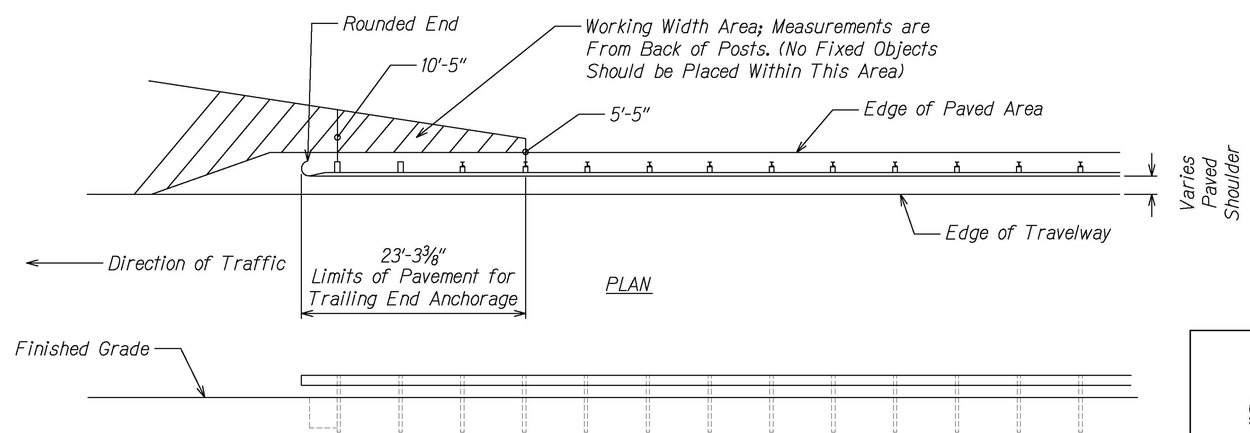

PLAN

ELEVATION

TRAILING-END ANCHORAGE SYSTEM DETAILS
Not to Scale

DATE	REVISION
10/12/23	- Revised Guardrail Details

SCOTT A. KUNIOKA
LICENSED PROFESSIONAL ENGINEER
No. 7257-C
HAWAII, U.S.A.
LICENSE EXPIRES 4/30/24
THIS WORK WAS PREPARED BY ME OR UNDER MY SUPERVISION LICENSE EXPIRES 4/30/24

STATE OF HAWAII
DEPARTMENT OF TRANSPORTATION
HIGHWAYS DIVISION

GUARDRAIL DETAILS

KUHIO HIGHWAY RESURFACING AND SAFETY IMPROVEMENTS
Route 560 M.P. 0.0 to M.P. 4.5
Fed. Aid Proj. No. STP-0560(017)

Scale: Not to Scale Date: July, 2023

SHEET No. R-13A OF 28 SHEETS

ADD. 32

SURVEY PLOTTED BY
DRAWN BY
TRACED BY
DESIGNED BY
QUANTITIES BY
CHECKED BY
DATE
ORIGINAL PLAN
NOTE BOOK

FED. ROAD DIST. NO.	STATE	FED. AID PROJ. NO.	FISCAL YEAR	SHEET NO.	TOTAL SHEETS
HAWAII	HAW.	STP-0560(017)	2023	ADD.37	92

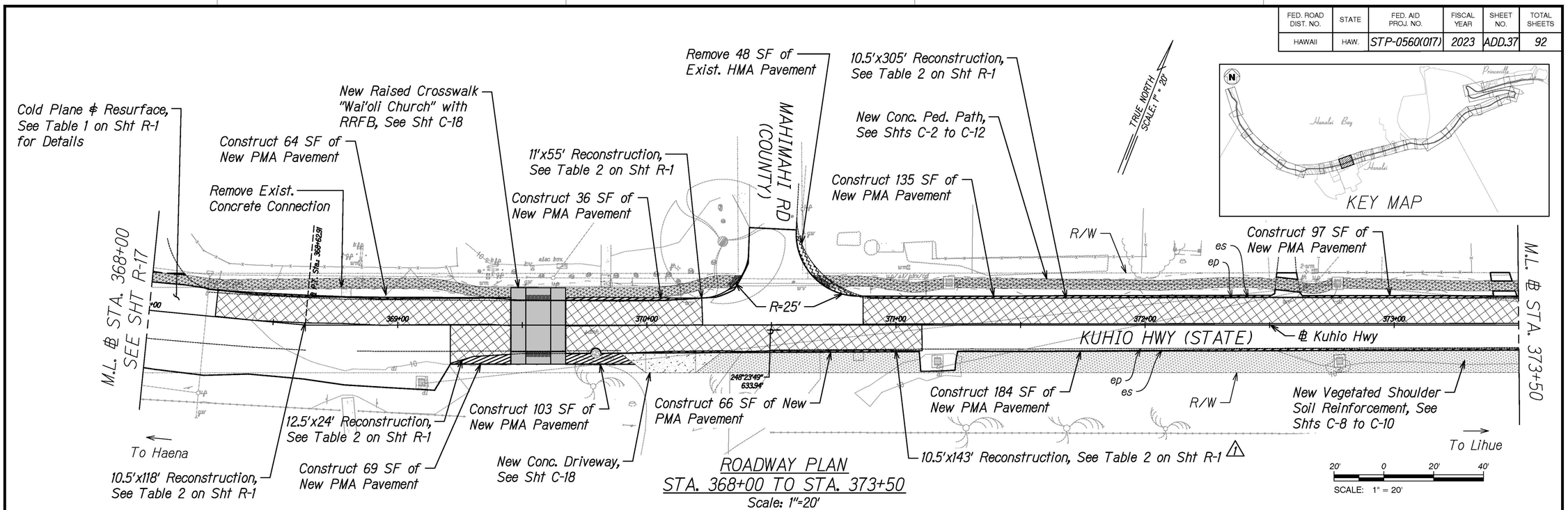

ROADWAY PLAN
STA. 368+00 TO STA. 373+50
Scale: 1"=20'

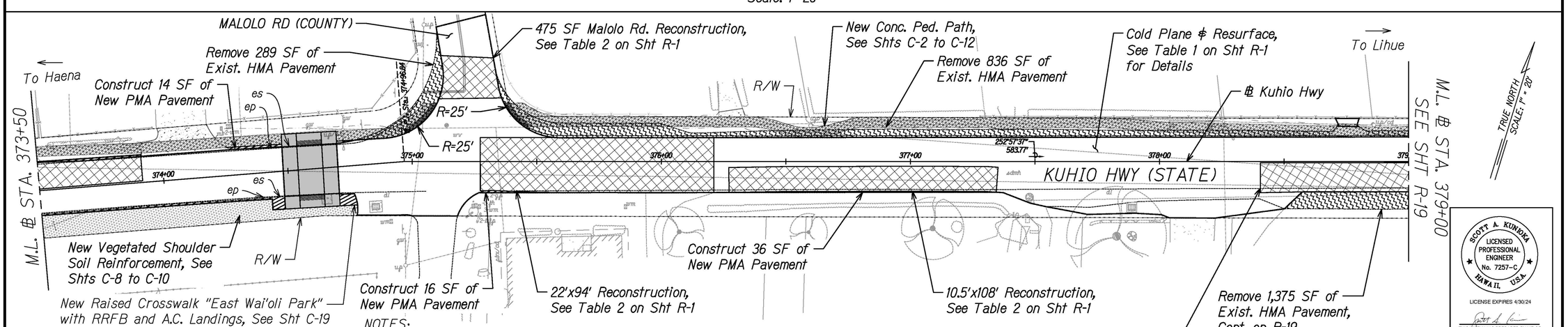

NOTES:

1. For Typical Roadway Sections, See Shts R-1 to R-8
2. Resurface All Existing A.C. Driveways to the R/W Limits
3. Remove All Exist. Excess HMA Pavement Beyond 12" from Center of 6" White Edge Pavement Striping.
4. Construct New PMA Pavement up to 12" from Center of 6" White Edge Pavement Striping if Exist. Shoulder is less than 12".
5. For New Pavement Areas, See Table 2 on Sht R-1

ROADWAY PLAN
STA. 373+50 TO STA. 379+00
Scale: 1"=20'

DATE	REVISION
10/12/23	1 - Corrected Dimension

SCOTT A. KUNIOKA LICENSED PROFESSIONAL ENGINEER No. 7257-C HAWAII, U.S.A.
LICENSE EXPIRES 4/30/24
THIS WORK WAS PREPARED BY ME OR UNDER MY SUPERVISION LICENSE EXPIRES 4/30/24

STATE OF HAWAII
DEPARTMENT OF TRANSPORTATION
HIGHWAYS DIVISION

ROADWAY PLAN

KUHIO HIGHWAY RESURFACING AND SAFETY IMPROVEMENTS
Route 560 M.P. 0.0 to M.P. 4.5
Fed. Aid Proj. No. STP-0560(017)

Scale: 1"=20' Date: July, 2023

SHEET No. R-18A OF 28 SHEETS

ORIGINAL PLAN | SURVEY PLOTTED BY | DRAWN BY | TRACED BY | DESIGNED BY | QUANTITIES BY | CHECKED BY | NOTE BOOK No. | DATE

FED. ROAD DIST. NO.	STATE	FED. AID PROJ. NO.	FISCAL YEAR	SHEET NO.	TOTAL SHEETS
HAWAII	HAW.	STP-0560(017)	2023	ADD.39	92

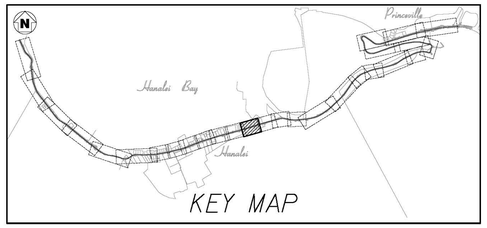

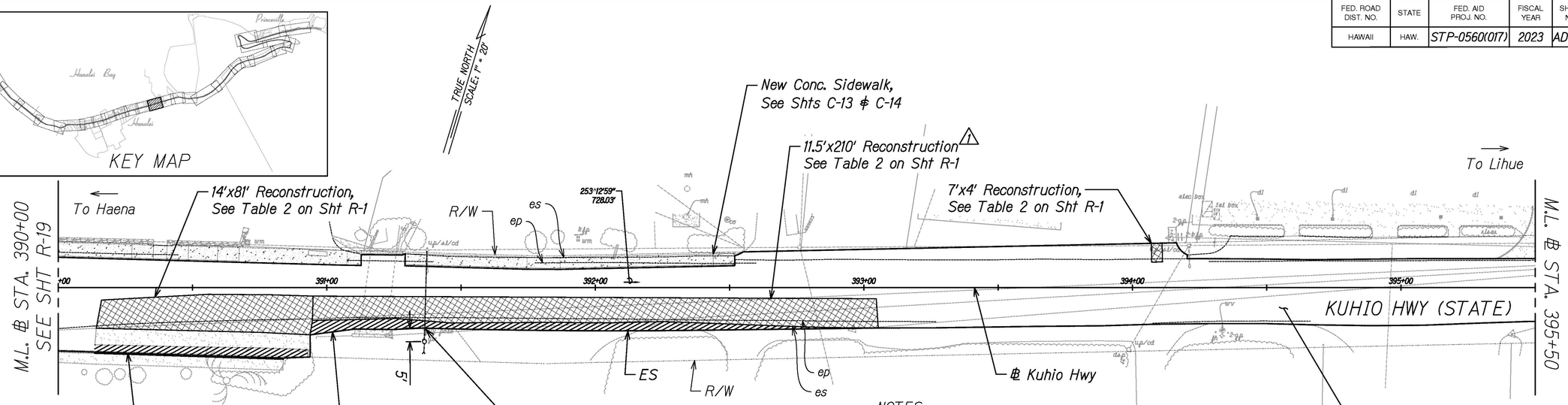

20' 0 20' 40'
SCALE: 1" = 20'

ROADWAY PLAN
STA. 390+00 TO STA. 395+50
Scale: 1"=20'

NOTES:
1. For Typical Roadway Sections, See Shts R-1 to R-8
2. Resurface All Existing A.C. Driveways to the R/W Limits
3. Remove All Exist. Excess HMA Pavement Beyond 12" from Center of 6" White Edge Pavement Striping.
4. Construct New PMA Pavement up to 12" from Center of 6" White Edge Pavement Striping if Exist. Shoulder is less than 12".
5. For New Pavement Areas, See Table 2 on Sht R-1

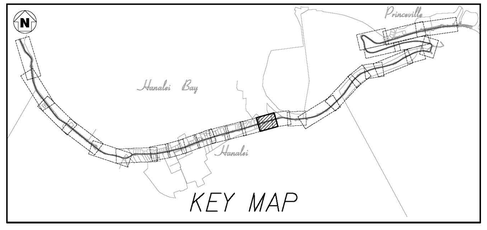

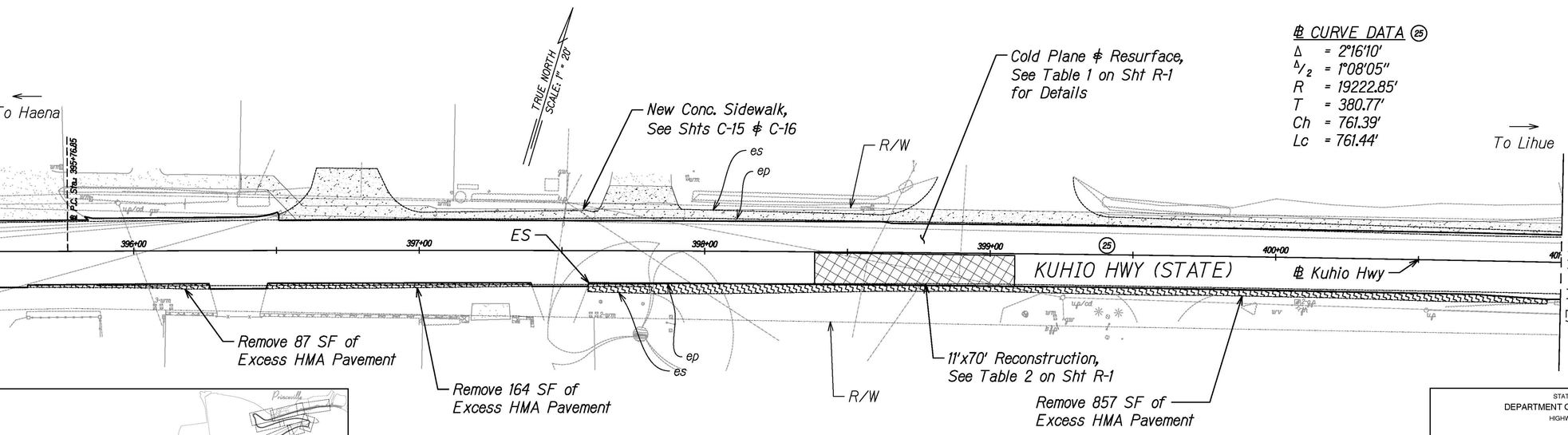

℄ CURVE DATA (25)

Δ	= 2°16'10"
Δ/2	= 1°08'05"
R	= 19222.85'
T	= 380.77'
Ch	= 761.39'
Lc	= 761.44'

20' 0 20' 40'
SCALE: 1" = 20'

ROADWAY PLAN
STA. 395+50 TO STA. 401+00
Scale: 1"=20'

DATE	REVISION
10/12/23	1 - Added Reconstruction Callout

SCOTT A. KUNOKA
LICENSED PROFESSIONAL ENGINEER
No. 7257-C
HAWAII, U.S.A.
LICENSE EXPIRES 4/30/24
THIS WORK WAS PREPARED BY ME OR UNDER MY SUPERVISION LICENSE EXPIRES 4/30/24

STATE OF HAWAII
DEPARTMENT OF TRANSPORTATION
HIGHWAYS DIVISION

ROADWAY PLAN

KUHIO HIGHWAY RESURFACING AND SAFETY IMPROVEMENTS
Route 560 M.P. 0.0 to M.P. 4.5
Fed. Aid Proj. No. STP-0560(017)

Scale: 1"=20' Date: July, 2023

SHEET No. R-20A OF 28 SHEETS

ORIGINAL PLAN | SURVEY PLOTTED BY | DRAWN BY | TRACED BY | DESIGNED BY | QUANTITIES BY | CHECKED BY | DATE | NOTE BOOK | No.

FED. ROAD DIST. NO.	STATE	FED. AID PROJ. NO.	FISCAL YEAR	SHEET NO.	TOTAL SHEETS
HAWAII	HAW.	STP-0560(017)	2023	ADD.41	92

TRUE NORTH
SCALE: 1" = 40'

M.L. ℄ STA. 412+00
SEE SHT R-21

To Haena

℄ CURVE DATA (29)
Δ = 6°02'28"
Δ/2 = 3°01'14"
R = 1479.92'
T = 78.09'
Ch = 155.97'
Lc = 156.04'

℄ CURVE DATA (30)
Δ = 8°23'17"
Δ/2 = 4°11'39"
R = 1309.30'
T = 96.01'
Ch = 191.51'
Lc = 191.68'

℄ CURVE DATA (31)
Δ = 7°29'25"
Δ/2 = 3°44'42"
R = 540.28'
T = 35.37'
Ch = 70.58'
Lc = 70.63'

℄ CURVE DATA (32)
Δ = 15°36'00"
Δ/2 = 7°48'00"
R = 2100.00'
T = 287.66'
Ch = 570.01'
Lc = 571.77'

Sta. 416+41± to Sta. 416+58± (o/s Rt.) (17 LF)
- Remove Exist. Guardrail and Steel Posts, Including 2 350 FLEAT Terminal Ends.
- Install MGS Guardrail with 8" Blockouts, See Shts R-10 & R-11 for Details.

Sta. 419+96± to Sta. 420+10± (o/s Lt.) (14 LF)
- Remove Exist. Guardrail and Steel Posts, Including 2 350 FLEAT Terminal Ends.
- Install MGS Guardrail with 8" Blockouts, See Shts R-10 & R-11 for Details.

Sta. 419+77± to Sta. 420+03± (o/s Rt.) (26 LF)
- Remove Exist. Guardrail and Steel Posts, Including 2 Terminal Ends.
- Install MGS Guardrail with 8" Blockouts, See Shts R-10 & R-11 for Details.

Sta. 422+10± to Sta. 422+21± (o/s Lt.) (11 LF)
- Remove Exist. Guardrail and Steel Posts, Including 2 350 FLEAT Terminal Ends.
- Install MGS Guardrail with 8" Blockouts, See Shts R-10 & R-11 for Details.

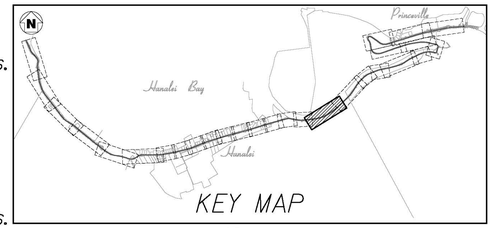

Paint Exist. MGS Guardrail Brown as per Sht N-3 Note 35 & Sht R-10 Note 12

℄ Kuhio Hwy

Cold Plane & Resurface, See Table 1 on Sht R-1 for Details

Sta. 408+90± to Sta. 414+29± (o/s Lt.) (539 LF)
- Remove Exist. Guardrail and Steel Posts, Including 2 350 FLEAT Terminal Ends.
- Install MGS Guardrail with 8" Blockouts, See Shts R-10 & R-11 for Details.

STA. 409+40.46 to STA. 415+88.91
23' Wide Reconstruction,
See Table 2 on Sht R-1
Area = 14,289 SF
Cont. on R-21

Sta. 421+93± to Sta. 422+17± (o/s Rt.) (24 LF)
- Remove Exist. Guardrail and Steel Posts, Including 2 350 FLEAT Terminal Ends.
- Install MGS Guardrail with 8" Blockouts, See Shts R-10 & R-11 for Details.

STA. 420+50.02 to STA. 461+85.96
11.5' Wide Reconstruction,
See Table 2 on Sht R-1
Area = 47,811 SF
Cont. on R-23, R-24, R-25

M.L. ℄ STA. 423+00

To Lihue

40' 0 40' 80'
SCALE: 1" = 40'

ROADWAY PLAN
STA. 412+00 TO STA. 423+00
Scale: 1"=40'

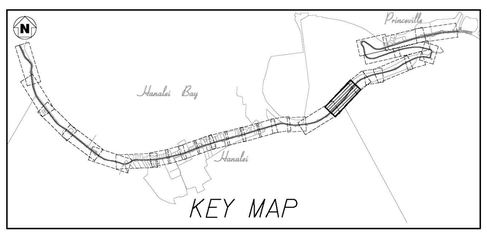

TRUE NORTH
SCALE: 1" = 40'

℄ CURVE DATA (33)
Δ = 13°47'00"
Δ/2 = 6°53'30"
R = 1470.00'
T = 177.67'
Ch = 352.78'
Lc = 353.63'

Sta. 428+15± to Sta. 428+51± (o/s Lt.) (36 LF)
- Remove Exist. Guardrail and Steel Posts, Including 2 350 FLEAT Terminal Ends.
- Install MGS Guardrail with 8" Blockouts, See Shts R-10 & R-11 for Details.

Sta. 427+72± to Sta. 428+72± (o/s Rt.) (100LF) ⚠1
- Remove Exist. Guardrail and Steel Posts, Including 2 Terminal Ends.
- Install MGS Guardrail with 8" Blockouts, See Shts R-10 & R-11 for Details.

To Lihue

M.L. ℄ STA. 434+00
SEE SHT R-23

To Haena

STA. 420+50.02 to STA. 461+85.96
11.5' Wide Reconstruction,
See Table 2 on Sht R-1
Area = 47,811 SF
Cont. on R-23, R-24, R-25

M.L. ℄ STA. 423+00

13'x20' Wide Reconstruction, See Table 2 on Sht R-1

Cold Plane & Resurface, See Table 1 on Sht R-1 for Details

℄ Kuhio Hwy

STA. 431+72.32 to 437+57.85
11.5' Wide Reconstruction,
See Table 2 on Sht R-1
Area = 6,954 SF
Cont. on R-23

(1) Install MASH Compliant TL-3 Terminal Section, MFLEAT (40± LF)

(2) Install MASH Compliant TL-3 Terminal Section, MSKT-SP-MGS, SoftStop, or Max-Tension (50± LF)

(3) Install Trailing-End Anchorage System End Terminal Section, See Sht R-13 ⚠1

40' 0 40' 80'
SCALE: 1" = 40'

ROADWAY PLAN
STA. 423+00 TO STA. 343+00
Scale: 1"=40'

NOTE:
1. For Typical Roadway Sections, See Shts R-1 to R-8.
2. Where New Guardrail Posts are Installed in Existing Holes, Fill and Compact Holes Prior to Installation.
3. New Guardrail to Follow Exist. Alignment/Location of Exist. guardrail.

DATE	REVISION
10/12/23	⚠1 - Revised Callout and Layout

SCOTT A. KUNIOKA
LICENSED PROFESSIONAL ENGINEER
No. 7257-C
HAWAII, U.S.A.
LICENSE EXPIRES 4/30/24
THIS WORK WAS PREPARED BY ME OR UNDER MY SUPERVISION LICENSE EXPIRES 4/30/24

STATE OF HAWAII
DEPARTMENT OF TRANSPORTATION
HIGHWAYS DIVISION

ROADWAY PLAN

KUHIO HIGHWAY RESURFACING AND SAFETY IMPROVEMENTS
Route 560 M.P. 0.0 to M.P. 4.5
Fed. Aid Proj. No. STP-0560(017)

Scale: 1"=40' Date: July, 2023

SHEET No. R-22A OF 28 SHEETS

ORIGINAL PLAN | SURVEY PLOTTED BY | DRAWN BY | TRACED BY | DESIGNED BY | QUANTITIES BY | CHECKED BY | DATE | NOTE BOOK | No.

ADD. 41

FED. ROAD DIST. NO.	STATE	FED. AID PROJ. NO.	FISCAL YEAR	SHEET NO.	TOTAL SHEETS
HAWAII	HAW.	STP-0560(017)	2023	ADD.42	92

℄ CURVE DATA (34)

Δ = 16°42'30"
Δ/2 = 8°21'15"
R = 1110.00'
T = 163.00'
Ch = 322.55'
Lc = 323.69'

℄ CURVE DATA (35)

Δ = 18°28'23"
Δ/2 = 9°14'12"
R = 470.00'
T = 76.43'
Ch = 150.88'
Lc = 151.54'

TRUE NORTH
SCALE: 1" = 20'

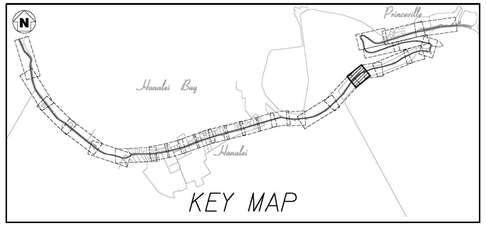

STA. 420+50.02 to STA. 461+85.96
11.5' Wide Reconstruction,
See Table 2 on Sht R-1
Area = 47,811 SF
Cont. on R-22, R-24, R-25

Paint Exist. MGS Guardrail Brown as per Sht N-3 Note 35 ℄ Sht R-10 Note 12

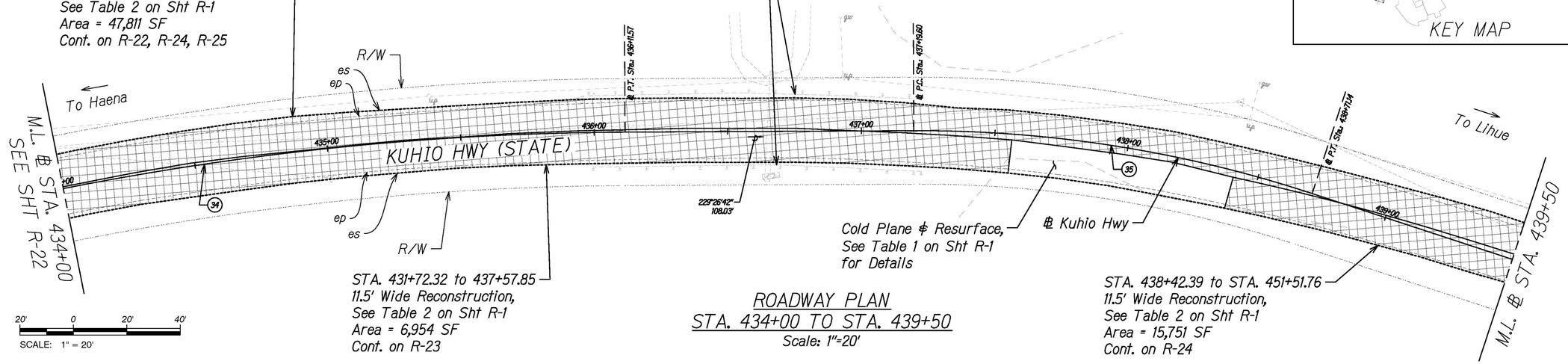

STA. 431+72.32 to 437+57.85
11.5' Wide Reconstruction,
See Table 2 on Sht R-1
Area = 6,954 SF
Cont. on R-23

Cold Plane ℄ Resurface,
See Table 1 on Sht R-1
for Details

℄ Kuhio Hwy

STA. 438+42.39 to STA. 451+51.76
11.5' Wide Reconstruction,
See Table 2 on Sht R-1
Area = 15,751 SF
Cont. on R-24

ROADWAY PLAN
STA. 434+00 TO STA. 439+50
Scale: 1"=20'

STA. 420+50.02 to STA. 461+85.96
11.5' Wide Reconstruction,
See Table 2 on Sht R-1
Area = 47,811 SF
Cont. on R-22, R-24, R-25

Sta. 443+99± to Sta. 447+48± (o/s Lt.) (349 LF)
- Remove Exist. Guardrail and Steel Posts, Including 2 350 FLEAT Terminal Ends.
- Install MGS Guardrail with 8" Blockouts, See Shts R-10 ℄ R-11 for Details.

Sta. 443+92± to Sta. 444+21± (o/s Rt.) (21 LF)
- Remove Exist. Guardrail and Steel Posts, Including 2 Terminal Ends.
- Install MGS Guardrail with 8" Blockouts, See Shts R-10 ℄ R-11 for Details.

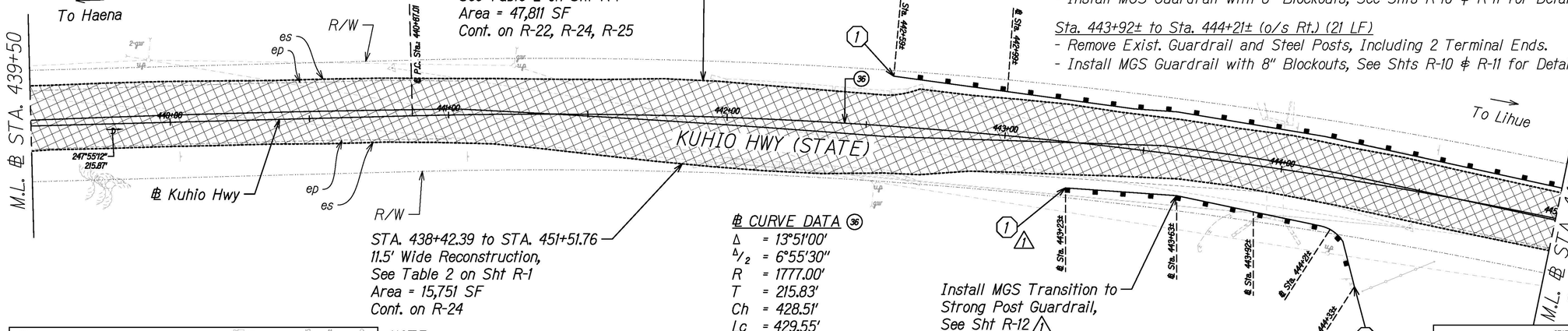

STA. 438+42.39 to STA. 451+51.76
11.5' Wide Reconstruction,
See Table 2 on Sht R-1
Area = 15,751 SF
Cont. on R-24

℄ CURVE DATA (36)

Δ = 13°51'00"
Δ/2 = 6°55'30"
R = 1777.00'
T = 215.83'
Ch = 428.51'
Lc = 429.55'

Install MGS Transition to Strong Post Guardrail, See Sht R-12 (1)

(1) Install MASH Compliant TL-3 Terminal Section, MFLEAT (40± LF)

(2) Install MASH Compliant TL-3 Terminal Section, MSKT-SP-MGS, SoftStop, or Max-Tension (50± LF)

(3) Install Trailing-End Anchorage System End Terminal Section, See Sht R-13 (1)

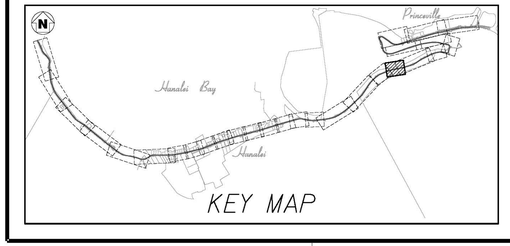

NOTE:
1. For Typical Roadway Sections, See Shts R-1 to R-8.
2. Where New Guardrail Posts are Installed in Existing Holes, Fill and Compact Holes Prior to Installation.
3. New Guardrail to Follow Exist. Alignment/Location of Exist. guardrail.

20' 0 20' 40'
SCALE: 1" = 20'

ROADWAY PLAN
STA. 439+50 TO STA. 445+00
Scale: 1"=20'

DATE	REVISION
10/12/23	(1) - Revised Callout and Layout

SCOTT A. KUNIOKA
LICENSED PROFESSIONAL ENGINEER
No. 7257-C
HAWAII, U.S.A.
LICENSE EXPIRES 4/30/24
THIS WORK WAS PREPARED BY ME OR UNDER MY SUPERVISION LICENSE EXPIRES 4/30/24

STATE OF HAWAII
DEPARTMENT OF TRANSPORTATION
HIGHWAYS DIVISION

ROADWAY PLAN

KUHIO HIGHWAY RESURFACING AND SAFETY IMPROVEMENTS
Route 560 M.P. 0.0 to M.P. 4.5
Fed. Aid Proj. No. STP-0560(017)

Scale: 1"=20' Date: July, 2023

SHEET No. R-23A OF 28 SHEETS

ORIGINAL PLAN
SURVEY PLOTTED BY
DRAWN BY
TRACED BY
DESIGNED BY
QUANTITIES BY
CHECKED BY
DATE
NOTE BOOK
No.

FED. ROAD DIST. NO.	STATE	FED. AID PROJ. NO.	FISCAL YEAR	SHEET NO.	TOTAL SHEETS
HAWAII	HAW.	STP-0560(017)	2023	ADD.43	92

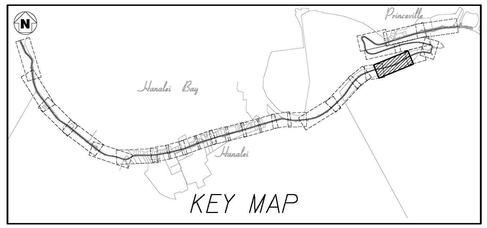

℄ CURVE DATA (37)
Δ = 8°01'00"
Δ/2 = 4°00'30"
R = 1600.00'
T = 112.12'
Ch = 223.68'
Lc = 223.87'

℄ CURVE DATA (38)
Δ = 17°51'00"
Δ/2 = 8°55'30"
R = 657.00'
T = 103.18'
Ch = 203.86'
Lc = 204.68'

℄ CURVE DATA (39)
Δ = 7°25'30"
Δ/2 = 3°42'45"
R = 850.00'
T = 55.15'
Ch = 110.08'
Lc = 110.15'

Sta. 443+99± to Sta. 447+48± (o/s Lt.) (349 LF)
- Remove Exist. Guardrail and Steel Posts, Including 2 350 FLEAT Terminal Ends.
- Install MGS Guardrail with 8" Blockouts, See Shts R-10 & R-11 for Details.

Sta. 450+35± to Sta. 451+17± (o/s Lt.) (82 LF)
- Remove Exist. Guardrail and Steel Posts, Including 350 FLEAT Terminal End.
- Install MGS Guardrail with 8" Blockouts, See Shts R-10 & R-11 for Details.

Paint Exist. MGS Guardrail Brown as per Sht N-3 Note 35 & Sht R-10 Note 12

℄ Sta. 451+17± o/s Lt. Connect New Guardrail to Exist. MGS Guardrail.

STA. 420+50.02 to STA. 461+85.96
11.5' Wide Reconstruction,
See Table 2 on Sht R-1
Area = 47,811 SF
Cont. on R-22, R-23, R-25

Sta. 453+95± to Sta. 454+12± (o/s Lt.) (17 LF)
- Remove Exist. Guardrail and Steel Posts, Including 2 350 FLEAT Terminal Ends.
- Install MGS Guardrail with 8" Blockouts, See Shts R-10 & R-11 for Details.

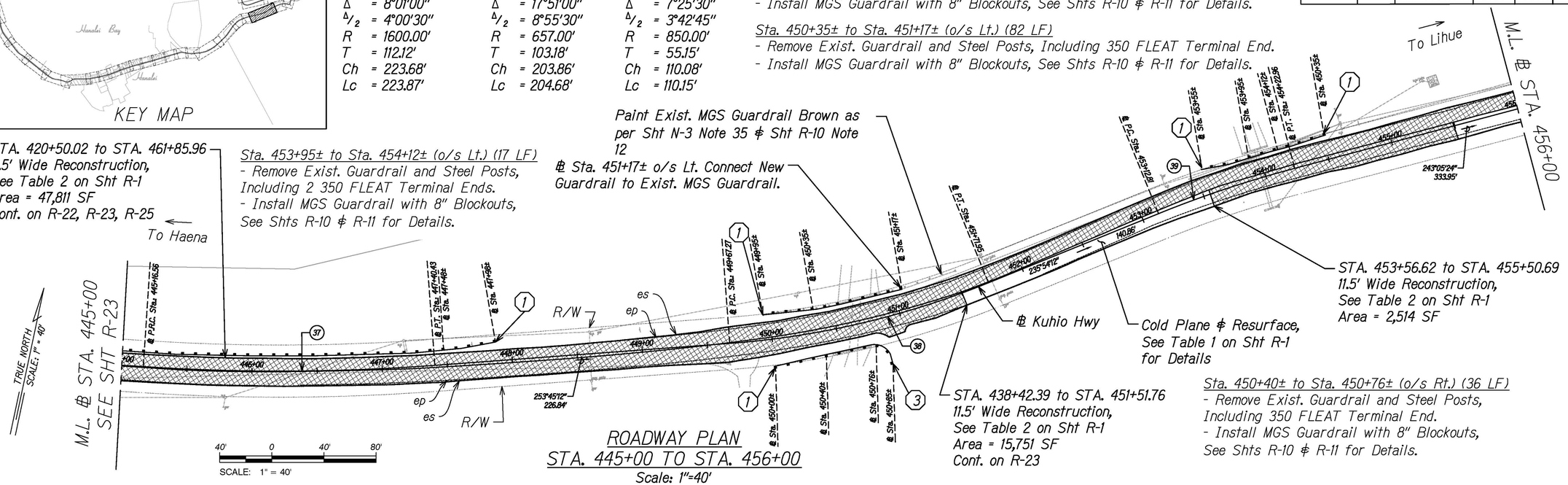

Sta. 450+40± to Sta. 450+76± (o/s Rt.) (36 LF)
- Remove Exist. Guardrail and Steel Posts, Including 350 FLEAT Terminal End.
- Install MGS Guardrail with 8" Blockouts, See Shts R-10 & R-11 for Details.

ROADWAY PLAN
STA. 445+00 TO STA. 456+00
Scale: 1"=40'

Sta. 458+37± to Sta. 458+97± (o/s Lt.) (60 LF)
- Remove Exist. Guardrail and Steel Posts, Including 2 350 FLEAT Terminal Ends.
- Install MGS Guardrail with 8" Blockouts, See Shts R-10 & R-11 for Details.

℄ CURVE DATA (40)
Δ = 19°03'09"
Δ/2 = 9°31'35"
R = 945.27'
T = 158.63'
Ch = 312.88'
Lc = 314.33'

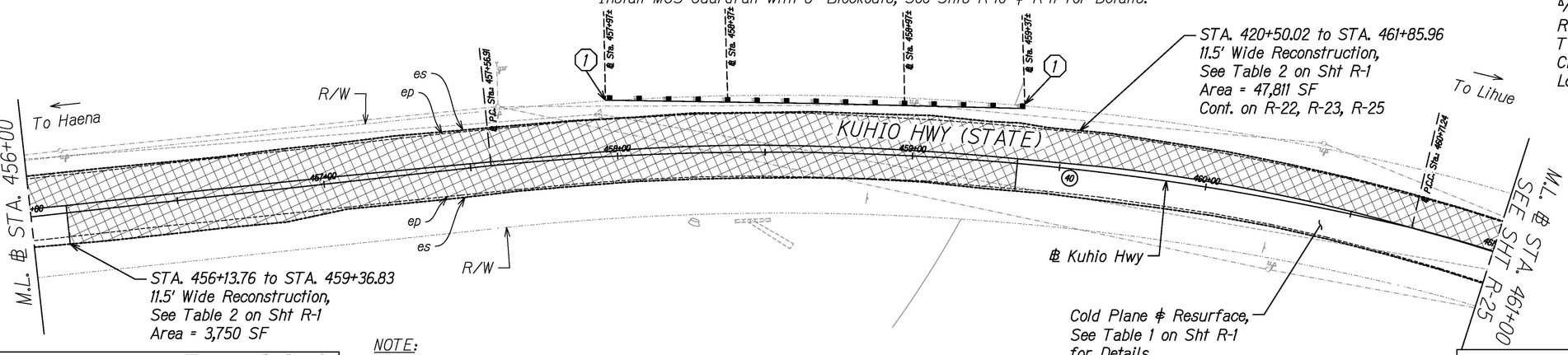

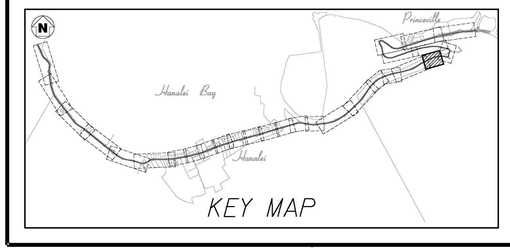

NOTE:
1. For Typical Roadway Sections, See Shts R-1 to R-8.
2. Where New Guardrail Posts are Installed in Existing Holes, Fill and Compact Holes Prior to Installation.
3. New Guardrail to Follow Exist. Alignment/Location of Exist. guardrail.

(1) Install MASH Compliant TL-3 Terminal Section, MFLEAT (40± LF)

(2) Install MASH Compliant TL-3 Terminal Section, MSKT-SP-MGS, SoftStop, or Max-Tension (50± LF)

(3) Install Trailing-End Anchorage System End Terminal Section, See Sht R-13 △1

SCALE: 1" = 20'

ROADWAY PLAN
STA. 456+00 TO STA. 461+00
Scale: 1"=20'

DATE	REVISION
10/12/23	△1 - Revised Callout

SCOTT A. KUNIOKA
LICENSED PROFESSIONAL ENGINEER
No. 7257-C
HAWAII, U.S.A.
LICENSE EXPIRES 4/30/24
THIS WORK WAS PREPARED BY ME OR UNDER MY SUPERVISION LICENSE EXPIRES 4/30/24

STATE OF HAWAII
DEPARTMENT OF TRANSPORTATION
HIGHWAYS DIVISION

ROADWAY PLAN

KUHIO HIGHWAY RESURFACING AND SAFETY IMPROVEMENTS
Route 560 M.P. 0.0 to M.P. 4.5
Fed. Aid Proj. No. STP-0560(017)

Scale: As Noted Date: July, 2023

SHEET No. R-24A OF 28 SHEETS

ORIGINAL PLAN | SURVEY PLOTTED BY | DRAWN BY | TRACED BY | DESIGNED BY | QUANTITIES BY | CHECKED BY | NOTE BOOK No. | DATE

FED. ROAD DIST. NO.	STATE	FED. AID PROJ. NO.	FISCAL YEAR	SHEET NO.	TOTAL SHEETS
HAWAII	HAW.	STP-0560(017)	2023	ADD.49	92

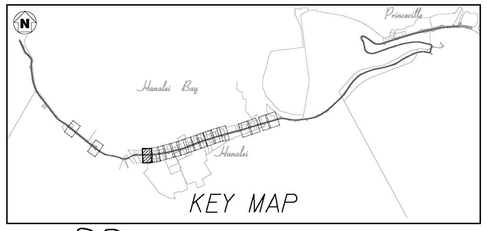

℄ CURVE DATA ①
Δ = 28°53'47"
Δ/2 = 14°26'53"
R = 7.50'
T = 1.93'
Ch = 3.74'
Lc = 3.78'

℄ CURVE DATA ②
Δ = 29°04'30"
Δ/2 = 14°32'15"
R = 10.00'
T = 2.59'
Ch = 5.02'
Lc = 5.07'

℄ CURVE DATA ③
Δ = 16°26'27"
Δ/2 = 8°13'14"
R = 10.00'
T = 1.44'
Ch = 2.86'
Lc = 2.87'

℄ CURVE DATA ④
Δ = 16°42'34"
Δ/2 = 8°21'17"
R = 10.05'
T = 1.48'
Ch = 2.92'
Lc = 2.93'

℄ CURVE DATA ⑤
Δ = 12°36'12"
Δ/2 = 6°18'06"
R = 25.00'
T = 2.76'
Ch = 5.49'
Lc = 5.50'

℄ CURVE DATA ⑥
Δ = 14°17'05"
Δ/2 = 7°08'32"
R = 25.00'
T = 3.13'
Ch = 6.22'
Lc = 6.23'

℄ CURVE DATA ⑦
Δ = 2°35'18"
Δ/2 = 1°17'39"
R = 100.00'
T = 2.26'
Ch = 4.52'
Lc = 4.52'

℄ CURVE DATA ⑧
Δ = 2°07'52"
Δ/2 = 1°04'56"
R = 100.00'
T = 1.86'
Ch = 3.72'
Lc = 3.72'

℄ CURVE DATA ⑨
Δ = 0°55'10"
Δ/2 = 0°27'35"
R = 200.00'
T = 1.60'
Ch = 3.21'
Lc = 3.21'

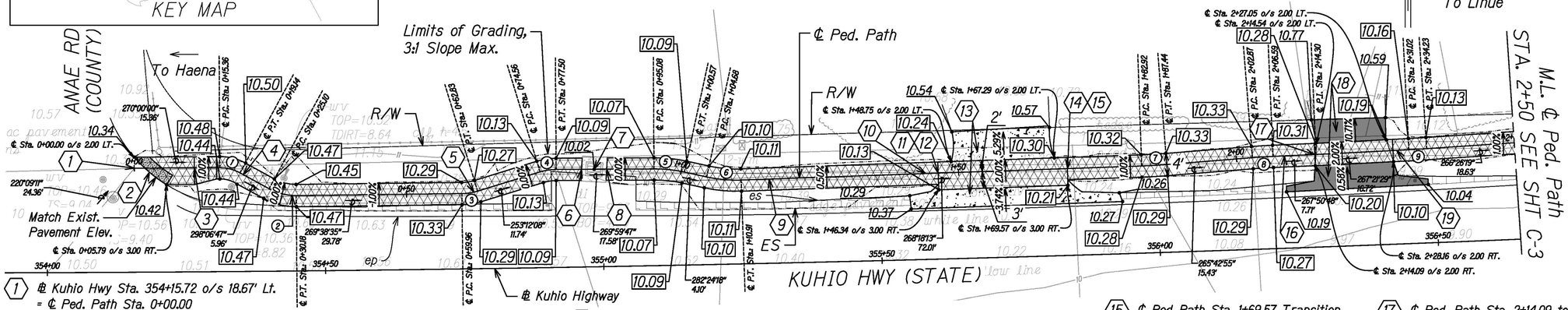

1. ℄ Kuhio Hwy Sta. 354+15.72 o/s 18.67' Lt. = ℄ Ped. Path Sta. 0+00.00
2. ADA Detectable Warning Panel, Tuftile or Approved Equal, See Detail Sht C-22
3. ℄ Ped. Path Sta. 0+10.80 Begin 4' Long Transition From 5' to 4' Width
4. ℄ Ped. Path Sta. 0+19.81 Begin 15' Long Cross Slope Transition From 1% to -1%
5. ℄ Ped. Path Sta. 0+62.16 Begin 5' Long Cross Slope Transition From -1% to 0%
6. ℄ Ped. Path Sta. 0+82.08 Connect to Exist. GDI; Match Exist. Elev.
7. ℄ Ped. Path Sta. 0+84.33 Remove Exist. GDI Grate and Replace with ADA Compliant Grate, See Sht R-9; Match Exist. Elev.
8. ℄ Ped. Path Sta. 0+86.58 Connect to Exist. GDI; Match Exist. Elev.
9. ℄ Ped. Path Sta. 1+15.88 Begin 5' Long Cross Slope Transition From 0% to 0.5%
10. ℄ Ped. Path Sta. 1+44.05 Begin 5' Long Cross Slope Transition From 0.5% to 2%
11. ℄ Ped. Path Sta. 1+46.34 to Sta. 1+69.57 Thicken Ped. Path Conc. to 6" Deep Across Driveway, See Details This Sht
12. ℄ Ped. Path Sta. 1+46.34 Transition From 4' to 5' Width (2' Lt., 3' Rt. of ℄)
13. Demolish & Reconstruct Exist. Conc. Driveway; Match Exist. Dimensions, Radii, and Elev. at Conn. to Hwy and Property Line
14. ℄ Ped. Path Sta. 1+69.57 Begin 5' Long Cross Slope Transition From 2% to 1%
15. ℄ Ped Path Sta. 1+69.57 Transition From 5' to 4' Width
16. ℄ Ped. Path Sta. 2+08.80 Begin 5' Long Cross Slope Transition From 1% to 2%
17. ℄ Ped. Path Sta. 2+14.09 to Sta. 2+28.16 Thicken Ped. Path Conc. to 6" Deep Across Driveway, See Details This Sht
18. Demolish & Reconstruct Exist. A.C. Driveway; Match Exist. Dimensions, Radii, and Elev. at Conn. to Hwy and Property Line
19. ℄ Ped. Path Sta. 2+28.85 Begin 5' Long Cross Slope Transition From 2% to 1%

WEST HANALEI PEDESTRIAN PATH
STA. 0+00 TO STA. 2+50 - PLAN
Scale: 1"=10'

SCALE: 1" = 10'

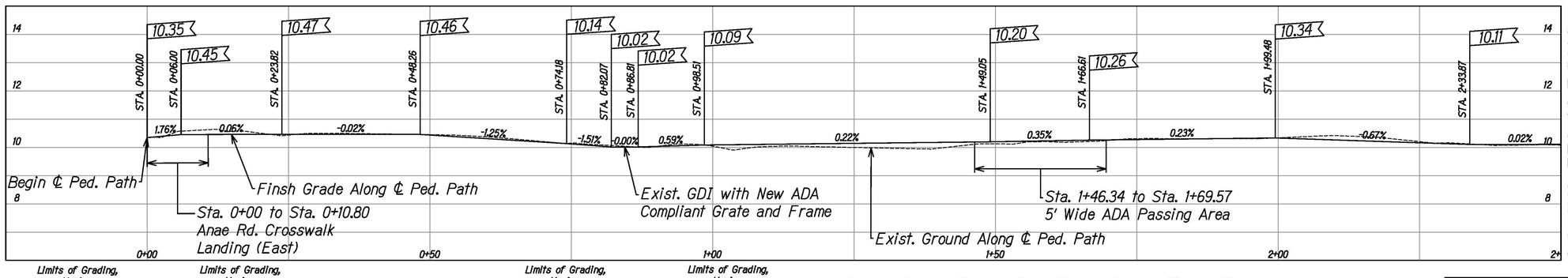

SCALE: 1" = 2' SCALE: 1" = 10'

WEST HANALEI PEDESTRIAN PATH
STA. 0+00 TO STA. 2+50 - PROFILE
Scale: Horz: 1"=10'
Vert: 1"=2'

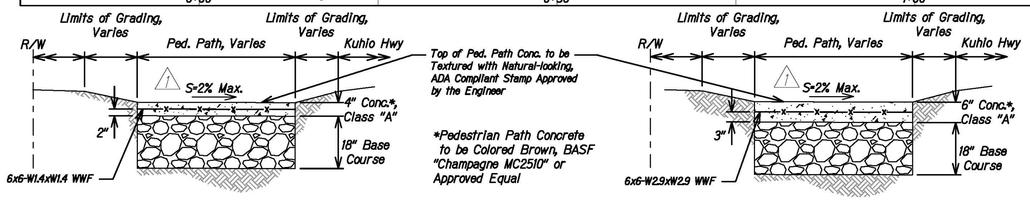

PEDESTRIAN PATH DETAIL
Not to Scale

6" THICK PEDESTRIAN PATH DETAIL
Not to Scale

DATE	REVISION
10/12/23	1 - Revised Slope Maximum

SCOTT A. KUNIOKA LICENSED PROFESSIONAL ENGINEER No. 7257-C HAWAII, U.S.A.
LICENSE EXPIRES 4/30/24
THIS WORK WAS PREPARED BY ME OR UNDER MY SUPERVISION LICENSE EXPIRES 4/30/24

STATE OF HAWAII
DEPARTMENT OF TRANSPORTATION
HIGHWAYS DIVISION

HANALEI TOWN CIVIL IMPROVEMENTS
KUHIO HIGHWAY RESURFACING AND SAFETY IMPROVEMENTS
Route 560 M.P. 0.0 to M.P. 4.5
Fed. Aid Proj. No. STP-0560(017)

Scale: As Noted Date: July, 2023

SHEET No. C-2A OF 22 SHEETS

ORIGINAL PLAN | SURVEY PLOTTED BY | DRAWN BY | TRACED BY | DESIGNED BY | QUANTITIES BY | CHECKED BY | NOTE BOOK | No. | DATE

FED. ROAD DIST. NO.	STATE	FED. AID PROJ. NO.	FISCAL YEAR	SHEET NO.	TOTAL SHEETS
HAWAII	HAW.	STP-0560(017)	2023	ADD.60	92

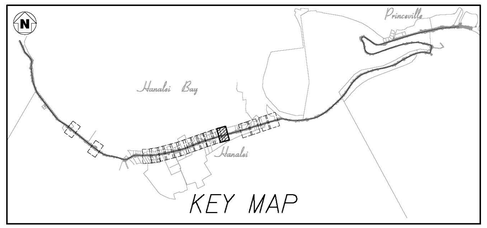

KEY MAP

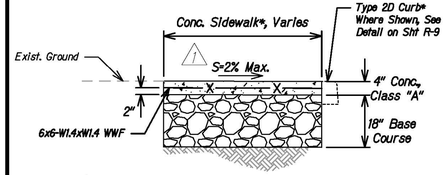

*Sidewalk & Curb to be Colored Brown, BASF "Champagne MC2510" or Approved Equal

4" THICK CONC. SIDEWALK DETAIL

Not to Scale

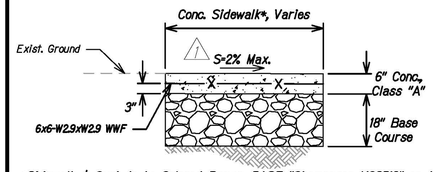

*Sidewalk & Curb to be Colored Brown, BASF "Champagne MC2510" or Approved Equal

6" THICK CONC. SIDEWALK DETAIL

Not to Scale

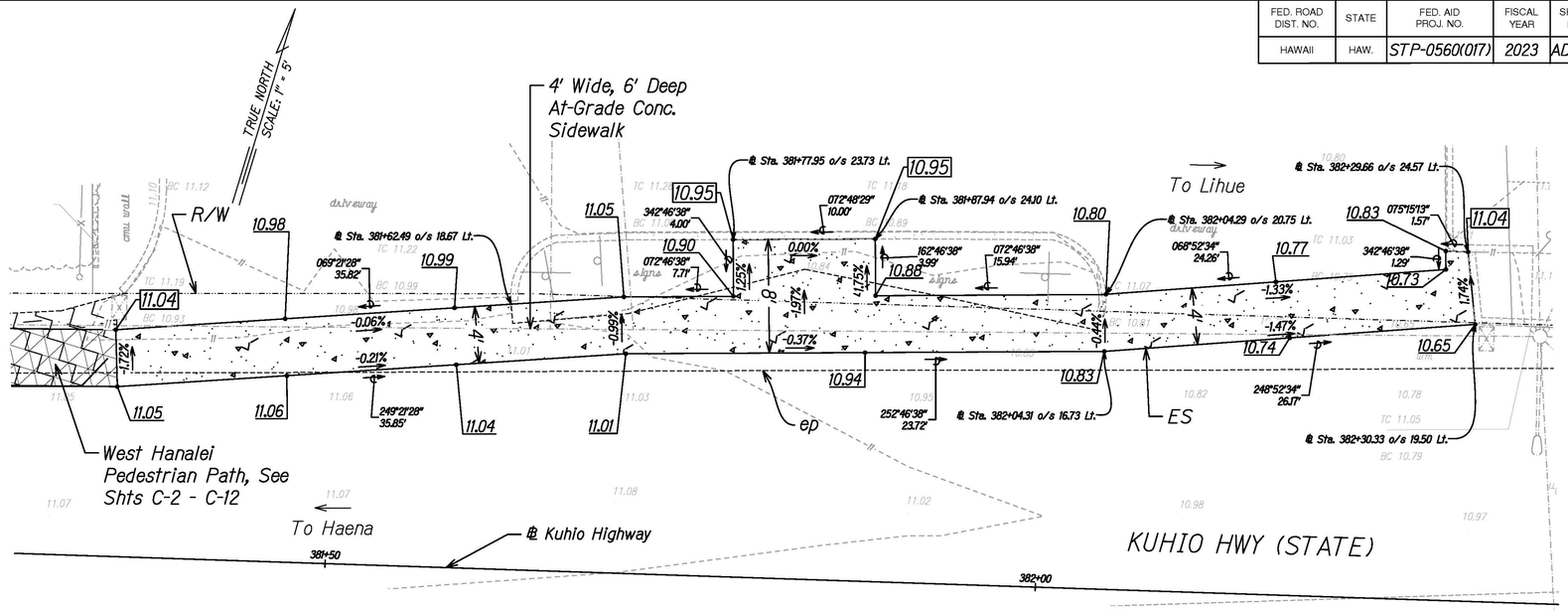

HANALEI POST OFFICE AT-GRADE SIDEWALK CONNECTION PLAN

Scale: 1"=5'

5' 0 5' 10'

SCALE: 1" = 5'

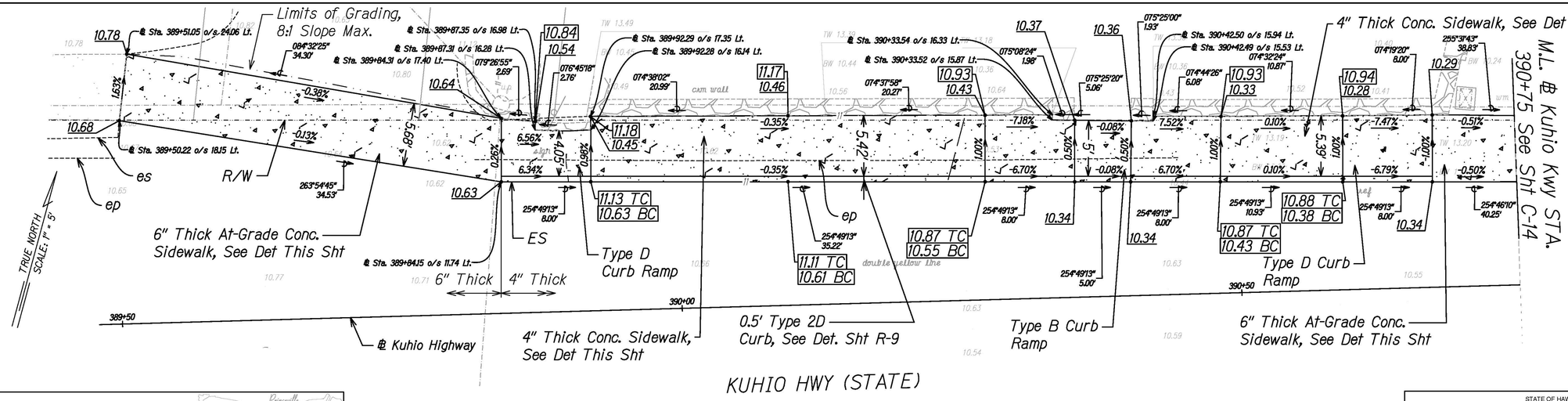

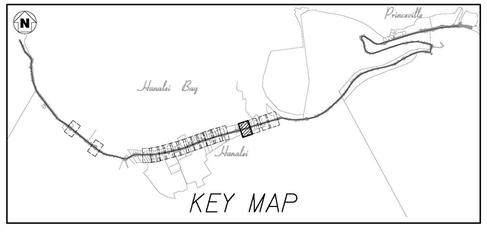

KEY MAP

5' 0 5' 10'

SCALE: 1" = 5'

EAST HANALEI RAISED SIDEWALK PLAN

Scale: 1"=5'

DATE	REVISION
10/12/23	1 - Revised Slope Maximum

SCOTT A. KUNIOKA LICENSED PROFESSIONAL ENGINEER No. 7257-C HAWAII, U.S.A.

LICENSE EXPIRES 4/30/24

THIS WORK WAS PREPARED BY ME OR UNDER MY SUPERVISION LICENSE EXPIRES 4/30/24

STATE OF HAWAII
DEPARTMENT OF TRANSPORTATION
HIGHWAYS DIVISION

HANALEI TOWN CIVIL IMPROVEMENTS

KUHIO HIGHWAY RESURFACING AND SAFETY IMPROVEMENTS
Route 560 M.P. 0.0 to M.P. 4.5
Fed. Aid Proj. No. STP-0560(017)

Scale: 1"=5' Date: July, 2023

SHEET No. C-13A OF 22 SHEETS

ORIGINAL PLAN | NOTE BOOK No. | SURVEY PLOTTED BY | DRAWN BY | TRACED BY | DESIGNED BY | QUANTITIES BY | CHECKED BY | DATE

FED. ROAD DIST. NO.	STATE	FED. AID PROJ. NO.	FISCAL YEAR	SHEET NO.	TOTAL SHEETS
HAWAII	HAW.	STP-0560(017)	2023	ADD.71	92

SIGN POST NOTES:

1. Object Markers (OM-5) shall be installed on all proposed regulatory and warning sign posts within the project limits.
2. If a strip of reflective material is used on the sign support, it shall be at least 2 inches in width, it shall be placed for the full length of the support from the sign within 2 feet above the edge of roadway, and its color shall match the background color of the sign, except that the color of the strip for the "YIELD" and "DO NOT ENTER" signs shall be red. Payment for reflective material shall be considered incidental to the various pay items.
3. Background of object marker shall be retroreflectorized with Type XI retroreflective sheeting.
4. Install new type II Object Marker (OM2-2H) on all utility poles and trees that are shown on the pavement and striping plan. Refer to Standard Plan No. TE-15 for details.
5. All red OM-5 object markers shall cover 4 sides of the sign post. All other OM-5 object marker colors shall cover 3 sides of the sign post, facing all directions.
6. See TE-16 for typical sign installation.
7. All existing RRFB assemblies shall be returned to the State.

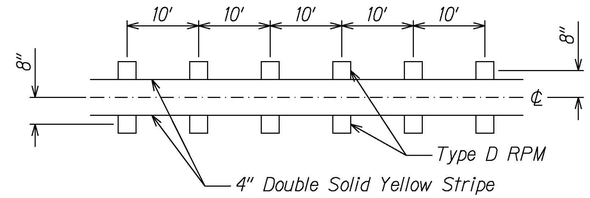

LAYOUT AT DOUBLE NO PASS ZONE
Not to Scale

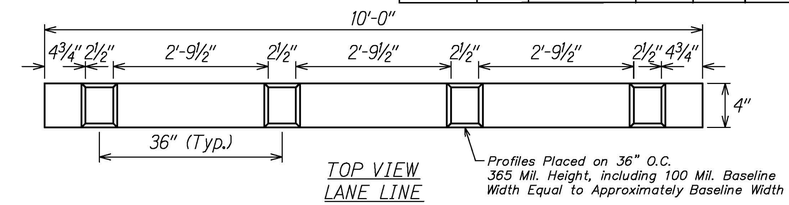

TOP VIEW
LANE LINE

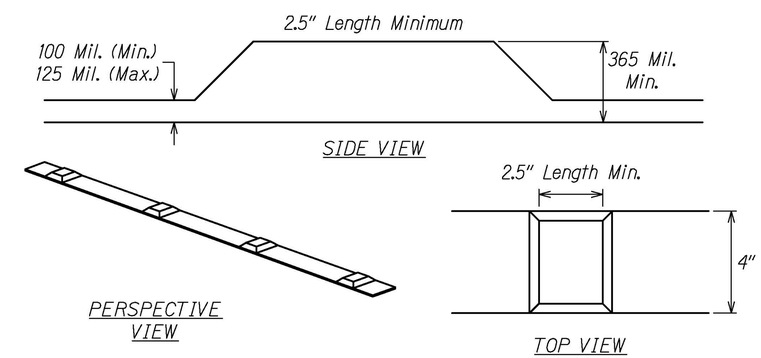

NOTES:
1. The Thermoplastic Material shall be Alkyd-based Compound Formulated for Profiled Pavement Marking. See Specs Subsection 629.03 for Additional Requirements.
2. The Engineer will include the Longitudinal Gaps for Skip Striping, up to Thirty (30) Feet Long, in the Measurement for Payment.
3. Install Yellow Profiled Thermoplastic Stripes for Centerline Passing Zone.

PROFILED THERMOPLASTIC STRIPING DETAIL
Not to Scale

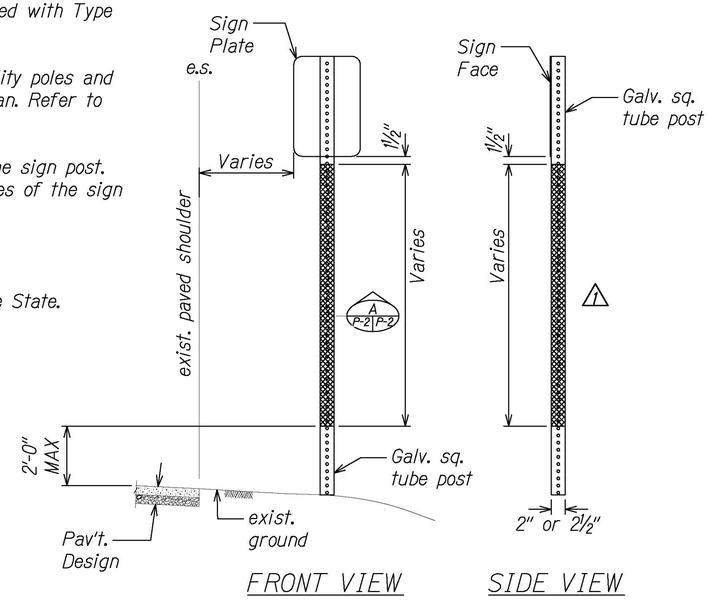

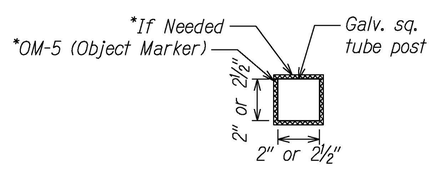

SECTION A P-2 P-2

*NOTE: All red OM-5 object markers shall be 4-sided.

OBJECT MARKER (OM-5) DETAIL @ TRAFFIC SIGN POST
Not to Scale

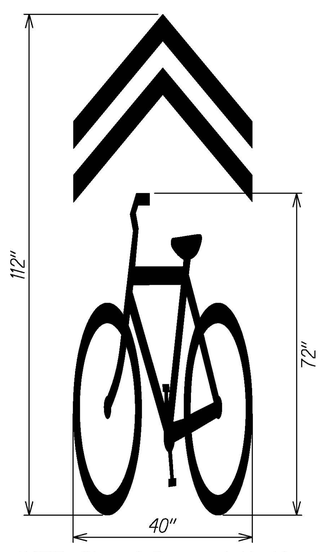

NOTE: Shared Pavement Markings to be Centered in Lane

SHARED LANE PAVEMENT MARKING DETAIL
Not to Scale

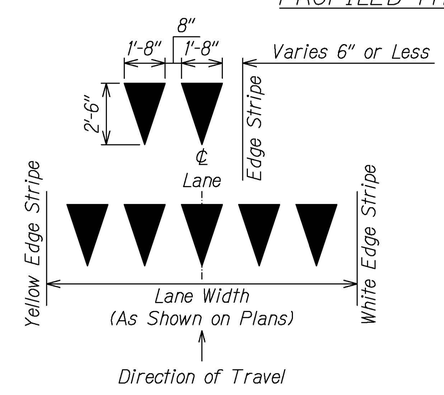

YIELD LINE
Not to Scale

DATE	REVISION
10/12/23	1 - Revised Detail

SCOTT A. KUNIOKA
LICENSED PROFESSIONAL ENGINEER
No. 7257-C
HAWAII, U.S.A.
LICENSE EXPIRES 4/30/24
THIS WORK WAS PREPARED BY ME OR UNDER MY SUPERVISION LICENSE EXPIRES 4/30/24

STATE OF HAWAII
DEPARTMENT OF TRANSPORTATION
HIGHWAYS DIVISION

PAVEMENT MARKING NOTES & DETAILS

KUHIO HIGHWAY RESURFACING AND SAFETY IMPROVEMENTS
Route 560 M.P. 0.0 to M.P. 4.5
Fed. Aid Proj. No. STP-0560(017)

Scale: Not to Scale Date: July, 2023

SHEET No. P-2A OF 20 SHEETS

ORIGINAL PLAN | SURVEY PLOTTED BY | DRAWN BY | TRACED BY | DESIGNED BY | QUANTITIES BY | CHECKED BY | DATE | NOTE BOOK | No.

FED. ROAD DIST. NO.	STATE	FED. AID PROJ. NO.	FISCAL YEAR	SHEET NO.	TOTAL SHEETS
HAWAII	HAW.	STP-0560(017)	2023	ADD.72	92

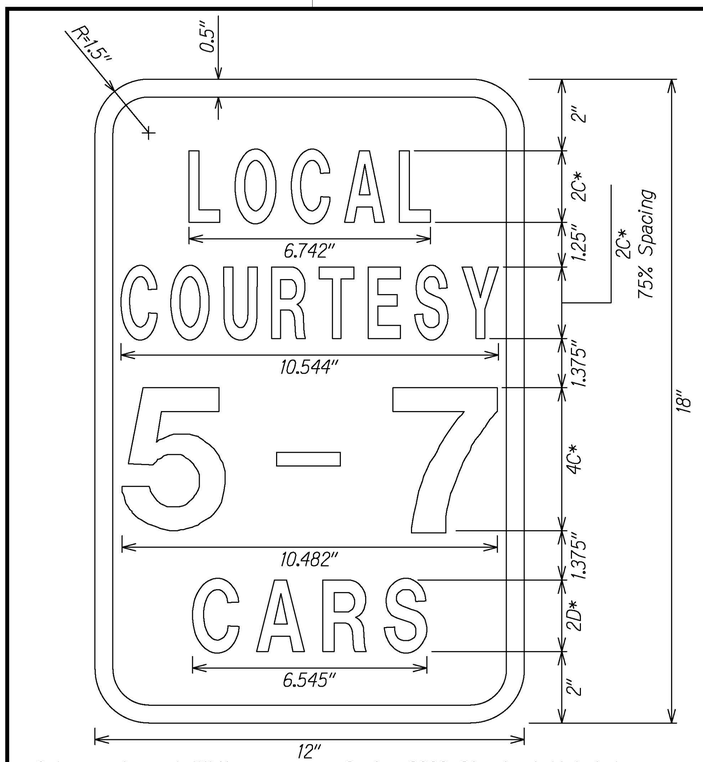

Colors: Legend: White
Background: Blue

* Series 2000 Standard Alphabets
Optically Locate Numerals About Centerline

LOCAL COURTESY TRAFFIC SIGN DETAIL

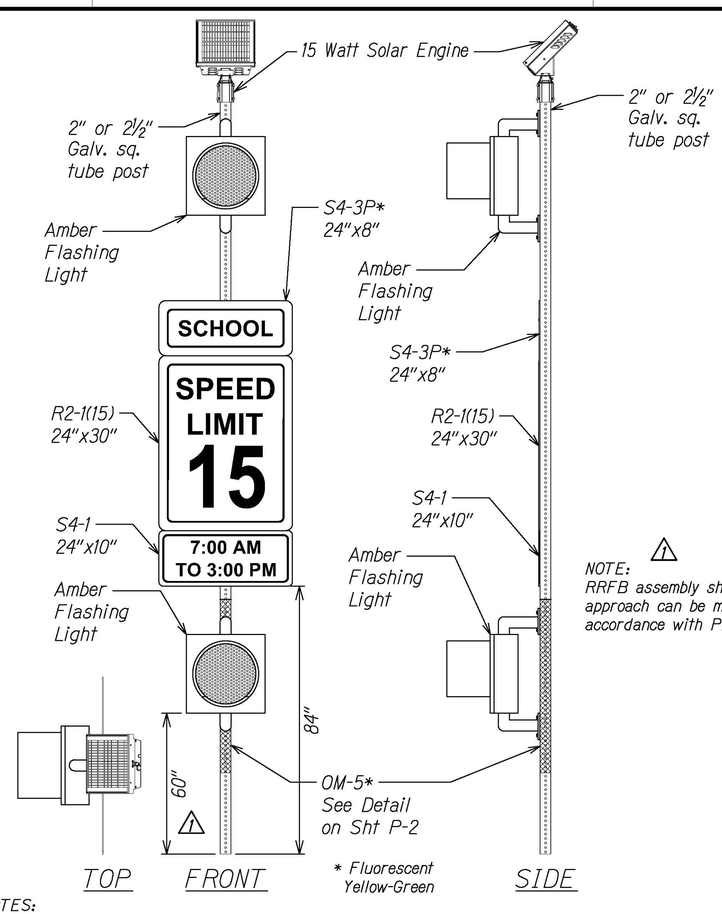

NOTES:
1. Amber Flashing Beacon Assembly Must Have Remote Operation Capability.
2. All Regulatory Signs, Supplemental Plaques, and OM-5 Mounted to the Amber Flashing Beacon Assembly Shall be Incidental to Item No. 631.0700.
3. Amber Flashing Beacon Assembly Shall be Carmanah 829-MX, or Approved Equal.
4. Solar Panels Shall Face South.

SCHOOL SPEED LIMIT DUAL AMBER FLASHING BEACON DETAIL
Not to Scale

NOTE:
RRFB assembly shall be installed such that a level approach can be made to access the pushbutton, in accordance with PROWAG and MUTCD guidelines

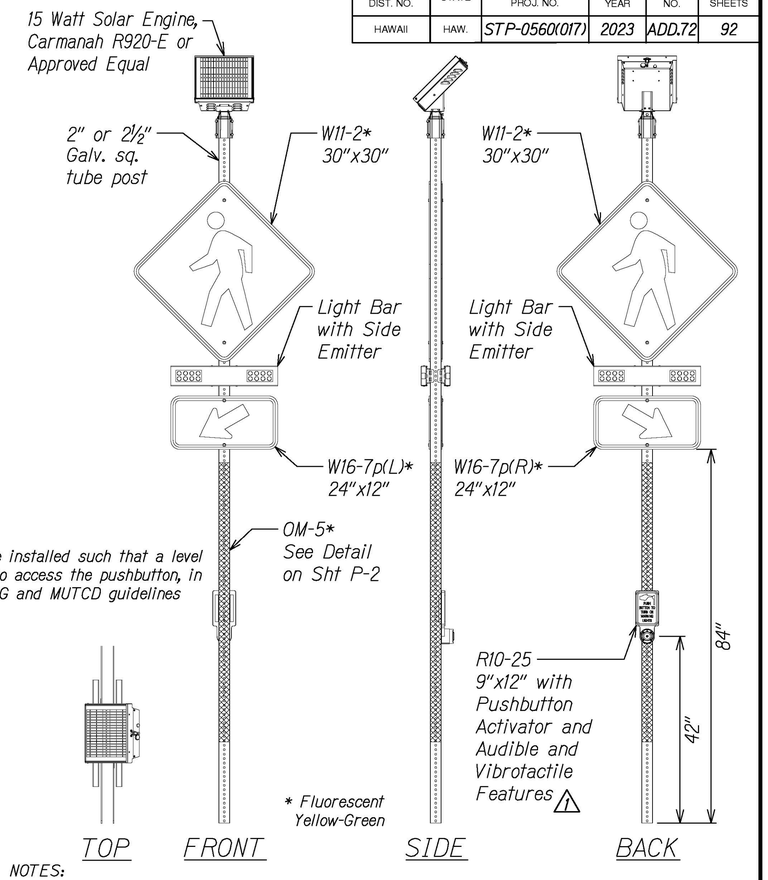

NOTES:
1. Use S1-1* (36"x36") in lieu of W11-2* at "Hanalei Elementary School" & "Wai'oli Church" Locations.
2. All Warning Signs, Supplemental Plaques, and OM-5 Mounted to the RRFB Assembly Shall be Incidental to Item No. 631.0500.
3. RRFB Assembly Shall be Carmanah R920-E, or Approved Equal.
4. Solar Panels Shall Face South.

RAPID RECTANGULAR-FLASHING BEACON (RRFB) DETAIL
Not to Scale

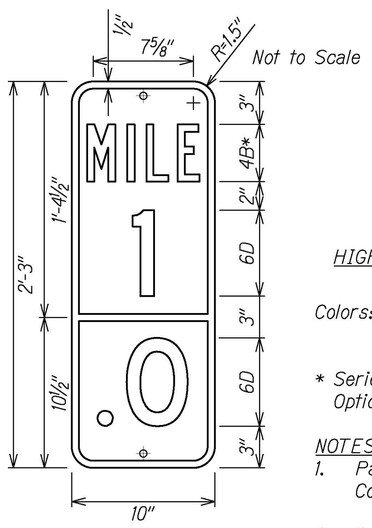

MILE POST SIGN

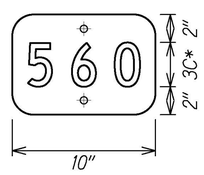

HIGHWAY ROUTE NUMBER PLATE

Colors: Legend: White
Background: Green

* Series 2000 Standard Alphabets
Optically Locate Numerals About Centerline

NOTES:
1. Payment for Highway Route Number Plate shall be Considered Incidental to the Mile Post Sign.
2. See TE-16 for Mile Post Plate Schedule

MILE POST SIGN & HIGHWAY ROUTE NUMBER PLATE DETAIL
Not to Scale

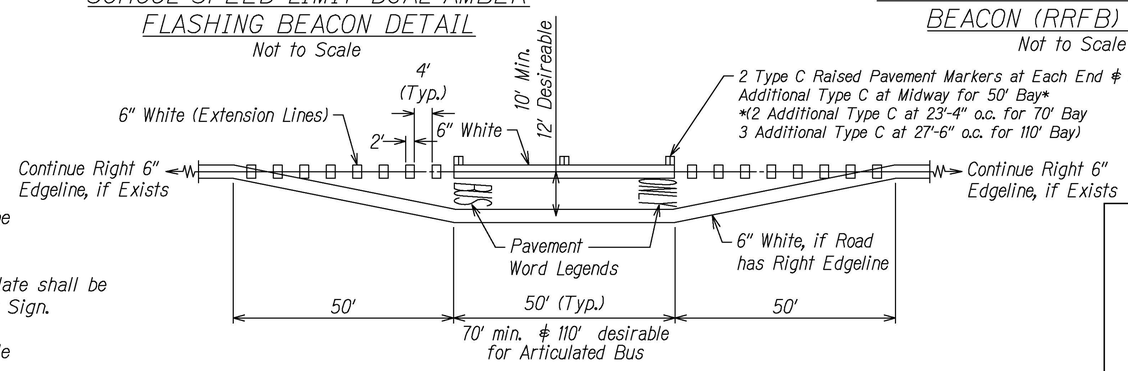

BUS BAY STRIPING DETAIL
Not to Scale

DATE	REVISION
10/12/23	1 - Revised Detail

SCOTT A. KUNODA
LICENSED PROFESSIONAL ENGINEER
No. 7257-C
HAWAII, U.S.A.
LICENSE EXPIRES 4/30/24
THIS WORK WAS PREPARED BY ME OR UNDER MY SUPERVISION LICENSE EXPIRES 4/30/24

STATE OF HAWAII
DEPARTMENT OF TRANSPORTATION
HIGHWAYS DIVISION

PAVEMENT MARKING NOTES & DETAILS

KUHIO HIGHWAY RESURFACING AND SAFETY IMPROVEMENTS
Route 560 M.P. 0.0 to M.P. 4.5
Fed. Aid Proj. No. STP-0560(017)

Scale: Not to Scale Date: July, 2023

SHEET No. P-3A OF 20 SHEETS

ORIGINAL PLAN | SURVEY PLOTTED BY | DRAWN BY | TRACED BY | DESIGNED BY | QUANTITIES BY | CHECKED BY | DATE | NOTE BOOK | No.

FED. ROAD DIST. NO.	STATE	FED. AID PROJ. NO.	FISCAL YEAR	SHEET NO.	TOTAL SHEETS
HAWAII	HAW.	STP-0560(017)	2023	ADD.75	92

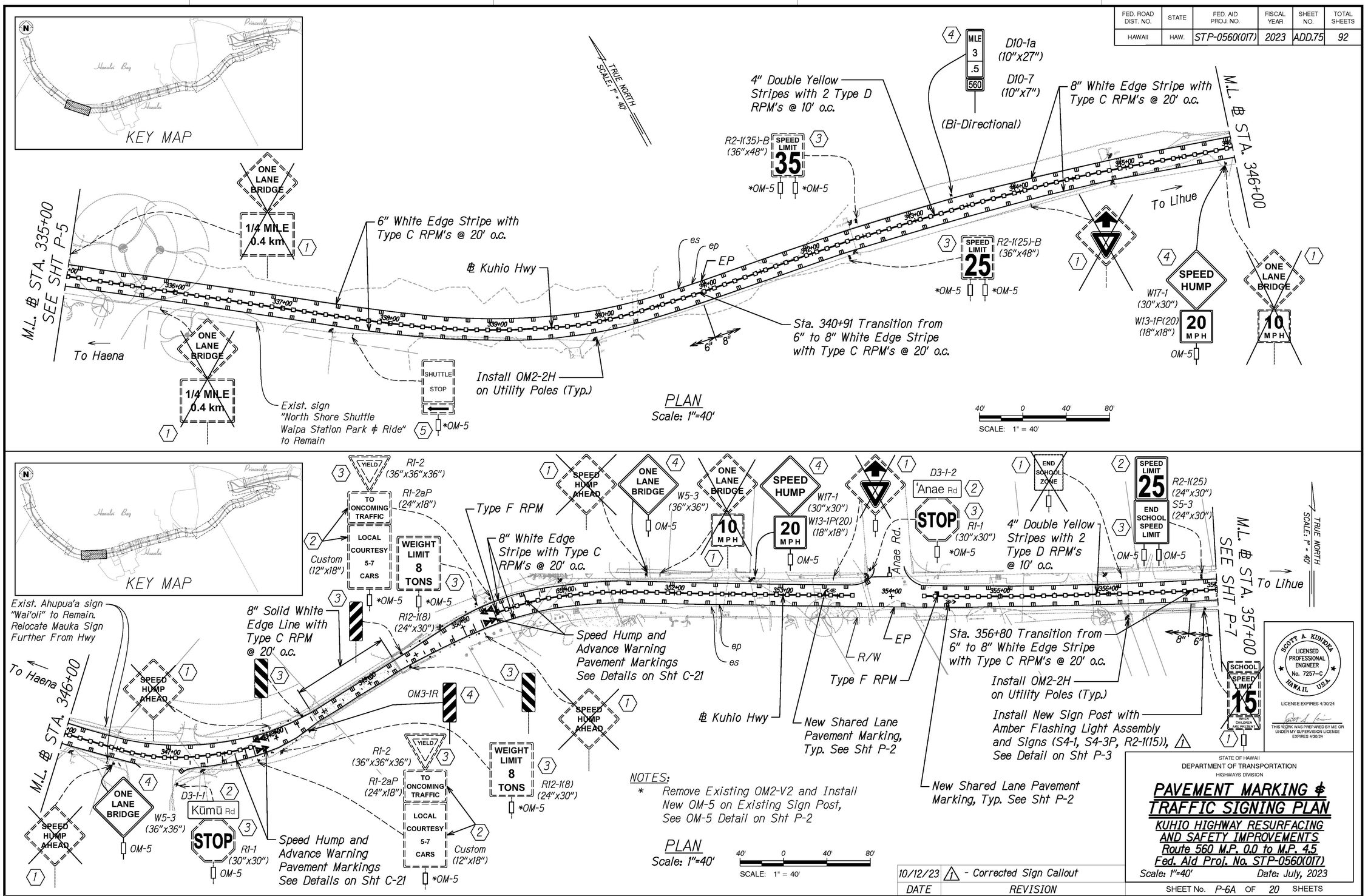

ADD. 75

FED. ROAD DIST. NO.	STATE	FED. AID PROJ. NO.	FISCAL YEAR	SHEET NO.	TOTAL SHEETS
HAWAII	HAW.	STP-0560(017)	2023	ADD.77	92

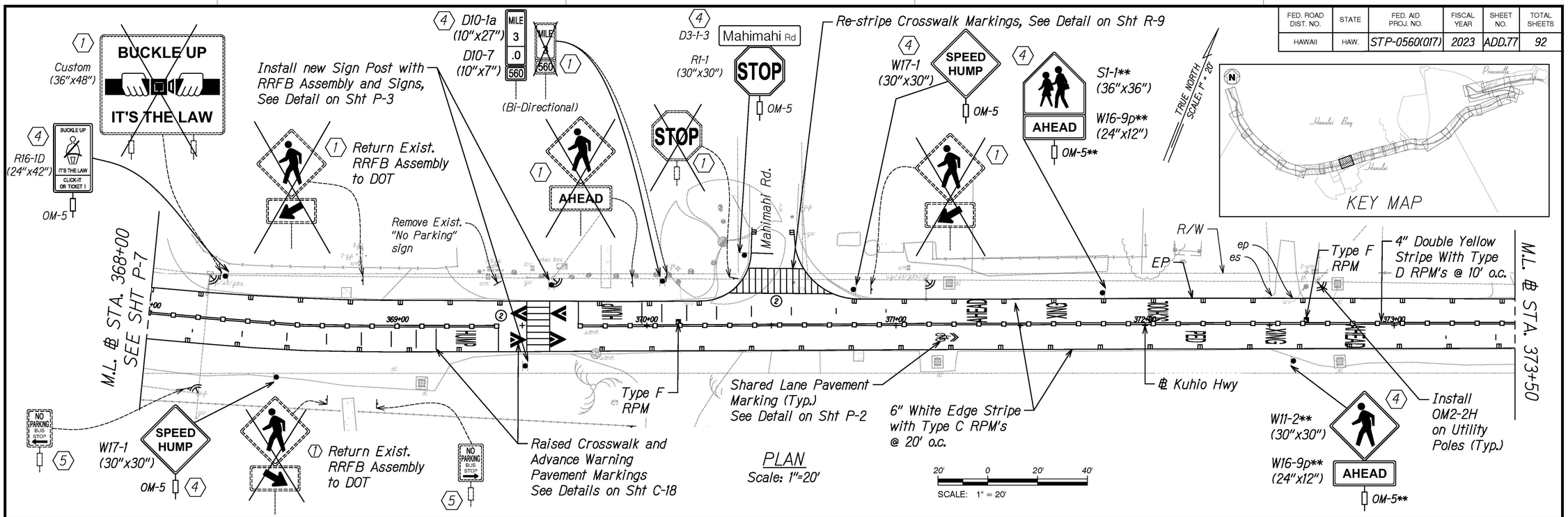

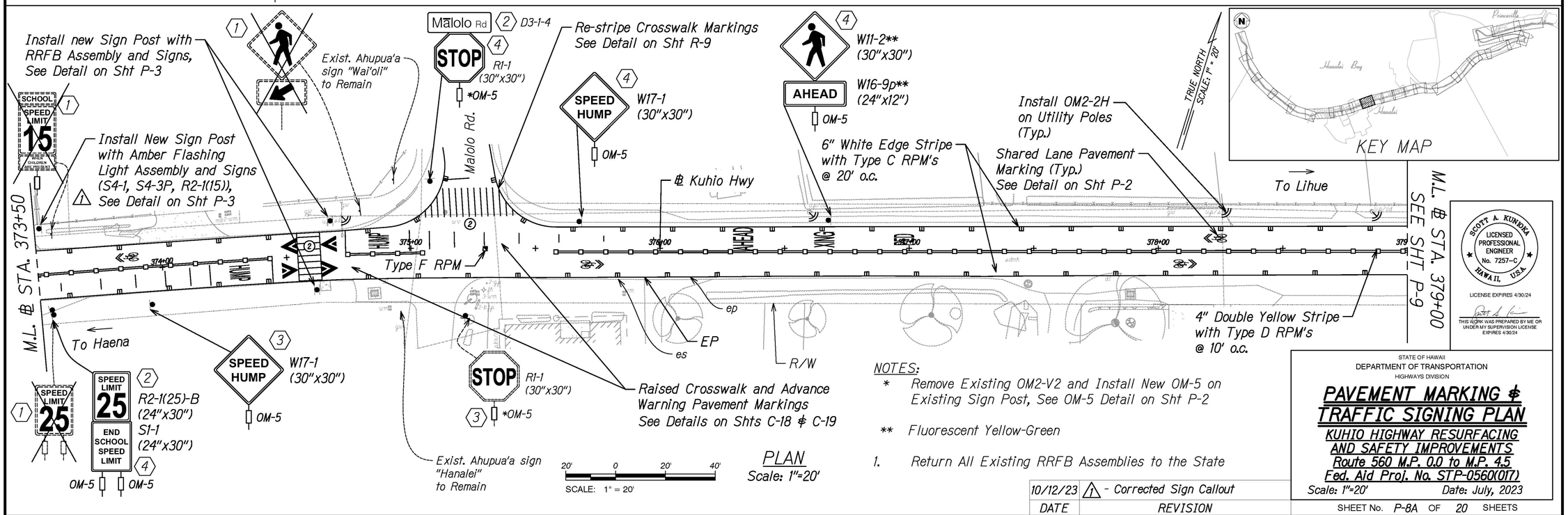

NOTES:

* Remove Existing OM2-V2 and Install New OM-5 on Existing Sign Post, See OM-5 Detail on Sht P-2

** Fluorescent Yellow-Green

1. Return All Existing RRFB Assemblies to the State

DATE	REVISION
10/12/23	1 - Corrected Sign Callout

SCOTT A. KUNOKA
LICENSED PROFESSIONAL ENGINEER
No. 7257-C
HAWAII, U.S.A.
LICENSE EXPIRES 4/30/24
THIS WORK WAS PREPARED BY ME OR UNDER MY SUPERVISION LICENSE EXPIRES 4/30/24

STATE OF HAWAII
DEPARTMENT OF TRANSPORTATION
HIGHWAYS DIVISION

PAVEMENT MARKING & TRAFFIC SIGNING PLAN

KUHIO HIGHWAY RESURFACING AND SAFETY IMPROVEMENTS

Route 560 M.P. 0.0 to M.P. 4.5
Fed. Aid Proj. No. STP-0560(017)

Scale: 1"=20' Date: July, 2023

SHEET No. P-8A OF 20 SHEETS

ADD. 77

ORIGINAL PLAN	SURVEY PLOTTED BY: DRAWN BY: TRACED BY: DESIGNED BY: REVIEWED BY: CHECKED BY:	DATE
NOTE BOOK No.		

FED. ROAD DIST. NO.	STATE	FED. AID PROJ. NO.	FISCAL YEAR	SHEET NO.	TOTAL SHEETS
HAWAII	HAW.	STP-0560(017)	2023	ADD.91	92

LEGEND

- Sign
- Cone Or Delineator
- Direction Of Traffic
- Work Area

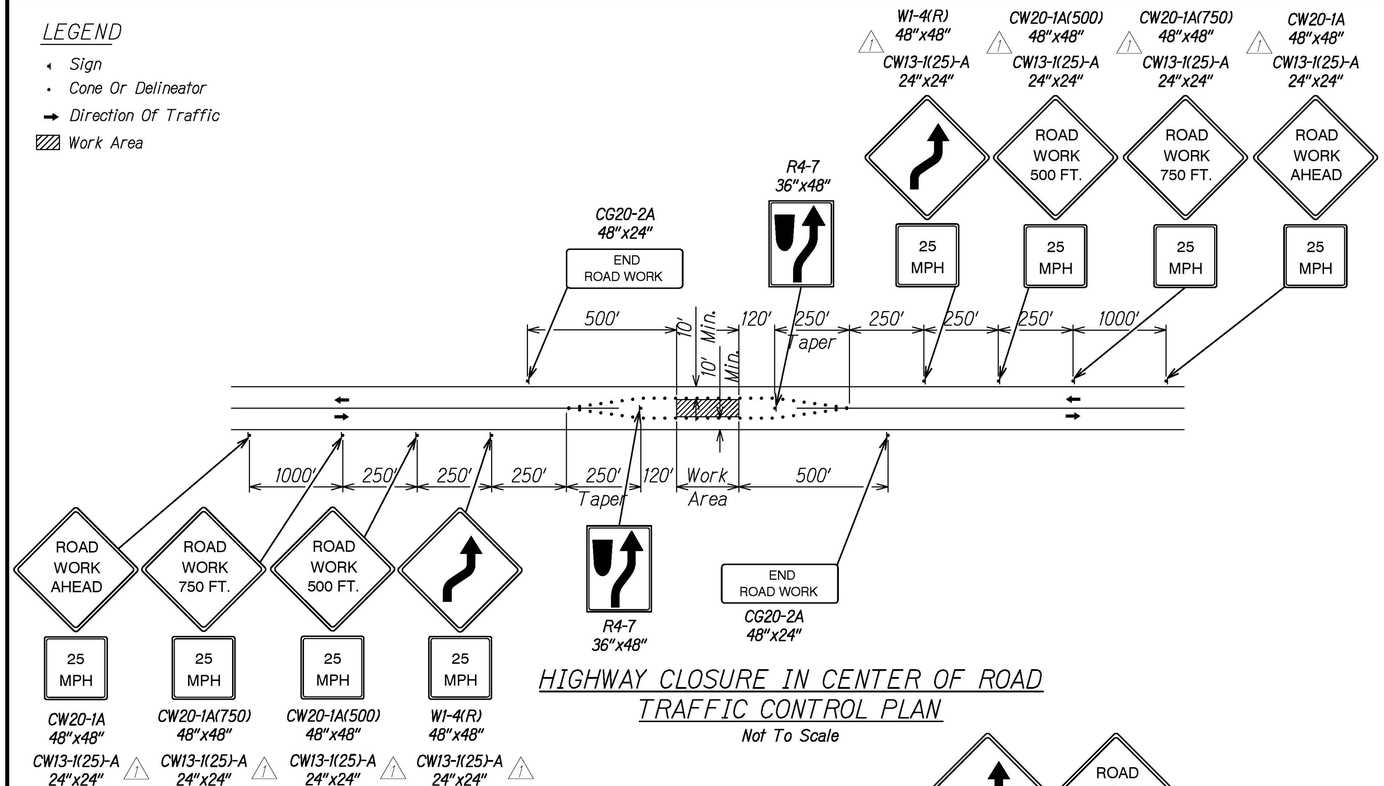

HIGHWAY CLOSURE IN CENTER OF ROAD
TRAFFIC CONTROL PLAN

Not To Scale

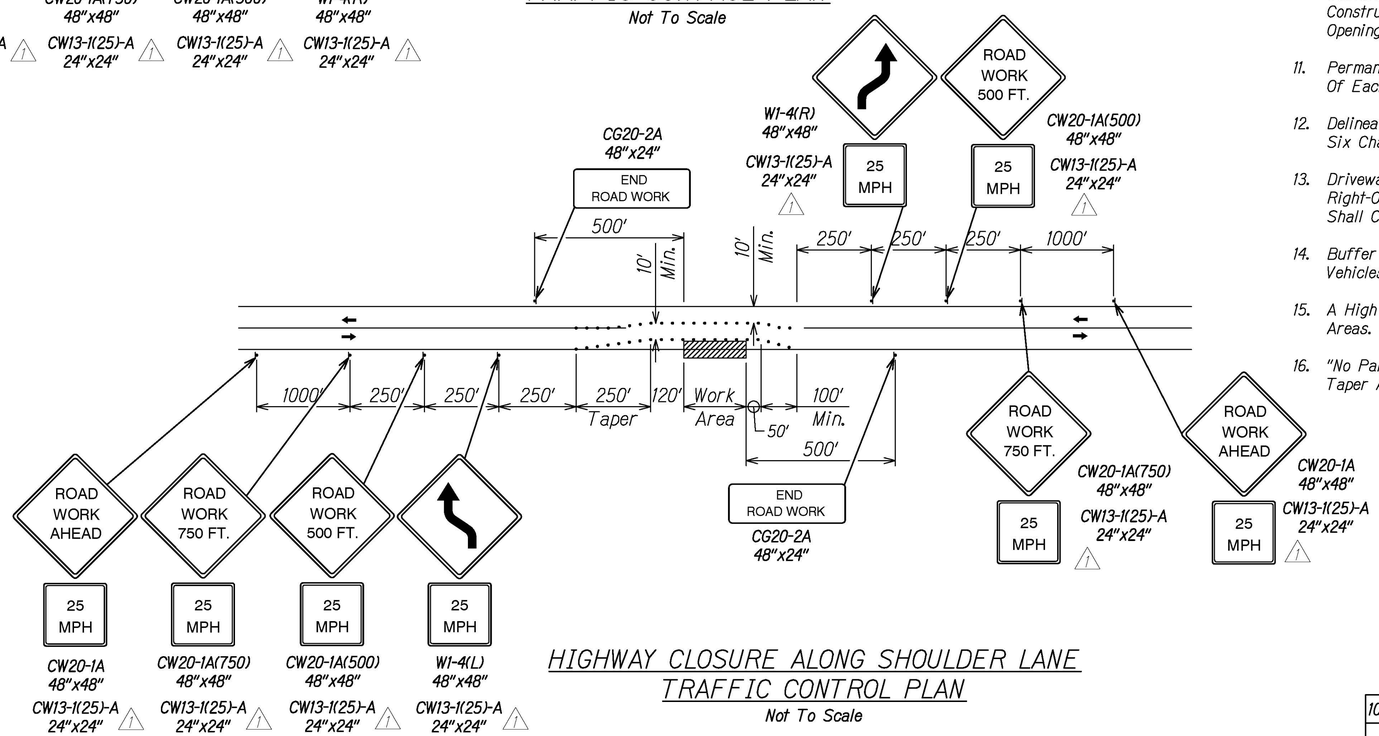

HIGHWAY CLOSURE ALONG SHOULDER LANE
TRAFFIC CONTROL PLAN

Not To Scale

GENERAL NOTES FOR TRAFFIC CONTROL PLAN

1. The Permittee Shall Make Minor Adjustments At Intersections, Driveways, Bridges, Structures, Etc., To Fit Field Conditions.
2. Delineators Shall Be Extended To A Point Where They Are Visible To Approaching Traffic.
3. Traffic Control Devices Shall Be Installed Such That The Sign Or Device Farthest From The Work Area Is Placed First. The Others Shall Then Be Placed Progressively Toward The Work Area.
4. Regulatory And Warning Signs Within The Construction Zone That Are In Conflict With The Traffic Control Plans Shall Be Removed Or Covered.
5. Flaggers And/Or Police Officers Shall Be In Sight Of Each Other Or In Direct Communication At All Times.
6. When Required By The Issuing Office, The Permittee Shall Install A Flashing Arrow Signal As Shown On The Traffic Control Plans.
7. All Traffic Lanes Shall Be A Minimum Of 10 Feet Wide.
8. All Construction Warning Signs Shall Be Promptly Removed Or Covered Whenever The Message Is Not Applicable Or Not In Use.
9. The Backs Of All Signs Used For Traffic Control Shall Be Appropriately Covered To Preclude The Display Of Inapplicable Sign Messages (i.e., When Signs Have Messages On Both Faces).
10. Lane Closure Shall Be Limited Only To The Extent Of Accomplishing Each Day's Work. As Soon As Each Day's Work Is Completed, The Permittee Shall Remove All Traffic Control Devices No Longer Needed To Permit Free And Safe Passage Of Public Traffic. Removal Shall Be In The Reverse Order Of Installation. Existing Faded Or Obliterated Pavement Markings That Are Necessary For Safe Traffic Flow In The Construction Area Shall Be Replaced With Temporary Or Permanent Markings Before Opening The Roadway To Public Traffic Each Day.
11. Permanent Pavement Markings And Traffic Signs Shall Be Replaced Upon Completion Of Each Phase Of Work.
12. Delineators Shall Be Spaced At A Maximum Distance Of 10 Feet Apart. A Minimum Of Six Channelizing Devices Shall Be Used For Each Taper Length.
13. Driveways Shall Be Kept Open Unless The Owners Of The Property Using The Right-Of-Way Are Otherwise Provided For Satisfactorily. Further, The Permittee Shall Control Traffic Going In And Out Of Driveways.
14. Buffer And Taper Areas On Approach To Any Work Area Shall Be Kept Clear Of Vehicles And Equipment.
15. A High Level Warning Device (Flag Tree) Shall Be Installed On Approach To All Work Areas.
16. "No Parking" Signs Shall Be Posted Within Any Work Area And For The Buffer And Taper Areas Approaching The Work Area.

SCOTT A. KUNIOKA
LICENSED PROFESSIONAL ENGINEER
No. 7257-C
HAWAII, U.S.A.

LICENSE EXPIRES 4/30/24

THIS WORK WAS PREPARED BY ME OR UNDER MY SUPERVISION LICENSE EXPIRES 4/30/24

DATE	REVISION
10/12/23	1 - Revised Advisory Speed

STATE OF HAWAII
DEPARTMENT OF TRANSPORTATION
HIGHWAYS DIVISION

TEMPORARY TRAFFIC CONTROL PLAN & NOTES

KUHIO HIGHWAY RESURFACING AND SAFETY IMPROVEMENTS
Route 560 M.P. 0.0 to M.P. 4.5
Fed. Aid Proj. No. STP-0560(017)

Scale: Not to Scale Date: July, 2023

SHEET No. TC-2A OF 3 SHEETS

ORIGINAL PLAN | SURVEY PLOTTED BY | DRAWN BY | TRACED BY | DESIGNED BY | QUANTITIES BY | CHECKED BY | DATE | NOTE BOOK | No.

ADD. 91

FED. ROAD DIST. NO.	STATE	FED. AID PROJ. NO.	FISCAL YEAR	SHEET NO.	TOTAL SHEETS
HAWAII	HAW.	STP-0560(017)	2023	ADD.92	92

LEGEND

- Sign
- Cone Or Delineator
- Direction Of Traffic
- Work Area
- Portable Message Board
- Type III Barricade
- Flagman

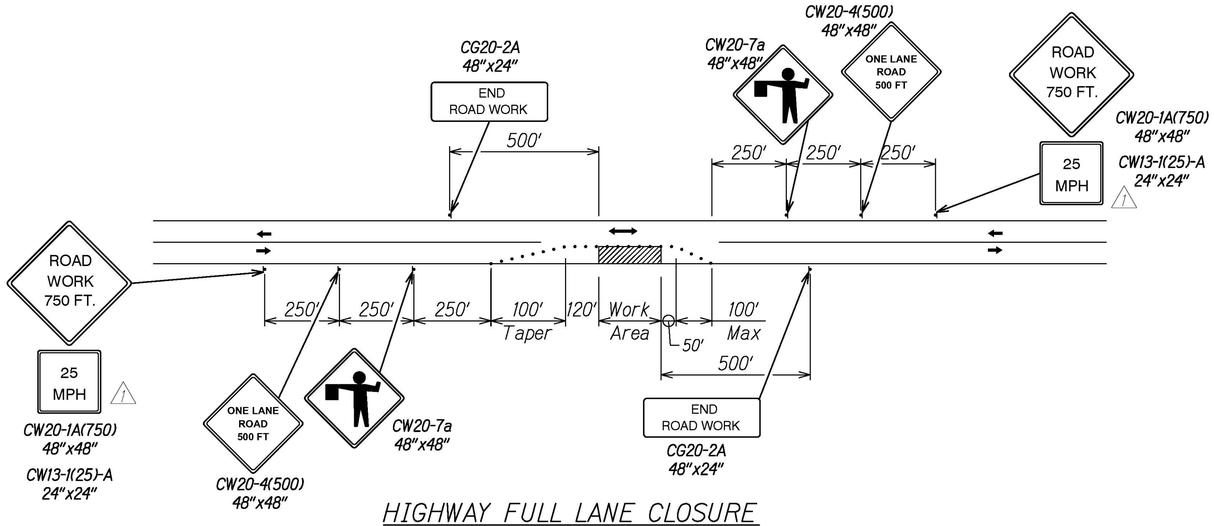

HIGHWAY FULL LANE CLOSURE TRAFFIC CONTROL PLAN

Not To Scale

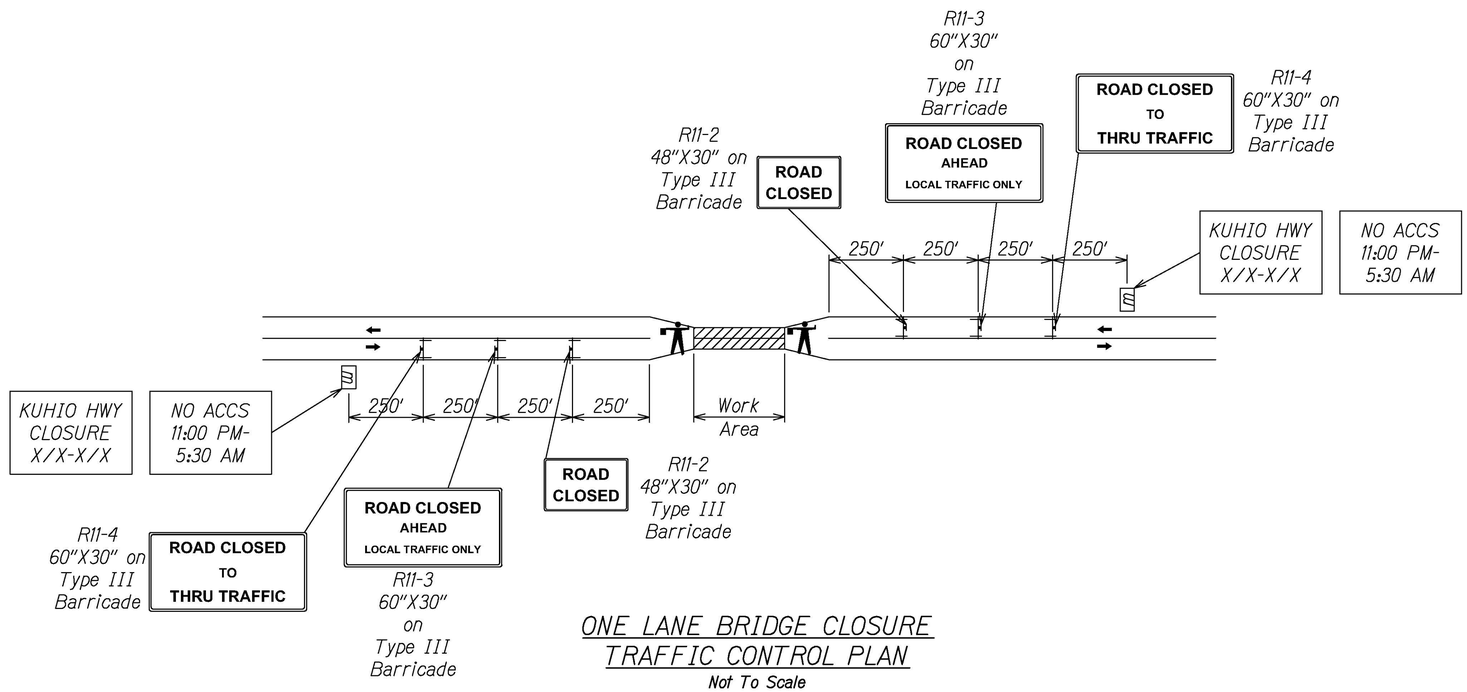

ONE LANE BRIDGE CLOSURE TRAFFIC CONTROL PLAN

Not To Scale

DATE	REVISION
10/12/23	1 - Revised Advisory Speed

SCOTT A. KUNOKA
LICENSED PROFESSIONAL ENGINEER
No. 7257-C
HAWAII, U.S.A.

LICENSE EXPIRES 4/30/24

THIS WORK WAS PREPARED BY ME OR UNDER MY SUPERVISION LICENSE EXPIRES 4/30/24

STATE OF HAWAII
DEPARTMENT OF TRANSPORTATION
HIGHWAYS DIVISION

TEMPORARY TRAFFIC CONTROL PLAN & NOTES

KUHIO HIGHWAY RESURFACING AND SAFETY IMPROVEMENTS
Route 560 M.P. 0.0 to M.P. 4.5
Fed. Aid Proj. No. STP-0560(017)

Scale: Not to Scale Date: July, 2023

SHEET No. TC-3A OF 3 SHEETS

ORIGINAL PLAN | NOTE BOOK No. | SURVEY PLOTTED BY | DRAWN BY | TRACED BY | DESIGNED BY | QUANTITIES BY | CHECKED BY | DATE

ADD. 92