FED. ROAD DIST. NO.	STATE	PROJ. NO.	FISCAL YEAR	SHEET NO.	TOTAL SHEETS
HAWAII	HAW.	560A-02-96M	1996	25	25

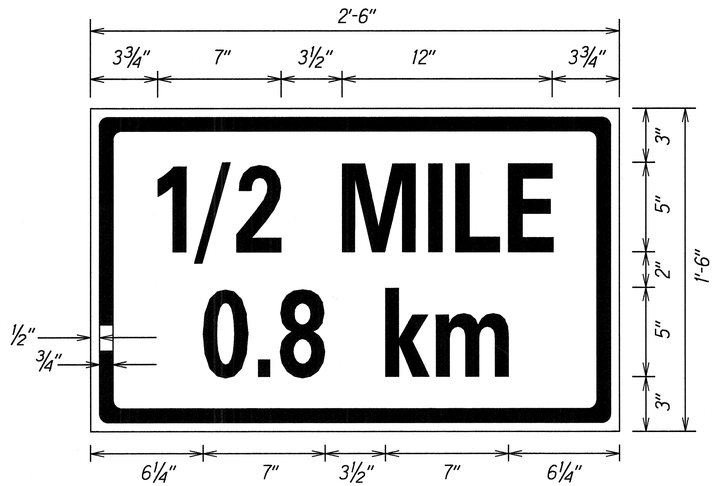

NOTE:
1. All letters are Series C
2. Black Legend and Border on yellow background

W5-3a(½)
Scale: 3"=1'

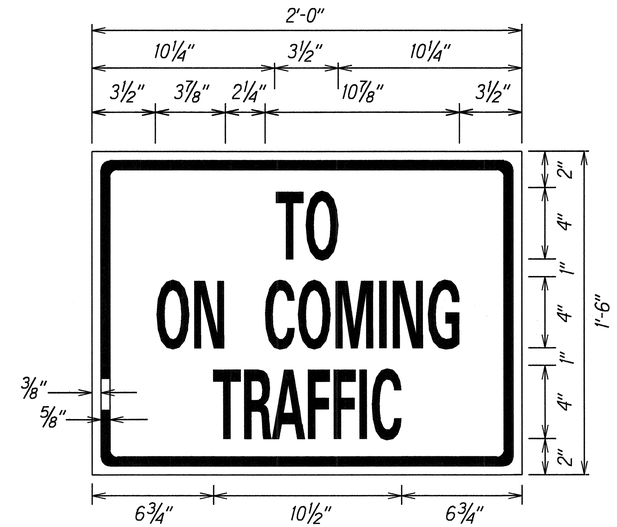

NOTE:
1. All letters are Series B
2. Black Legend and Border on yellow background

I-11
Scale: 3"=1'

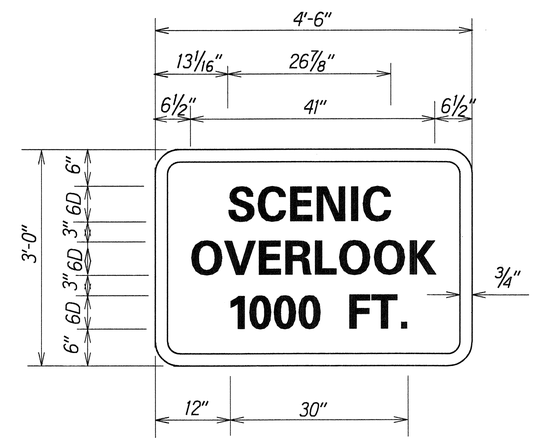

D-3
Not To Scale

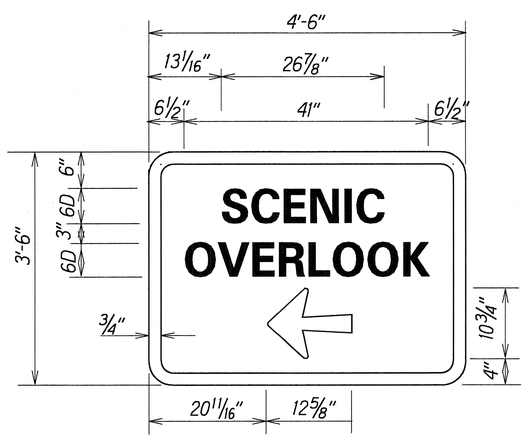

D-1
Not To Scale

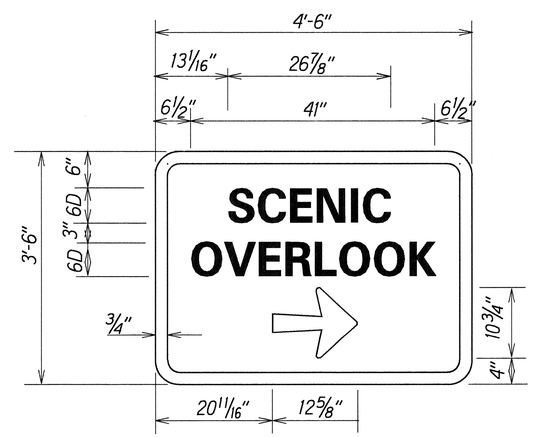

D-2
Not To Scale

NOTE: 1. For D-1, D-2, D-3, Sign Posts shall be 2-Flanged Channel (4.00 lbs/ft).
2. White Legend and Border on Blue Background.

STATE OF HAWAII
DEPARTMENT OF TRANSPORTATION
HIGHWAYS DIVISION

SIGN DETAILS

KUHIO HIGHWAY RESURFACING
Hanalei Town To Priceville
Project No. 560A-02-96M

Scale: As Shown Date: April, 1996

SHEET No. 1 OF 1 SHEETS

ORIGINAL PLAN
SURVEY PLOTTED BY
DRAWN BY X
TRACED BY
DESIGNED BY HW-K
QUANTITIES BY
CHECKED BY
DATE X
NOTE BOOK
Ke-2 Gary
No. Adams