FED. ROAD DIST. NO.	STATE	PROJ. NO.	FISCAL YEAR	SHEET NO.	TOTAL SHEETS
HAWAII	HAW.	56D-03-82	1982	2	5

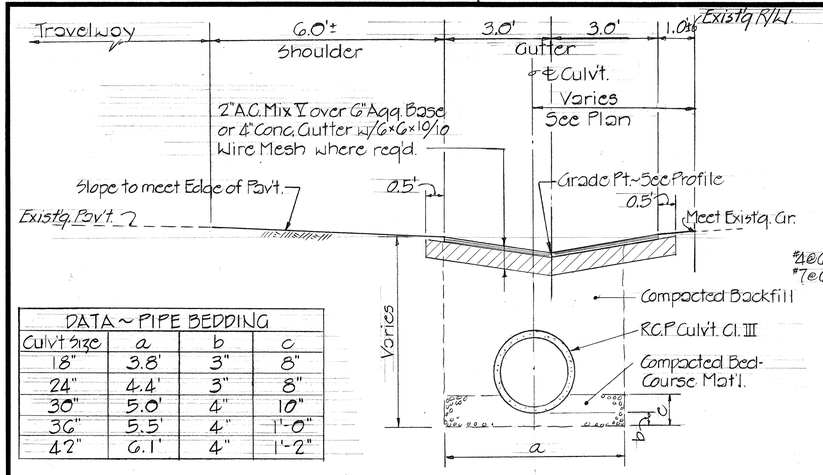

DATA ~ PIPE BEDDING			
Culvt Size	a	b	c
18"	3.8'	3"	8"
24"	4.4'	3"	8"
30"	5.0'	4"	10"
36"	5.5'	4"	1'-0"
42"	6.1'	4"	1'-2"

TYPICAL SECTION ~ SHOULDER, GUTTER & CULVERT

Scale: 1/2"=1'-0"

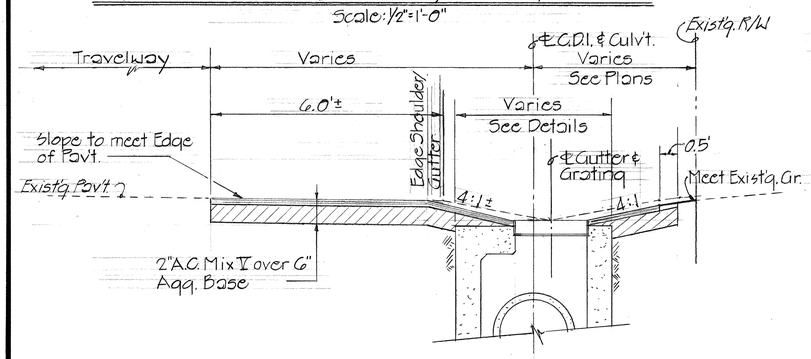

TYPICAL SECTION ~ DRAINAGE DEPRESSION

Scale: 1/2"=1'-0"

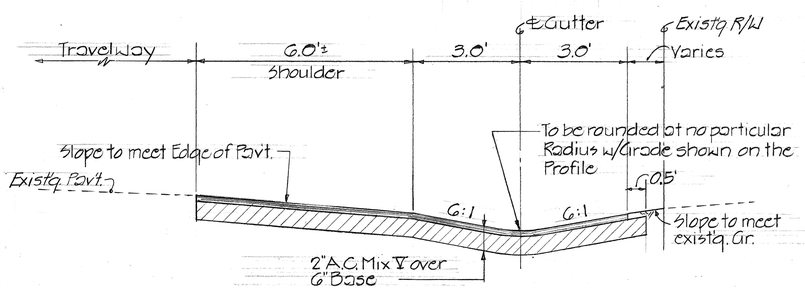

TYPICAL SECTION ~ SIDE ROAD APPROACHES

Scale: 1/2"=1'-0"

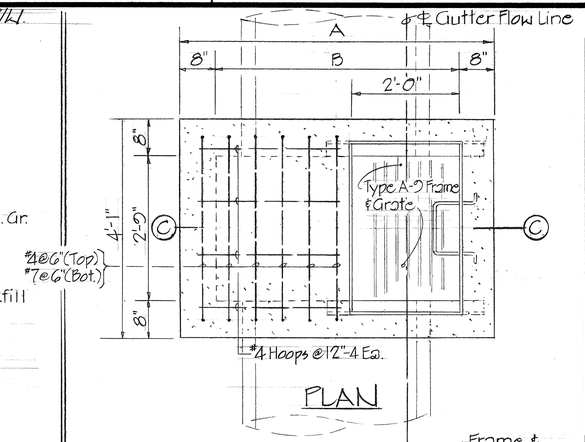

PLAN

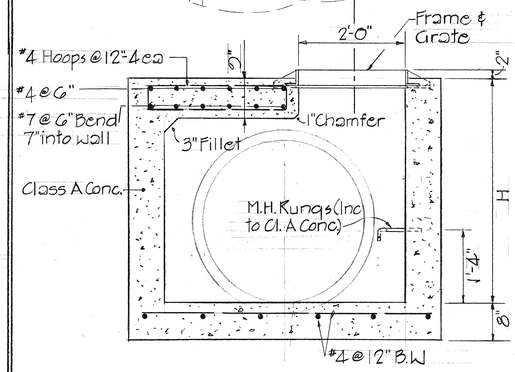

SECTION "C"-"C"

DETAILS ~ C.D.I.

Scale: 3/4"=1'-0"

DATA FOR C.D.I.			
	Sta.	A	B	H
8+50.6	~~8+47.5~~	4'-4"	3'-0"	3'-5 1/4"
12+84.5	~~12+83.3~~	5'-4"	4'-0"	4'-0 1/2"
	15+02.±7	5'-10	4'-6"	4'-1 1/2"

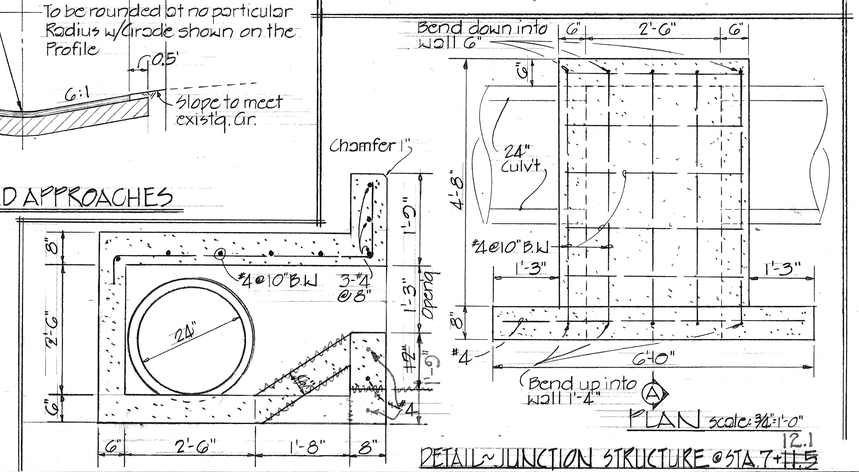

PLAN

Scale: 3/4"=1'-0"

SECTION "A"

Scale: 3/4"=1'-0"

DETAIL ~ JUNCTION STRUCTURE @ STA. 7+~~11.5~~ 12.1

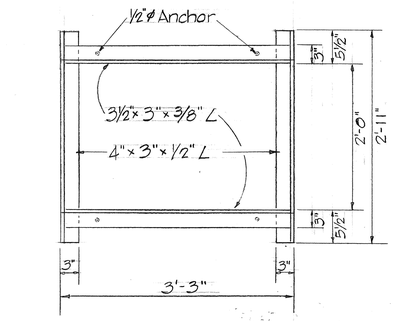

PLAN

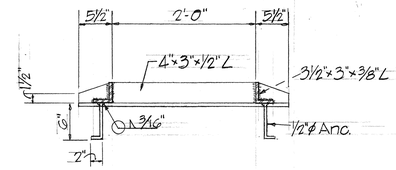

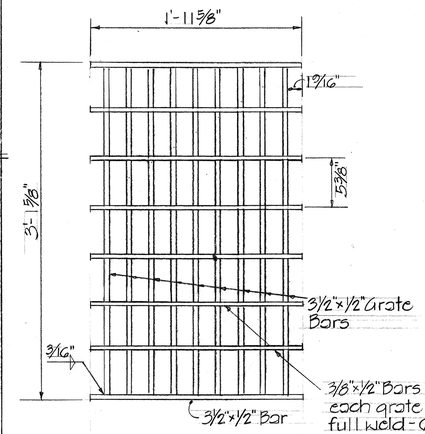

DETAILS ~ GRATING

Scale: 1/2"=1'-0"

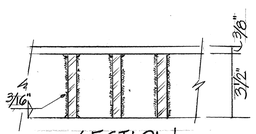

SECTION

N.T.S.

DETAILS ~ TYPE A-9 FRAME & GRATE (MODIFIED)

GENERAL NOTES:

1- Prior to commencing construction, the contractor shall request the Department of Water to locate all existing pipelines. Any pipeline broken because of the contractors operations shall be repaired at the contractors own expense.

2- The cost of demolishing and subsequent backfilling required shall be considered incidental to various contract items of work.

3- The contractor shall conduct his operation in a responsible manner such that the roadway will be able to drain at all times and at no time shall the capacity to drain be less than existing conditions.

4- Embankment material will not be paid for separately but shall be considered incidental to Culvert Pipe.

5- Existing shoulder shall be trimmed and dressed. Trimming and dressing shall include but not limited to clearing, grubbing, backfilling, grading and compacting shoulder area. This work shall not be paid for directly but shall be considered incidental to various contract items.

6- Any damage to the existing pavement section by the contractor shall be repaired at his own expense and to the satisfaction of the Engineer.

7- No material or equipment shall be stockpiled or parked within the Highway Rights-of-Way except at locations designated by the Engineer.

8- All reinforcing bars required for C.D.I., junction structure & headwall shall not be paid for separately but shall be considered incidental to "Class A Concrete for Drainage System".

9- Existing 30-inch R.C.P. to be removed and salvaged shall be cleaned, delivered and stockpiled at the Kapaa Baseyard. This work shall not be paid for separately but shall be considered incidental to "Removing, Salvaging and Stockpiling of Existing 30-inch Reinforced Concrete Pipe." Any pipes damaged during removal work shall be replaced at the contractors expense.

STATE OF HAWAII
DEPARTMENT OF TRANSPORTATION
HIGHWAYS DIVISION

KUHIO HIGHWAY, SAFETY AND DRAINAGE IMPROVEMENTS AT HANALEI TOWN-PHASE II

PROJ. NO. 56D-03-82

DETAILS & GENERAL NOTES

Scale: As Shown. Feb 1982

SHEET No. OF SHEETS

ORIGINAL PLAN	SURVEY PLOTTED BY	DATE
	DRAWN BY	"
	TRACED BY	"
NOTE BOOK	DESIGNED BY	"
	QUANTITIES BY	"
No.	CHECKED BY	"