FED. ROAD DIST. NO.	STATE	FED. AID PROJ. NO.	FISCAL YEAR	SHEET NO.	TOTAL SHEETS
HAWAII	HAW.	STP-0540(2)	2004	19	23

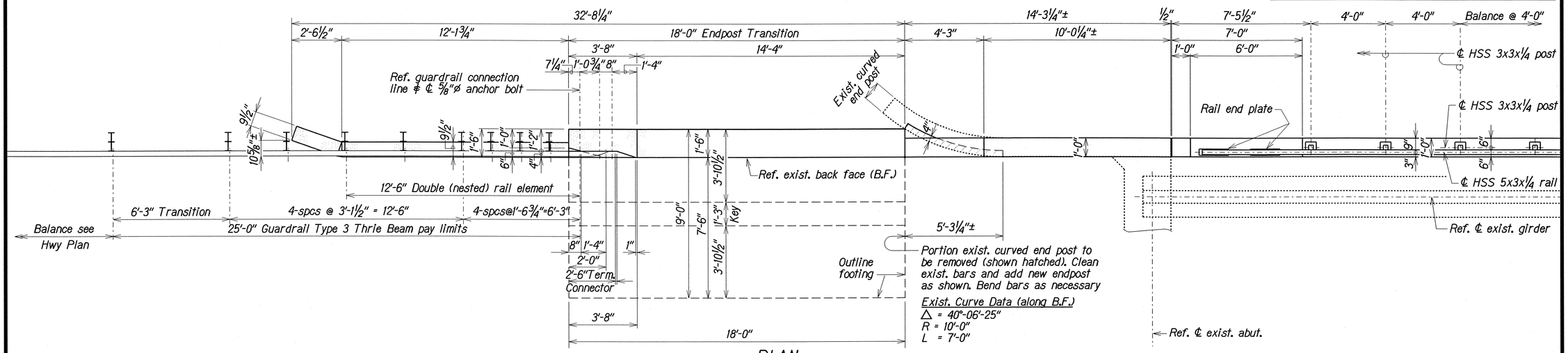

PLAN

Scale: ⅜" = 1'-0"

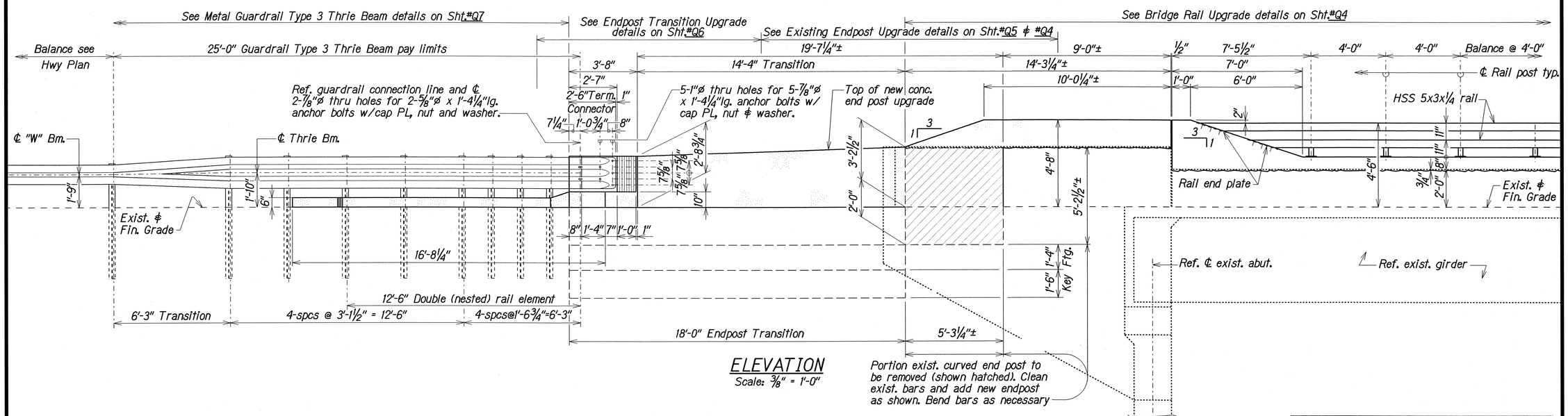

ELEVATION

Scale: ⅜" = 1'-0"

ORIGINAL PLAN	SURVEY PLOTTED BY KSG	DATE
	DRAWN BY	
	TRACED BY	MAY 2003
NOTE BOOK	DESIGNED BY DKT	MAY 2003
N:\hlw_q3.dgn	QUANTITIES BY DKT	MAY 2003
	CHECKED BY FYS	MAY 2003

dgn4/usr2/ksg/dkt/halewili/

BRIDGE RAIL UPGRADE and ENDPOST TRANSITION UPGRADE DETAILS
WAHIAWA STREAM BRIDGE

STATE OF HAWAII
DEPARTMENT OF TRANSPORTATION
HIGHWAYS DIVISION

BRIDGE RAIL UPGRADE and ENDPOST TRANSITION UPGRADE DETAILS
WAHIAWA STREAM BRIDGE
HALEWILI ROAD
Guardrail and Shoulder Improvements
Federal Aid Project No. STP-0540(2)

Scale: As Noted — Date: Jun. 2003

SHEET No. Q3 OF 7 SHEETS