FED. ROAD DIST. NO.	STATE	FED. AID PROJ. NO.	FISCAL YEAR	SHEET NO.	TOTAL SHEETS
HAWAII	HAW.	STP-058-1(2)	1992	6	17

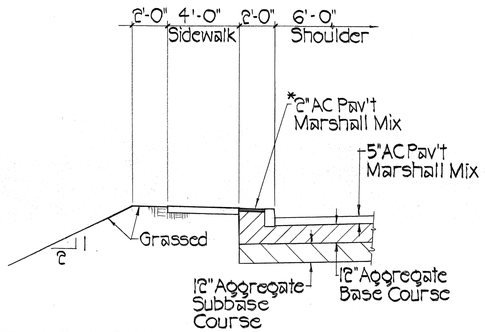

TYPICAL SECTION W/ CONCRETE CURB & SIDEWALK

Scale: 1/4" = 1'-0"

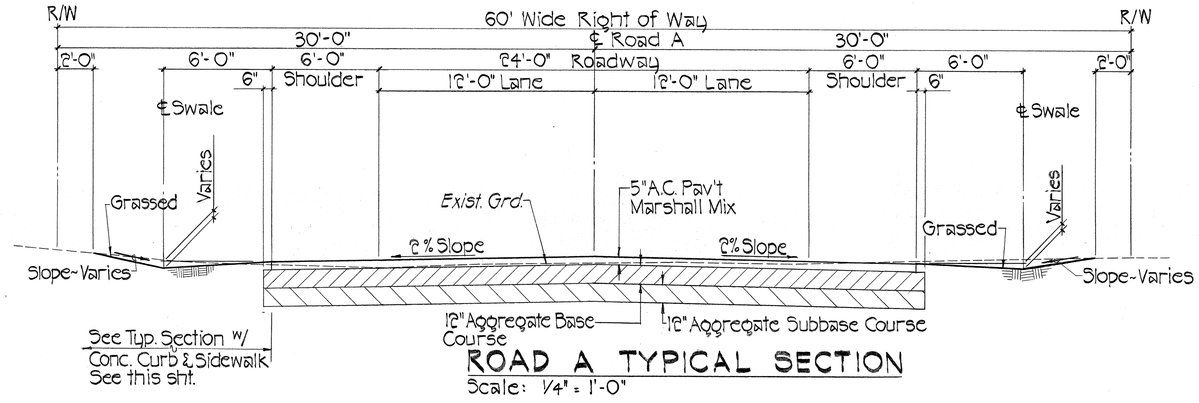

ROAD A TYPICAL SECTION

Scale: 1/4" = 1'-0"

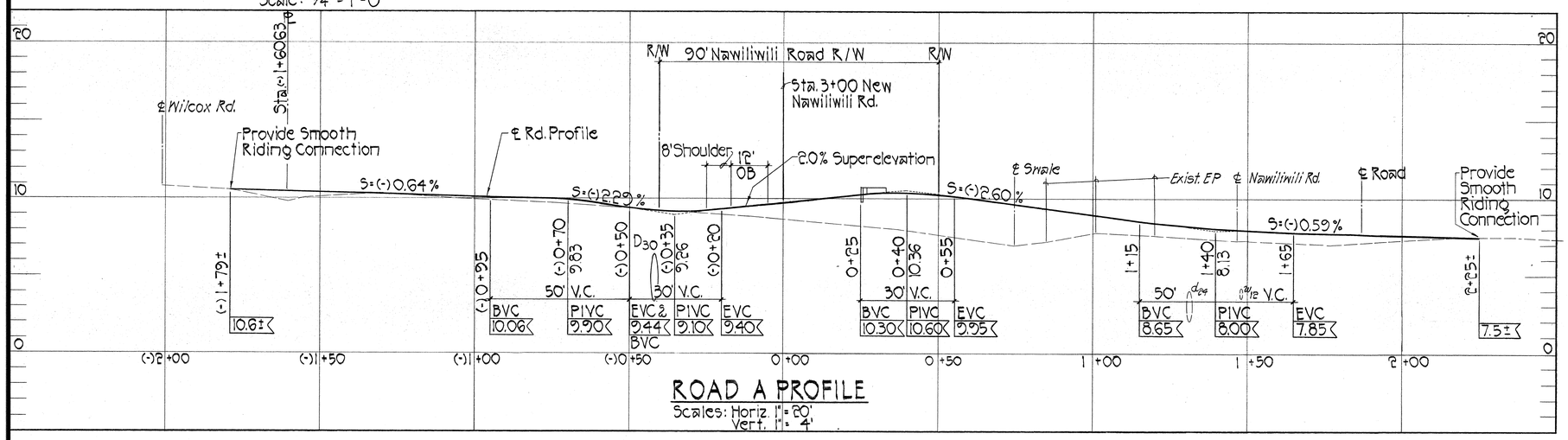

ROAD A PROFILE

Scales: Horiz. 1" = 20'
Vert. 1" = 4'

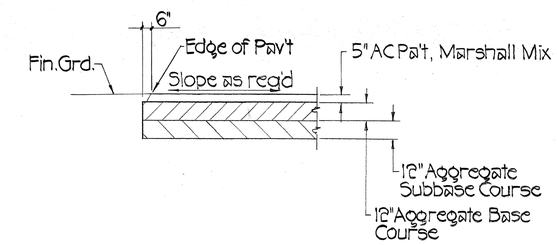

TYPICAL AC PAVEMENT SECTION

Scale: 1/4" = 1'-0"

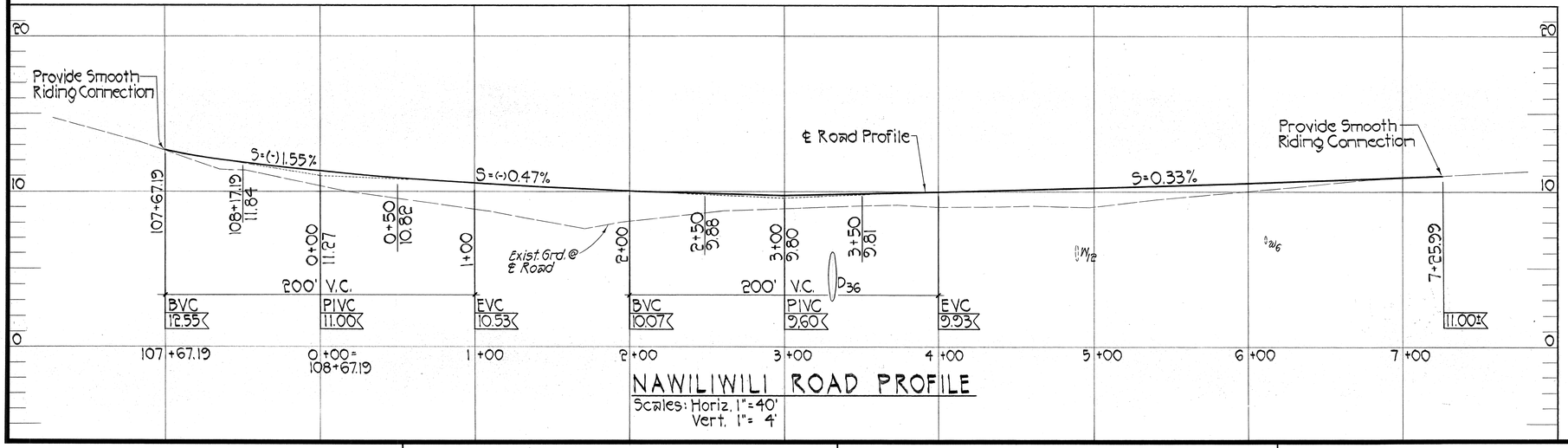

NAWILIWILI ROAD PROFILE

Scales: Horiz. 1" = 40'
Vert. 1" = 4'

DATE	REVISION
5/27/92	*Add. 2" AC Pav't

STATE OF HAWAII
DEPARTMENT OF TRANSPORTATION
HIGHWAYS DIVISION

ROAD PROFILES

WAAPA ROAD & NAWILIWILI ROAD
INTERSECTION IMPROVEMENTS
F.A. PROJECT NO. STP-058-1(2)

SCALE: AS NOTED DATE: MARCH 1992

SHEET No. 1 OF 1 SHEETS

HAROLD I. YOSHIZAKI
REGISTERED PROFESSIONAL ENGINEER
No. 2091-C
HAWAII, U.S.A.

THIS WORK WAS PREPARED BY ME OR UNDER MY SUPERVISION.
Harold I. Yoshizaki
SHIMABUKURO, ENDO & YOSHIZAKI, INC.
1126 12th Avenue
Honolulu, Hawaii 96816

ORIGINAL PLAN | NOTE BOOK No. | SURVEY PLOTTED BY | DRAWN BY | TRACED BY | DESIGNED BY | QUANTITIES BY | CHECKED BY | DATE

ADD. 6