FED. ROAD DIST. NO.	STATE	FED. AID PROJ. NO.	FISCAL YEAR	SHEET NO.	TOTAL SHEETS
HAWAII	HAW.	STP-056-1(49)	2006	25	31

NOTE:
INSTALL RAIL PARALLEL TO ROADWAY EDGE LINE. WHEN TAPER IS REQUIRED BY DESIGN ENGINEER, A 50:1 TAPER OVER THE LENGTH OF SYSTEM IS ALLOWABLE.

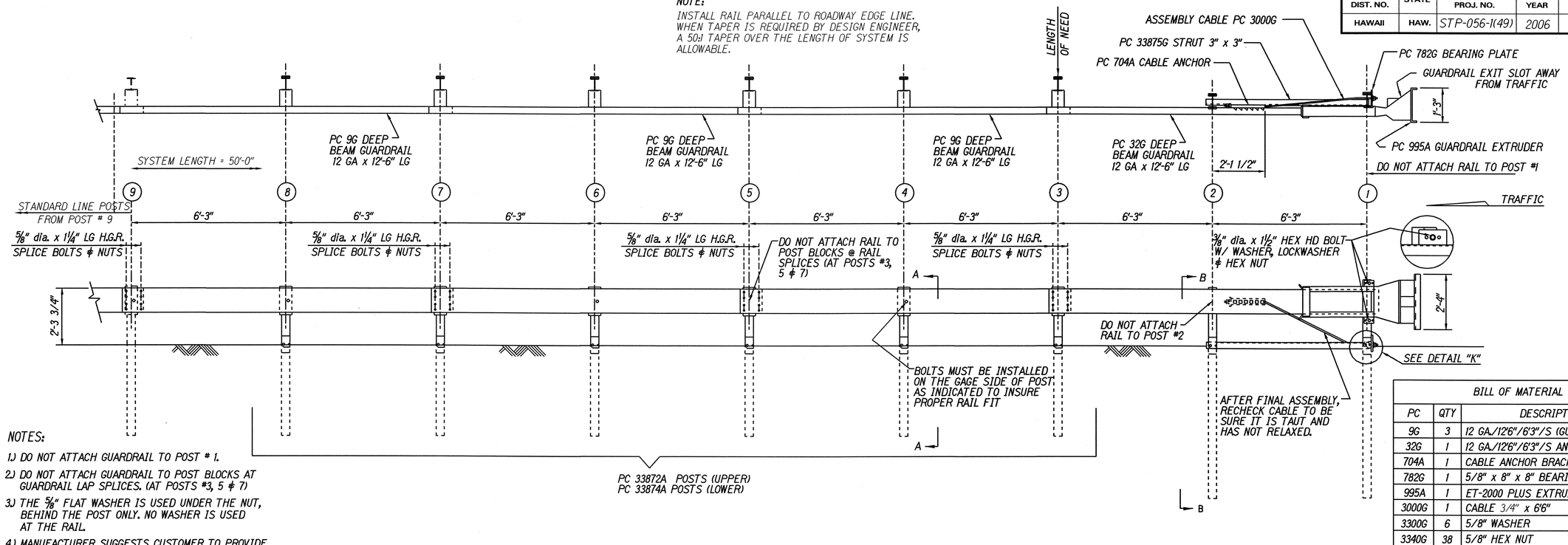

NOTES:

1.) DO NOT ATTACH GUARDRAIL TO POST # 1.

2.) DO NOT ATTACH GUARDRAIL TO POST BLOCKS AT GUARDRAIL LAP SPLICES. (AT POSTS #3, 5 & 7)

3.) THE 5/8" FLAT WASHER IS USED UNDER THE NUT, BEHIND THE POST ONLY. NO WASHER IS USED AT THE RAIL.

4.) MANUFACTURER SUGGESTS CUSTOMER TO PROVIDE REFLECTORIZATION OF TERMINAL.

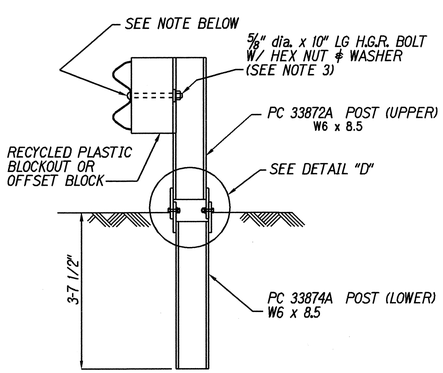

NOTE:
SECTION "A-A" IS SIMILAR @ POST #3, 5 & 7. EXCEPT RAIL IS NOT ATTACHED.

SECTION "A-A"
(TYP @ POSTS #4, 6 & 8)

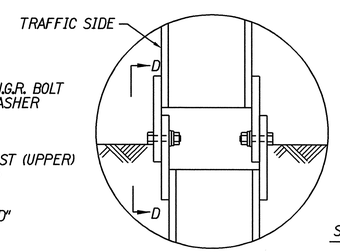

DETAIL "D"

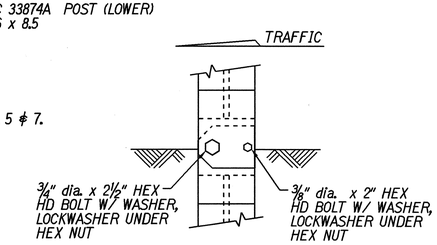

VIEW "D-D"

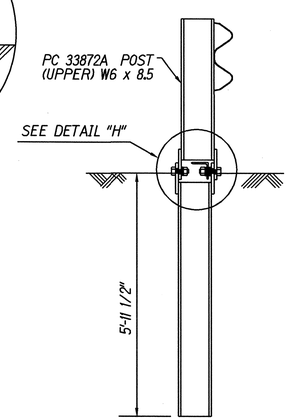

SECTION "B-B"
(POST #2)

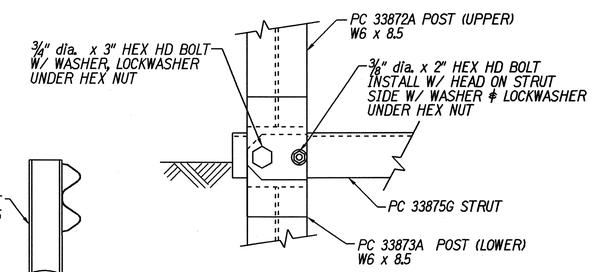

VIEW "H-H"

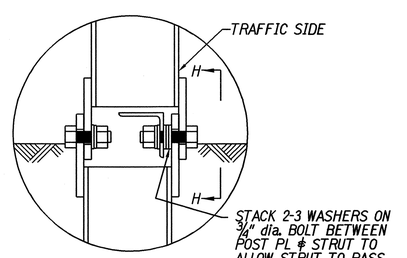

DETAIL "H"
(POST #2)

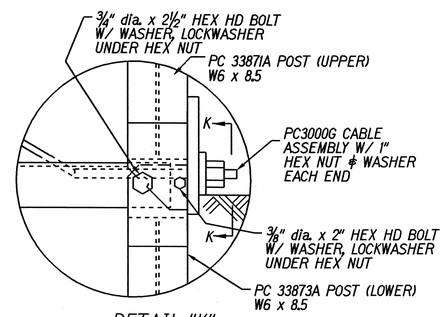

DETAIL "K"
(POST #1)

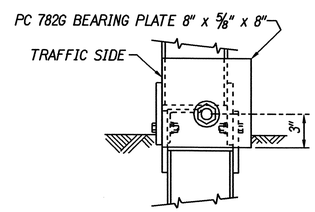

VIEW "K-K"

BILL OF MATERIAL

PC	QTY	DESCRIPTION
9G	3	12 GA./12'6"/6'3"/S (GUARDRAIL)
32G	1	12 GA./12'6"/6'3"/S ANC (GUARDRAIL)
704A	1	CABLE ANCHOR BRACKET
782G	1	5/8" x 8" x 8" BEARING PLATE
995A	1	ET-2000 PLUS EXTRUDER
3000G	1	CABLE 3/4" x 6'6"
3300G	6	5/8" WASHER
3340G	38	5/8" HEX NUT
3360G	32	5/8" dia. x 1 1/4" SPLICE BOLT
3500G	6	5/8" dia. x 10" POST BOLT
3701G	19	3/4" WASHER
3704G	16	3/4" HEX NUT
3717G	15	3/4" dia. x 2 1/2" HEX HD BOLT
3718G	1	3/4" dia. x 3" HEX HD BOLT
3900G	2	1" WASHER
3910G	2	1" HEX NUT
5326B	6	RECYCLED PLASTIC BLOCKOUT OR OFFSET BLOCK
4254G	18	3/8" WASHER
4255G	2	3/8" FENDER WASHERS
4258G	16	3/8" LOCKWASHER
4261G	2	3/8" dia. x 1 1/2" HEX HD BOLT
4699G	16	3/4" LOCKWASHER
6321G	16	3/8" dia. x 2" HEX HD BOLT
6405G	18	3/8" HEX NUT
33871A	1	ET2000 HBA POST #1 TOP
33872A	7	ET2000 HBA POST #2-#8 TOP
33873A	2	ET2000 HBA POST #1-#2 BOTTOM
33874A	6	ET2000 HBA POST #3-#8 BOTTOM
33875G	1	6'-6" ANGLE STRUT ET HBA

ORIGINAL PLAN	SURVEY PLOTTED BY	DATE
	DRAWN BY X	
	TRACED BY X	
NOTE BOOK	DESIGNED BY X	
1601-3700	QUANTITIES BY	
7/07/2005	CHECKED BY	
No.		

STATE OF HAWAII
DEPARTMENT OF TRANSPORTATION
HIGHWAYS DIVISION

ET-2000 PLUS

KUHIO HIGHWAY
Guardrail and Shoulder Improvements at Various Locations
Fed. Aid Project No. STP-056-1(49)

Scale: Not to Scale Date: Oct. 2005

SHEET No. 6 OF 6 SHEETS