FED. ROAD DIST. NO.	STATE	PROJ. NO.	FISCAL YEAR	SHEET NO.	TOTAL SHEETS
HAWAII	HAW.	56A-01-97	1998	5	8

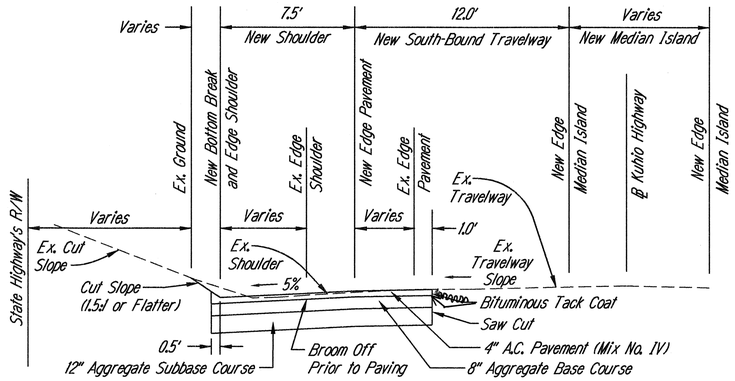

TYPICAL PAVEMENT RECONSTRUCTION
SECTION NORTH SHOULDER

Scale: 1" = 4'

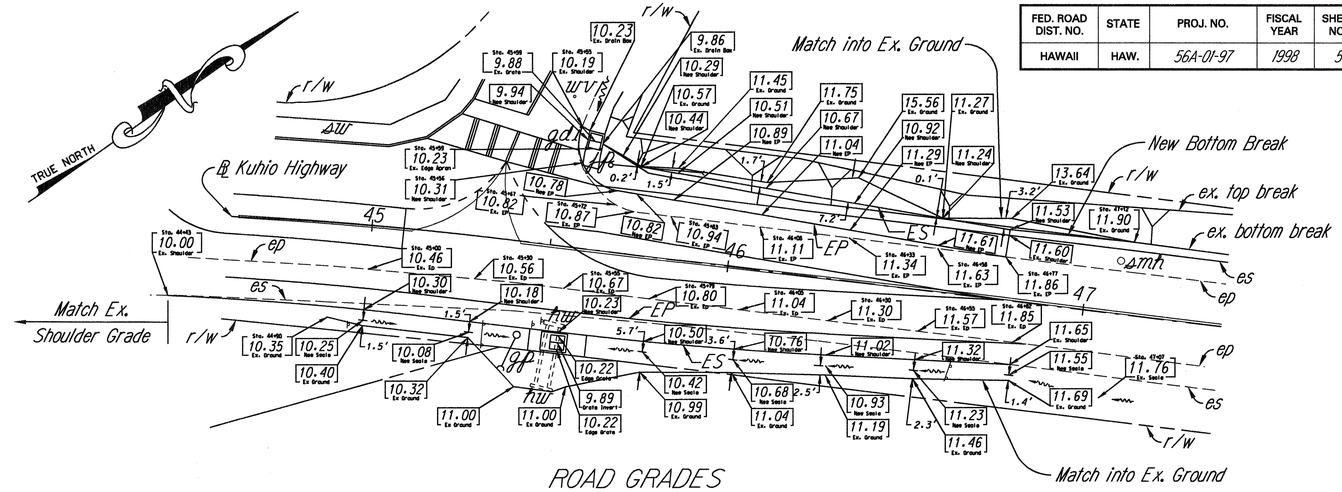

ROAD GRADES

Scale: 1" = 20'

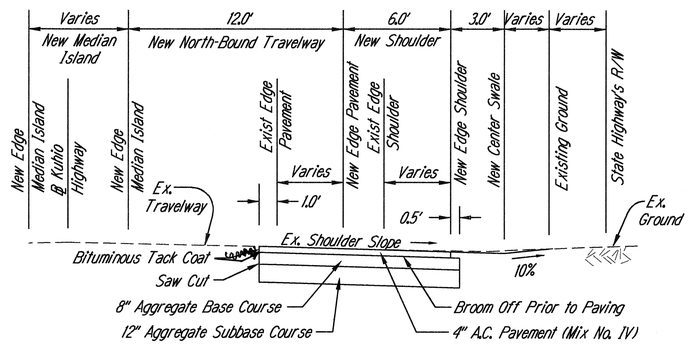

TYPICAL PAVEMENT RECONSTRUCTION
SECTION SOUTH SHOULDER

Scale: 1" = 4'

NOTE: Reinforcing Steel for Concrete Collar shall conform to the requirements of ASTM 615-Grade 60.

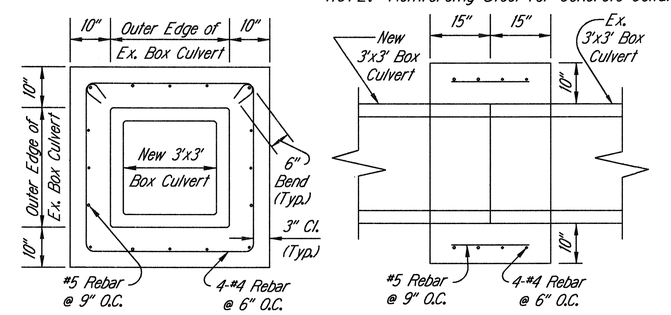

ELEVATION — SECTION

REINFORCED CONCRETE COLLAR (BOX CULVERT)

N.T.S.

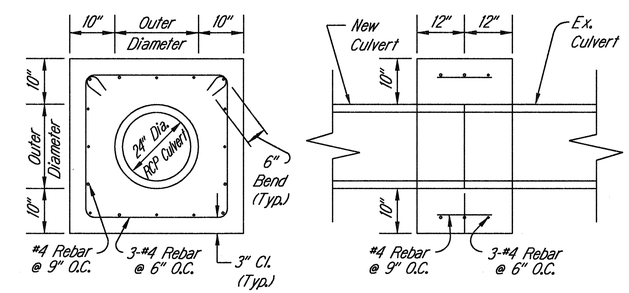

ELEVATION — SECTION

REINFORCED CONCRETE COLLAR (RCP CULVERT)

N.T.S.

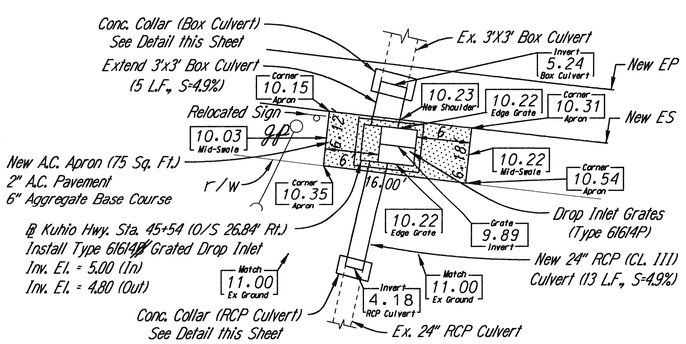

PLAN - DROP INLET INSTALLATION

N.T.S.

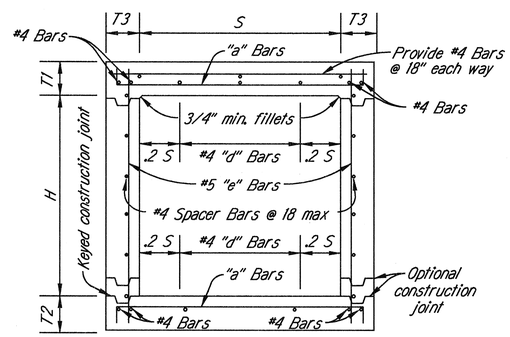

TYPICAL BOX CULVERT SECTION (3' SPAN)

N.T.S.

SPAN (S)			3'	3'	3'
HEIGHT (H)			2'	3'	3'
STRENGTH CLASSIFICATION			A	A	B
MAXIMUM FILL OVER TOP			38	38	66
Conc.	Top Slab	(T1)	6 1/4	6 1/4	8
	Bottom Slab	(T2)	6 1/4	6 1/4	8
	Sidewalls	(T3)	6	6	6
Reinforcing Steel	"a"	Size Bar #	4	4	5
		Spacing	3 1/2	3 1/2	4
		Length	4-2	4-2	4-3
	"d" Dist. Bars	Top Slab - No. of	3	3	2
		Bottom Slab - No. of	2	2	2
	"e" Bars	Spacing	18	18	12 1/2
	Spacers	Number	12	12	12
Quan.	Concrete: C.Y. per lin. ft.		23	27	31
	Reinf.: lbs per lin. ft.		34	36	46

STANFORD M. IWAMOTO
LICENSED PROFESSIONAL ENGINEER
No. 5738-C
HAWAII, U.S.A.

THIS WORK WAS PREPARED BY ME OR UNDER MY SUPERVISION.

Signature

STATE OF HAWAII
DEPARTMENT OF TRANSPORTATION
HIGHWAYS DIVISION

TYPICAL SECTIONS, ROAD GRADES, AND MISC. DRAINAGE DETAILS

KUHIO HIGHWAY,
LEFT TURN STORAGE LANE TO
HAUAALA ROAD AND KAWAIHAU ROAD
Proj. No. 56A-01-97

Scale: As Shown — Date: May, 1998

SHEET No. 1 OF 1 SHEETS

ORIGINAL PLAN — SURVEY PLOTTED BY — DRAWN BY — TRACED BY — DESIGNED BY — QUANTITIES BY — CHECKED BY — DATE — NOTE BOOK No.