FED. ROAD DIST. NO.	STATE	PROJ. NO.	FISCAL YEAR	SHEET NO.	TOTAL SHEETS
HAWAII	HAW.	HWY-K-01-96M	1996	7	9

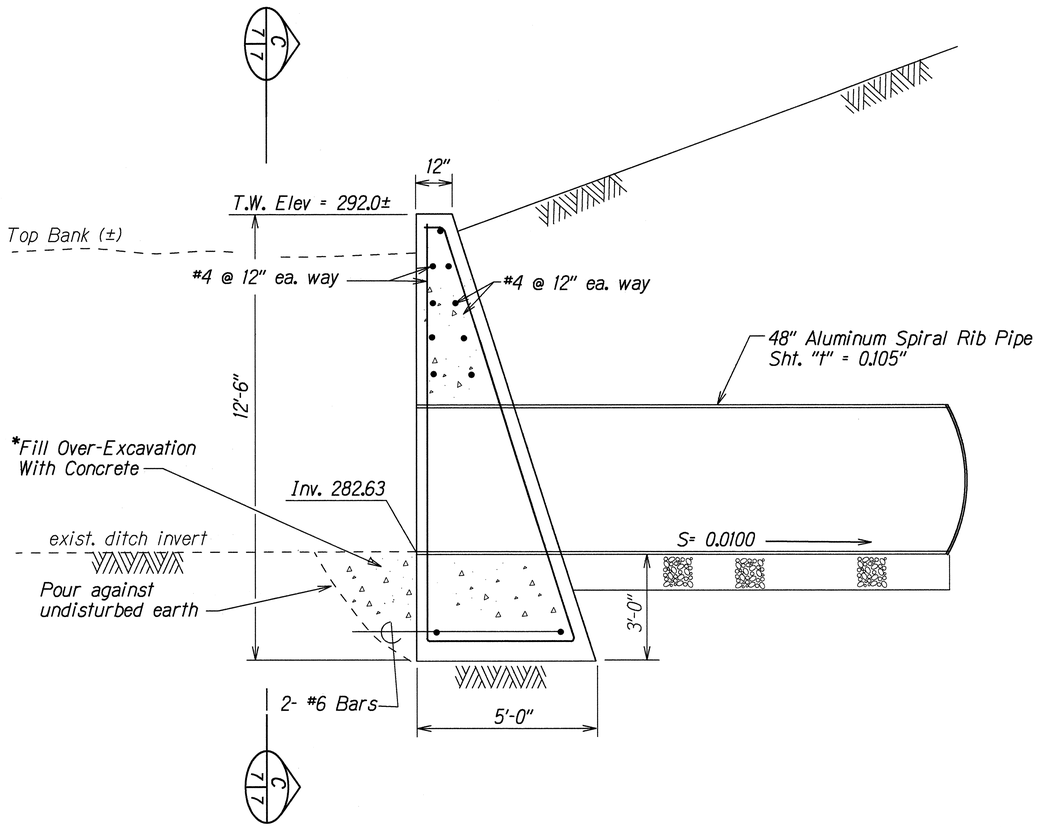

*Extra concrete shall be incidental to headwall concrete

DETAIL (3 / 4 7) (3 / 5 7)
Scale: ½" = 1'-0"

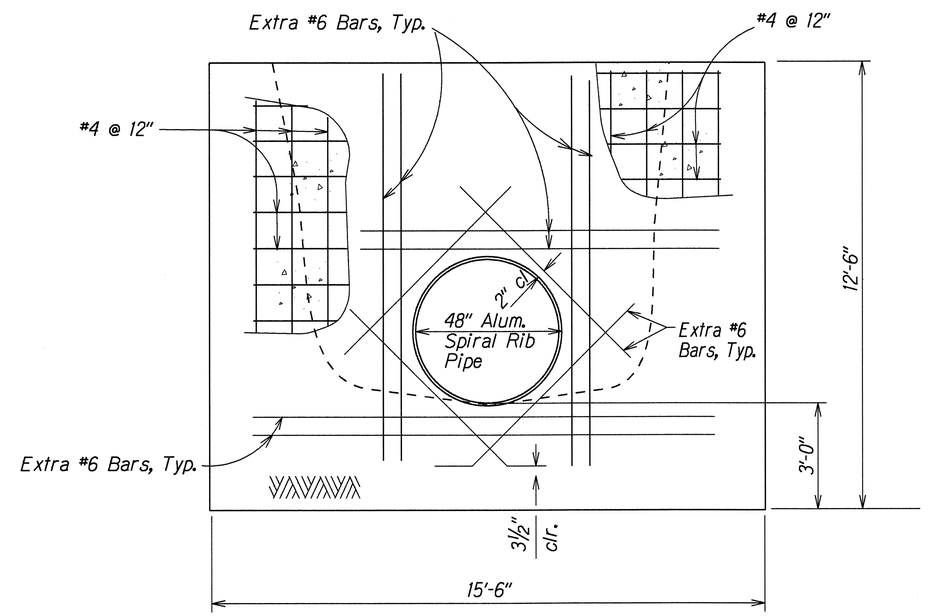

SECTION (C / 7 7)
Scale: ½" = 1'-0"

ORIGINAL PLAN	SURVEY PLOTTED BY	DATE
	DRAWN BY S.Morikawa	1/96
NOTE BOOK	TRACED BY S.Morikawa	
kel	TRANSCRIBED BY	
Kuhio04.dgn	QUANTITIES BY	
	CHECKED BY	

STATE OF HAWAII
DEPARTMENT OF TRANSPORTATION
HIGHWAYS DIVISION

HEADWALL DETAIL

(Old) Kuhio Highway
Storm Damage Repairs at Princeville
and
Kuhio Highway (24.8±)
Debris Removal at Kalihiwai
PROJECT NO. HWY-K-01-96M

Scale: As Shown Date: April, 1996

SHEET No. 2 OF 2 SHEETS