FED. ROAD DIST. NO.	STATE	PROJ. NO.	FISCAL YEAR	SHEET NO.	TOTAL SHEETS
HAWAII	HAW.	56A-01-05M	2005	24	25

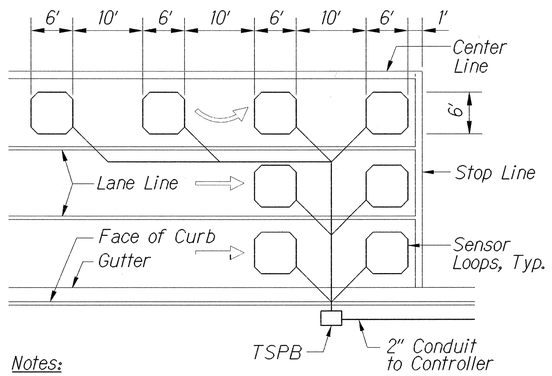

Notes:
1. Center sensor loops in lanes.
2. Collector cables shall be twisted 2 turns per foot.
3. Number of loops and locations vary. See project plans.
4. Number and locations of collector sawcuts may be varied in the field to suit.

TYPICAL SENSOR LOOP LAYOUT
Not to Scale

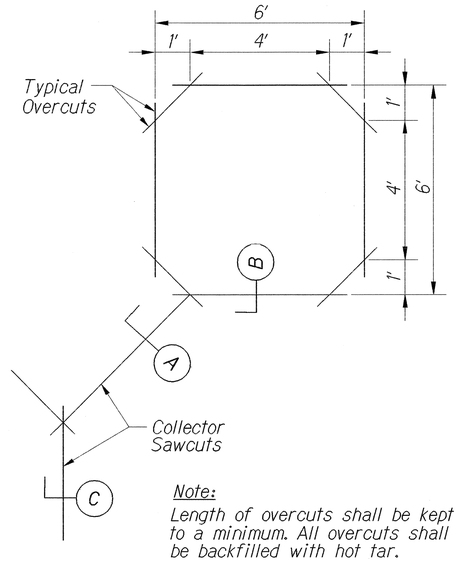

Note:
Length of overcuts shall be kept to a minimum. All overcuts shall be backfilled with hot tar.

TYPICAL SENSOR LOOP SAWCUT DETAIL
Not to Scale

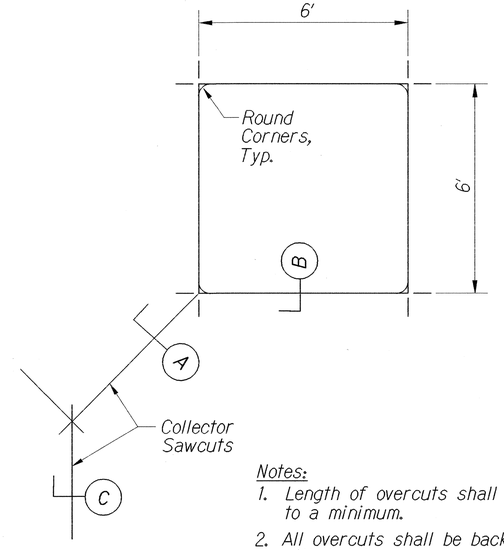

Notes:
1. Length of overcuts shall be kept to a minimum.
2. All overcuts shall be backfilled with hot tar.

ALTERNATE SENSOR LOOP SAWCUT DETAIL
Not to Scale

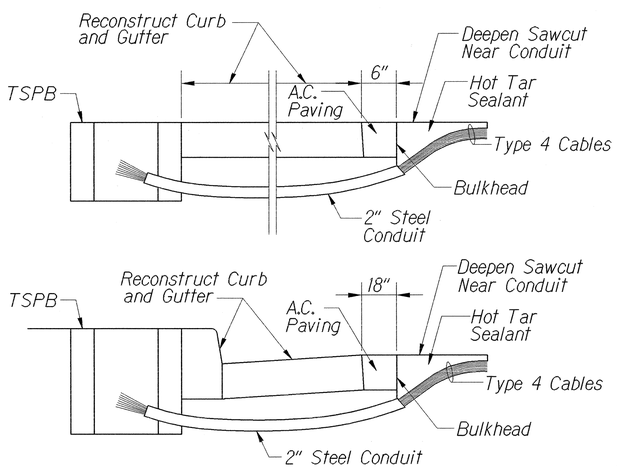

Notes on Construction at End of Sawcut:
1. Seal roadway end of conduit after installation of conductors.
2. Install bulkhead across conduit trench.
3. Place hot tar in sawcut.
4. Backfill over conduit with new a.c.
5. Reconstruct curb and gutter as required.

DETAIL OF SENSOR LOOP INSTALLATION AT EDGE OF ROADWAY
Not to Scale

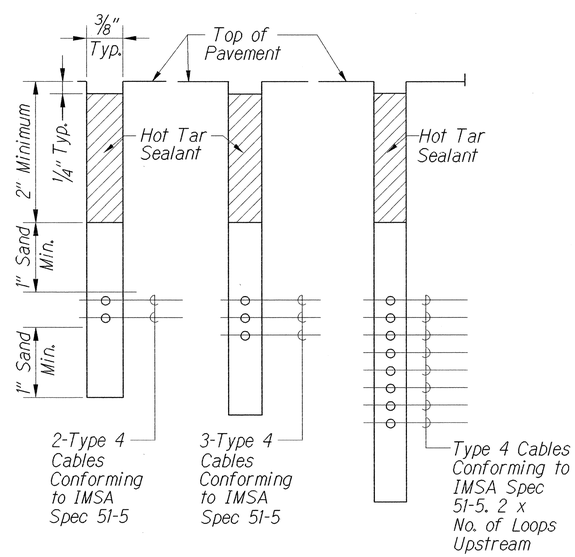

SECTION A SECTION B SECTION C

DETAIL OF SENSOR LOOP INSTALLATION AT EDGE OF ROADWAY
Not to Scale

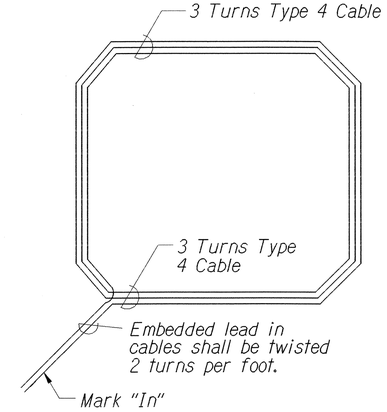

PLAN

TYPICAL SENSOR LOOP WIRING DIAGRAM
Not to Scale

ORIGINAL PLAN	SURVEY PLOTTED BY	DATE 11/04
	TRACED BY	"
	DESIGNED BY	"
NOTE BOOK	QUANTITIES BY	"
	CHECKED BY	"

APPROVED: (For Work Within County Right-of-Way Only)

County Engineer 4.28.05 Date

STATE OF HAWAII
DEPARTMENT OF TRANSPORTATION
HIGHWAYS DIVISION

MISCELLANEOUS DETAILS

KUHIO HIGHWAY RESURFACING
Inia Street to Kawaihau Road
Project No. 56A-01-05M

Not to Scale Date: April 2005

SHEET No. 1 OF 1 SHEETS